SITE INVESTIGATION/ PHASE II

VAUGHN LANDFILL/ DUKE POWER SITES

CSX REAL PROPERTIES

Greenville, South Carolina

Prepared for

CSX Transportation

Jacksonville, Florida

September 1996

APPLIED ENGINEERING & SCIENCE, INC.

Atlanta, Georgia

SITE INVESTIGATION PHASE II
VAUGHN LANDFILL/DUKE POWER SITES
CSXT REAL PROPERTIES
BRAMLETTE ROAD
GREENVILLE, SOUTH CAROLINA

CSX Project Number 9415585

Prepared for

CSX Transportation

Jacksonville, Florida

September 1996

APPLIED ENGINEERING & SCIENCE, INC.

Atlanta, Georgia

SITE INVESTIGATION PHASE II
VAUGHN LANDFILL/DUKE POWER SITES
CSXT REAL PROPERTIES
BRAMLETTE ROAD
GREENVILLE, SOUTH CAROLINA

CSX Project Number 9415585

Prepared for

CSX Transportation

Jacksonville, Florida

September 1996

APPLIED ENGINEERING & SCIENCE, INC.

Atlanta, Georgia

TABLE OF CONTENTS

APPENDICES

LIST OF TABLES (Appendix A)

LIST OF FIGURES (Appendix A)

EXECUTIVE SUMMARY

CSX Transportation (CSXT) currently owns several adjoining properties west of downtown Greenville, South Carolina. The properties consist of approximately 40 acres along the floodplain of the Reedy River. Past activities on the properties include coal gas production, railroad transportation, and landfilling. These activities, particularly coal gasification processes, have contributed a variety of contaminants that have impacted soil and groundwater in the area.

In 1994, at the direction of the South Carolina Department of Health and Environmental Control (DHEC), CSXT began an investigation into the types and extent of contamination on the CSXT properties. CSXT retained Applied Engineering and Science, Inc. (AES), an Atlanta, Georgia engineering and environmental consulting firm, to proceed with the investigation. This report describes AES's Phase I and Phase II field activities, historical research, interface with regulatory agencies, scientific literature review, and personal interviews.

Mr. Robert Vaughn, owner of Vaughn Construction and Demolition Company in Greenville, operated an unpermitted solid waste landfill on CSXT property from 1988 to 1992. Mr. Vaughn was advised in 1993 by DHEC that his filling activities were improper. In February 1994 the U.S. Army Corps of Engineers notified CSXT that it considered the property on which the fill was located to be wetlands and that the filling operation was a violation of section 301 of the Clean Water Act. The Corps of Engineers has deferred further action pending the environmental investigation required by DHEC.

AES completed Phase I of the investigation in February 1995 and submitted a report of findings to DHEC in March 1995. During Phase I, no materials were discovered in the landfill that could be directly connected to the contamination. Rather, Phase I confirmed that the fill consisted of dirt, brick, concrete, and other construction debris. Contamination from volatile and semi-volatile compounds (VOCs and SVOCs) was discovered in soils and groundwater below the landfill materials and in the floodplain east of the Reedy River. A substance that appeared to be coal tar was found in the floodplain soils. A subsequent investigation into the historical activities of the area indicated that the Duke Power Company operated a coal gasification plant at the corner of West Washington Street and Bramlette Road during the 1940s and 1950s. Wastewater containing coal tar was released from the west side of the plant. The wastewater flowed through a culvert under Bramlette Road and dispersed into the floodplain. The heavy coal tar settled in low

areas and eventually infiltrated the natural alluvial clays and sands, impacting local groundwater quality.

Following submittal of the Phase I report, DHEC requested additional fieldwork on the properties. Phase II consisted of the installation of eight monitoring wells to assess groundwater quality, an assessment of the extent of the coal tar in soil and groundwater, and a site characterization.

The information gathered during Phase II of the investigation indicates that the contaminants in soil and groundwater within the CSXT properties are the result of the release of coal tar and coal tar laden wastewater from the former Duke Power coal gasification plant. The VOC and SVOC compounds reported in the groundwater and soil samples are common byproducts of coal gasification processes.

Coal tar was found saturating soils within the former Duke Power Company plant site (DP Site) and in the floodplain west of the landfill. Soils saturated with coal tar on the DP Site will continue to affect groundwater quality and air quality to a lesser extent.

Impacted groundwater was identified from the coal gasification plant west to the Reedy River in a plume approximately 600 feet wide and 2,200 feet long. However, maximum contaminant levels (MCLs) were exceeded by a single contaminant (benzene) in only three of the eight wells. The groundwater plume appears to reach the Reedy River and may be discharging to the river. However, a surface water sample collected downstream of the contaminant plume contained no VOC or SVOC compounds. No downstream users of Reedy River water were identified, and a well survey found no drinking water wells within a 1/2 mile radius of the CSXT properties. No other contaminant pathways were identified for contaminants to migrate off site.

Free product coal tar was discovered in the deepest well (20 feet) lying on top of a low-permeability layer of saprolite. Because the free product coal tar in soil and groundwater will continue to release volatile and semi-volatile compounds to groundwater, it is recommended that the extent of free product in groundwater be delineated.

An underground storage tank (UST) and an industrial water supply well were reported to have been used at the coal gasification plant. The disposition of the UST should be determined. Geophysical methods may be used to determine whether the UST was removed or remains in place. The well is listed as abandoned. The location and condition of the well should be determined because it could provide a pathway for surface contamination into the subsurface.

I. INTRODUCTION

CSX Transportation, Inc. holds title to several properties west of downtown Greenville, South Carolina in the vicinity of Bramlette Road along the Reedy River. In 1994, at the direction of the South Carolina Department of Health and Environmental Control (DHEC), CSXT began an investigation into the types and extent of contamination on the properties. CSXT retained Applied Engineering and Science, Inc. (AES), an Atlanta, Georgia engineering and environmental consulting firm, to proceed with the investigation. This report describes activities relative to the site investigation on CSXT properties including Phase I and Phase II field activities, historical research, interface with regulatory agencies, scientific literature review, and personal interviews.

A. Site Description and History

Figures and tables in this report are included in **Appendix A**. **Figure 1 - Site Location Map** identifies the location of the property west of the City of Greenville, South Carolina. This section of Greenville (known locally as City View) includes residences, small businesses, schools, industries, and rail facilities.

Figure 2 - Site Plan is a drawing of CSXT properties north and south of Bramlette Road totalling approximately 40 acres. The properties are undeveloped except for the CSX Railroad office which is situated on the south side of Bramlette Road at the Reedy River.

The triangular property north of Bramlette Road is bordered by Bramlette Road to the south, West Washington Street to the east, and the CSX right-of-way containing the rail lines to the west. Duke Power Company, the primary electric utility provider in South Carolina, operated a coal gasification plant in the southeast corner of this property during the 1940s and 1950s. This area is referred to as the **DP Site** in this document. West of the DP Site, the property has been partially filled west to the rail lines and is overgrown with kudzu and small trees. This area contains a ditch along Bramlette Road that reportedly carried wastewater released from the coal gasification plant. This area is referred to as the **NB Site** (North Bramlette) within this document.

South of Bramlette Road, a long, narrow piece of property extends south through floodplain of the Reedy River. This property is bordered by the CSX right-of-way to the west, Greenville County School District property to the east; and Willard Street to the south. The CSX railroad office, which is used for crew transfers and scheduling activities, is located in the northwest corner of this property.

An unpermitted landfill was operated by Vaughn Demolition and Construction Company in the property south of Bramlette Road from 1988 to 1992. In 1988, Mr. Robert Vaughn attempted to purchase approximately 16 acres of the property from CSXT for the purpose of constructing a solid waste landfill. Following the payment of a deposit on the purchase, Mr. Vaughn began landfilling activities on the Site. The property transfer was never completed but unauthorized landfilling by Vaughn continued. This property is referred to as the **Vaughn Landfill Site** in this document.

The CSXT properties north and south of Bramlette Road contain the **DP Site**, the **NB Site**, and the **Vaughn Landfill Site** which were the focus of this investigation.

B. Project History

On August 24, 1994, DHEC notified CSXT by certified mail of the department's investigation of an unpermitted landfill on CSXT property in Greenville, South Carolina (Vaughn Landfill Site). DHEC, along with the US Army Corps of Engineers, had visited the site in early 1994 and noticed leachate and a black, sludge-like material at the base of the landfill. According to the letter "*The material was black with a strong petroleum odor. A similar material has been observed by Department and Corps of Engineers personnel during other site visits*". Analysis of a sample collected during the site visit

indicated that an impact to the environment had occurred. DHEC subsequently requested a work plan from CSXT to assess vertical and horizontal impact to the environment in soil and groundwater caused by the landfilling or other activities.

In October 1994, CSXT contacted AES and requested a workplan be prepared for the assessment of vertical and horizontal impact to the environment at the site.

1. Phase I - A copy of the workplan for Phase I is included in **Appendix B**. The workplan called for a series of borings to be installed in the landfill to collect soil samples from native soils beneath the fill and groundwater samples from the surficial aquifer. Sediment and surface water samples were also to be collected from the floodplain surrounding the fill. A sample of the black sludge was to be collected and analyzed. Equipment for the sample collection activities included a Strataprobe push-type sampling rig, a trackhoe for excavating impenetrable materials, and hand augers for floodplain sampling.

   Approximately seven acres of floodplain of the Reedy River have been filled with demolition debris and yard waste to a depth of up to 14 feet (the Vaughn Landfill). Excavations through the fill and borings advanced through the fill into the underlying native soils revealed the presence of a tar-like substance at the fill/soil

interface. Additional hand auger samples collected in the surrounding floodplain soils also contained tars.

Soil and groundwater samples were collected and sent to a laboratory for volatile organic compound (VOC) and semi-volatile organic compound (SVOC) analysis. Analysis of the samples indicated a band of contamination in soils trending northeast to southwest through the fill. This band extends from the floodplain northeast of the fill through the northern half of the fill material, through the southwest corner of the fill, and into the floodplain southwest of the landfill. Groundwater was encountered at or below the native soil surface. Three groundwater samples contained elevated levels of VOC and SVOC compounds. According to several chemical reference materials, many of the volatile and semi-volatile compounds reported in the samples are found in coal tars generated by coal gasification processes.

Elevated levels of lead were revealed in soil samples throughout the site. Metals levels in soil sample LF024, located in the west central section of the landfill, were especially high relative to other samples collected.

The report of Phase I findings was entitled *Site Investigation; Soil, Sediment, and Groundwater Sampling; Vaughn Landfill, CSX Real Property, AES, March 1995.* Recommendations made following the completion of Phase I included the installation of at least six monitoring wells to assess groundwater quality, excavation of sample location LF024 to investigate the cause of elevated metals concentrations in soils, and the covering of the rear uncovered portion of the landfill materials with clean soil fill.

2. Phase II - Following the review of the Phase I report, DHEC requested additional assessment of the CSXT properties including the following:

    1) Determine the extent of the tar substance.
    2) Determine the source of the tar substance.
    3) Determine the vertical and horizontal extent of groundwater contamination.
    4) Determine pathways of contaminant migration to possible receptors.
    5) Assess location LF024 for the source of heavy metals contamination.
    6) Develop a site characterization including soils, geology, hydrology, and hydrogeology.

AES prepared a workplan based on the information requested by DHEC and submitted the workplan in August, 1995. DHEC approved the workplan in

November, 1995. Copies of the DHEC correspondence are included in **Appendix C**. A copy of the Phase II workplan is included in **Appendix D**.

Three days prior to implementation of the workplan and the beginning of field activities, CSXT and AES representatives met with DHEC personnel in Greenville to discuss several issues regarding the site investigation. Those present at the meeting on March 1, 1996 were Marshall Williams, Director Environmental Real Estate Transactions, CSX/RPI; Dave Butler, Project Manager AES; Charles Bristow, Hydrogeologist, DHEC Greenville; and Tom Knight, Manager Geohydrologic Section, DHEC Columbia. Several changes and additions to the Phase II workplan resulted from this meeting that are summarized below:

1) DHEC requested that a second monitoring well screened in the upper saturated unit be placed adjacent to MW-3D. MW-3D was scheduled to be screened within the lower sand unit beneath the overlying clay. DHEC suggested that additional information could be gained by placing two wells side-by-side at separate intervals. Placement of the other wells was approved with the understanding that the location of MW-5 was dependent on the results of the coal tar delineation sampling.

2) DHEC suggested that MW-4 be advanced by hand auger in the floodplain east of the landfill to avoid disturbance of possible wetland habitat with a full size drill rig.

3) DHEC requested that the groundwater samples collected from the wells installed within the landfill be analyzed for sulfate as well as VOCs and SVOCs.

4) DHEC suggested that a biological survey be conducted within the floodplain areas affected by coal tar contamination to assess the effects of contaminants on plant species number and diversity.

5) DHEC requested that the landfill be reseeded following completion of grading activities to inhibit erosion of the landfill soils into the surrounding floodplain.

CSXT and AES agreed to the above changes but requested additional time to complete items 4 and 5 to allow for scheduling, performance and reporting. DHEC concurred with this request.

Implementation of the workplan began at the Greenville site on March 4, 1996. This report summarizes the findings of the Phase II field activities including well installations, groundwater sampling, site characterization, and a biological survey.

II. SITE CHARACTERIZATION

A. Topography

The city of Greenville lies in the piedmont province of the southeastern United States. The piedmont is characterized by rolling hills, uplands, and stream valleys which contain narrow floodplains. The general flow pattern of streams is to the southeast. Greenville county lies within the Santee River basin which includes several sub-basins such as the Reedy River basin.

The CSXT properties border the Reedy River and lie, to a large extent, within the river's floodplain. The floodplain and potential wetlands (*wetlands on the site have not been formally delineated by the Corps of Engineers*) are at an elevation of 285 feet above mean sea level (msl). Local surface flow is toward the Reedy River. Much of the local floodplain topography has been altered by human activities.

B. Geology and Hydrogeology

Bedrock west of Greenville consists of granite gneiss. Piedmont soils in the southeast commonly form from the deterioration of bedrock by chemical weathering. Saprolite is

the term given to decomposed rock which has not been transported. Rock structures are still visible in saprolite but the texture is similar to that of loose soil. The saprolite is then eroded and deposited forming the alluvial soils along river floodplains. The soils vary from fine to coarse depending on the depositional environment.

According to the *Soil Survey of Greenville County*, prepared by the Soil Conservation Service of the USDA, soils underlying the CSXT properties include Cartecay, Chewacla, and Cecil-Urban series types. Cartecay soils consist of alluvium on floodplains and are usually sandy loams. Chewacla soils are also found on floodplains and consist of the finer deposits of silty clay loams. Chewacla soils are considered hydric which is one characteristic of wetland environments. Cartecay and Chewacla soils are commonly intermixed on floodplains as stream channels migrate and floodwaters rise and recede. The floodplain soils surrounding the landfill south of Bramlette Road are a classic example of this intermixing.

The thickness of the soils and saprolite overlying bedrock in the Greenville area has been reported at an average of 58 feet. The report entitled *Groundwater Resources of Greenville County South Carolina*, published in 1968 by the South Carolina State Development Board, lists seven industrial wells within 1/4 mile of the CSXT properties. All seven of the wells were reported as destroyed or abandoned. The wells were installed

with casings varying in length from 10 feet to 41 feet below the surface. Well casings usually extend from the surface into bedrock to prohibit loose soils from entering the well, so casing length can be an indicator of the thickness of unconsolidated materials. Bedrock at the site is therefore expected to be within 40 feet of the surface. However, no borings were advanced to bedrock during either phase of the investigation. Therefore, the actual depth to bedrock is unknown.

One of the seven industrial wells was located at the Duke Power Site. The well was 298 feet deep in the fractured granite gneiss and yielded 50 gpm. The location of this well and the method of abandonment should be determined to assess whether the well presents a pathway for contaminant migration into the bedrock aquifer.

Near the Reedy River, the water table is close to or above land surface and is visible as surface water south of Bramlette Road. Borings on the CSXT properties indicate the water table to be within five feet of the natural surface. Because of the variation in soil types across the properties from fine-grained clay to coarse grained sands, permeabilities and hydraulic conductivity also vary. Wells installed during the investigation yielded flows of at least 1 gallon per minute (gpm) during development and were not stressed. Water levels were measured and compared to the surveyed top-of-casing elevations and indicate a groundwater flow direction from northeast to southwest toward the Reedy

River. Well installations and the hydrogeology of the site are discussed in more detail in Section V.

C. Surface Flow

During a day of heavy rains, AES personnel followed the paths of surface runoff over the CSXT properties from the DP Site, west along Bramlette Road, through the Vaughn Landfill Site and south through the floodplain to Willard Street and the Reedy River. **Figure 3 - Surface Flow** is a diagram of the overall surface flow patterns as well as localized surface flows and ponding in depressions. Photographs of surface flow patterns are included in **Appendix E**.

1. DP Site - The grade of the surrounding area is generally to the southwest with localized variations. Stormwater enters the DP Site from the upgradient direction along West Washington Street and to a lesser degree, from the adjacent property to the north (Suburban Propane). The two primary entry points appear to be at the east gate and north of the east gate approximately 43 feet south of the property boundary.

Runoff at the east gate flows west and collects in a depression in the north central portion of the site following heavy rainfall. Soils in this area of the site contain a high proportion of coal tar and vegetation is sparse. Strataprobe and hand auger sampling here revealed water saturated conditions in the upper 1 foot of soil. Standing water in this area is probably common during the winter and early spring.

North of the east gate, runoff flows west from West Washington Street under the fence and into a man-made ditch that carries surface flow toward the north central sector of the site. The ditch contains trash and debris brought in with the stormwaters. Where the ditch ends, the flow spreads laterally and settles in depressions or enters the larger ponded area in the unvegetated section. Because of the site topography, there appears to be no exit from these depressed areas except during exceptionally heavy rainfall at which time flow would be to the southwest. Surface water eventually infiltrates the soil or evaporates.

Precipitation falling on the southeast and south central sectors flows west\southwest and exits at the south gate onto Bramlette Road or settles in a depression near MW-7. This depression also collects surface flow from the northwest sector. Soils surrounding MW-7 contain coal tar but vegetation is present and odors are less apparent than in the northeast sector. Precipitation falling on the extreme

southwest corner of the DP Site flows west off the site and enters Ditch 1 which flows west along Bramlette Road.

2. NB Site - Ditch 1 to the west of the DP Site may be fed by a spring which discharges groundwater from the DP Site and the filled area north of the ditch. Water in the ditch flows west to a point approximately 340 feet from the DP Site fence where the water appears to enter a culvert underneath Bramlette Road. The culvert is not visible because of the overlying sediments and vegetation. Water is visible discharging south of Bramlette Road as an upwelling in the floodplain.

3. Vaughn Landfill Site - Water discharging in the floodplain south of Bramlette Road spreads south and collects behind the landfill which acts as a dam to the natural flow. Surface flow from the higher elevations to the east also enters this area. A narrow channel (Ditch 4) cut through the landfill allows the water to flow west.

Ditch 2 carries water south from the rail lines north of Bramlette Road into a culvert beneath the road. The water then enters Ditch 3 which runs between the landfill and the filled area which contains the CSX office. Flow from Ditch 3 then enters the floodplain west of the landfill joining the flow of Ditch 4.

The floodplain west of the landfill contains standing water for most of the year. Water here is prevented from entering the Reedy River by the elevated embankment which carries the north/south rail lines paralleling the river. However, Ditch 5, which appears to be a man-made canal, directs water from the floodplain south toward Willard Street. Just north of Willard Street, the ditch turns west and passes underneath the railroad trestle where it discharges into the Reedy River. *This appears to be the only discharge point for surface flow from the CSXT properties east of the Reedy River.*

D. Human Activities

Much of the floodplain along the Reedy River has been altered by human activities for many years. Aerial photographs from the 1950s reveal tilled fields for crops along the river. As time passed, industry replaced the crops. Much of the floodplain was filled in the past to accommodate the construction of rail lines, mills, and residences.

The property north of Bramlette Road has been almost completely filled above the original floodplain elevation during activities over the last 100 years. The southeast corner of this property (DP Site) was the site of the Duke Power coal gasification plant which closed in 1959. A trucking company used the lot for parking trailers during the 1970s. The DP

Site is now vacant and access is controlled by a fence topped with barbed wire. North of the coal gas plant, Texas Oil Company operated a petroleum bulking facility at the same time as the coal gas plant operated. That site now contains Suburban Propane, a propane tank storage facility. The remaining property has been filled but is otherwise undeveloped.

South of Bramlette Road, the CSXT property is largely native floodplain and has only recently received fill as the Vaughn landfill was constructed. Adjacent properties east of the landfill were filled for construction of the Greenville Sanitation Commission building and for residences along Temple Street and Walnut Street. A man-made canal (Ditch 5), that may have been dug early this century following construction of the embankment that carries the rail lines, drains the floodplain from north to south. The embankment prevented the natural flow of surface water from the floodplain into the Reedy River and the canal was apparently constructed to direct flow south to a culvert that intersects the Reedy River at Willard Street. The filling of the property has been discontinued. No other activities occur on the site except for the railroad related activities at the CSX office.

E. Biological Survey

A biological survey was requested by DHEC following approval of the original workplan for Phase II of the investigation. The purpose of the survey was to assess the effects of coal tar contaminants on the diversity and number of plant species within the seasonally flooded environment adjacent to the landfill. Soil samples previously collected by AES provided the analytical data necessary to compare plant species diversity to the concentrations of contaminants.

The survey was conducted by the Environmental Corporation of America (ECA) of Alpharetta, Georgia. Five plots were selected within the floodplain west of the Vaughn Landfill. Sample plots were chosen on the basis of soil sample data availability and the similarity of environmental characteristics (sunlight exposure, water depth, water temperature, and plant community structure) between the plots. The plots included drainage channel habitat as well as floodplain habitat. Plant species within each plot were identified and counted.

Following the collection of field data, a series of linear computer models were constructed to determine positive or negative correlations between contaminant concentrations and plant diversity. According to the ECA report, *at a confidence level of 95%, no significant*

negative correlations were found to exist between organic compounds in the soils and the prevalence of plants in the sample plots. A positive correlation, however, was found between some species and the presence of organic compounds where these plants were more abundant in plots with contaminated soils.

A copy of the complete ECA report is included in **Appendix F - Biological Survey**.

III. EXTENT OF COAL TAR

This section describes the horizontal and vertical delineation of the coal tar extent in soils within the DP Site, the NB Site, and the Vaughn Landfill Site. The effects of the coal tar on groundwater are described in Section V.

A. Sample Locations, Sampling Protocol

Sample locations for Phase II were chosen based on the results of the February 1995 Phase I site investigation and historical information related to the operations of the coal gasification plant. Efforts were made to determine the vertical and horizontal extent of the coal tar or other hydrocarbon substances in soils and groundwater.

Soil samples were collected using two methods. Push-type technology (Strataprobe) was used wherever the locations were accessible by the four-wheel drive vehicle. Hand-augers were used in less accessible overgrown areas within the DP Site or in the flooded sections of the Vaughn Landfill Site. Continuous samples were collected beginning at the surface until either coal tar was detected or saturated conditions were reached. The depths, soil characteristics, and presence or absence of detectable coal tar were noted in the field logbook. All sample locations were marked with an alpha-numeric designation

and flagged stake. Downhole sample equipment was decontaminated between each hole.

Moving outward from obvious or known contamination, samples were collected and field screened visually and by odor. If coal tar was clearly visible or coal tar odor was detected, no sample was collected for laboratory analysis. Exceptions were several samples which were analyzed to assess the concentrations of coal tar compounds within heavily affected areas. If samples exhibited no detectable signs of coal tar or other hydrocarbon, representative soils were placed in clean glass containers for shipment and laboratory analysis to confirm the absence of coal tar substances. Photographs of the soil sampling are included in **Appendix E.**

B. Duke Power Site

Delineation of the extent of coal tar began at the suspected source; the site of the former Duke Power Company coal gasification plant. **Figure 4 - Duke Power Site Plant Detail** is a diagram of the Duke Power Site based on the drawing provided by Duke Power that indicates the former locations of plant buildings. A reconnaissance of the site revealed large amounts of brick, metal, wood and other construction debris and several concrete and brick foundations. Apparently, the coal gasification plant buildings were demolished and partially buried on site following closure of the plant in 1959.

Brush, small trees, and debris were cleared from several areas to allow access of sampling equipment. The clearing revealed the presence of two heavily stained areas. **Figure 5 - Coal Tar Extent; Duke Power Site** indicates the two heavily affected areas, the sample locations, and the extent of coal tar. **Table 1** on **Figure 6** includes a summary of the laboratory analytical results of each sample collected.

The first affected area surrounds MW-7. Soils within a fifty-foot radius of the well are discolored and exhibit a moderate coal tar odor. A split-spoon sample, labeled DP1A, collected during the installation of the monitoring well, was analyzed for VOCs and SVOCs. Laboratory results of DP1A indicated several volatile and semi-volatile compounds including PAHs associated with coal tar with concentrations up to 48,000 ug/kg. According to former employees of the coal gasification plant and the detail of the plant provided by Duke Power Company, the relief holder and several tar wells were located in the vicinity of MW-7. Wastewater which contained coal tars was released into a drainage ditch west of this area.

As borings were installed by Strataprobe in an expanding radius from MW-7, soils beneath the fill materials were found to contain varying amounts of coal tars from the surface to the saturated zone. Laboratory analysis of sample DP9, collected west of the gas holder foundation, revealed several PAHs with concentrations up to 22,000 ug/kg.

Sample DP14 was collected east of the gas holder foundation and field screened. No coal tars were detected. Laboratory analysis of DP14 confirmed the absence of coal tar compounds.

Other samples collected along the east side of the property also appeared free of coal tars until the second heavily affected area was encountered beginning at the east gate. This area covers approximately one acre extending west from the east gate and was notably devoid of vegetation. The area is in a topographic depression where surface flow collects and either evaporates or infiltrates the soil. Soils were dark with coal tar and exhibited a strong coal tar odor. Two samples were collected in this area; DP17 was field screened to assess soils close to the fence; and DP29 in the center of the affected area was analyzed by the laboratory to determine the magnitude of coal tar compound concentrations. Coal tar was detected in DP17 visually and by odor to a depth of 3 feet. DP29 was collected by hand from surface soils. Laboratory analytical results of DP29 indicated several PAHs with concentrations up to 72,000 ug/kg. According to the plant detail, a purifying box and oil scrubber were located in this area. A reference on coal gasification plant operations explains that purification of the coal gas involved the removal of toxic substances such as hydrogen sulfide and cyanide. Cooling of the gases before scrubbing resulted in the condensation of coal tars. It is assumed that coal tars were released into the soils in this area during the cooling and scrubbing operations.

Several samples were collected north of the heavily affected area including DP25, DP26, DP27, and DP28. Field screening revealed no coal tar in these samples. Laboratory analysis of DP26 and DP28 indicated benzene (7 ug/kg) and naphthalene (20 ug/kg) in DP28 and trichloroethene (94 ug/kg) in DP26. Benzene and napthalene are componenents of coal tar. Because levels of compounds reported in these samples are relatively low, the northern boundary of the coal tar extent (Figure 5) has been drawn along a line extending through these sample locations.

Additional borings, field screening, and laboratory analysis of collected samples revealed coal tar extending northwest from the heavily affected area in decreasing concentrations. Samples DP23, DP21, and DP18 revealed no coal tars present and laboratory analysis confirmed the absence of VOC and SVOC compounds.

As can be seen in **Figure 5**, the coal tar extends in a broad band across the DP Site. Two heavily affected areas lie in the northeast and the southwest portions. Coal tar was found in the soils throughout this band from the surface down to groundwater which ranged from a few inches to six feet below the surface. Coal tar compounds include benzene, toluene, ethylbenzene, xylenes, naphthalene, chrysene, pyrene, anthracene, and several other PAHs.

Notably absent from the analytical reports during Phase II were acetone and methylene chloride, which were frequently reported in samples collected during Phase I of the site investigation. As suggested by AES in the initial report following Phase I, it appears that the presence of acetone and methylene chloride were caused by laboratory contamination, not because of their actual presence in the soils.

During the clearing and soil sampling at the DP Site, a tanker truck and three petroleum storage tanks were discovered. Photographs of the tanker truck and the storage tanks are included in **Appendix E**. According to Mr. Gordon Brown, who supervised gas plant operations in the 1940s and 1950s, no tanker truck was used on the site. He did not remember any above-ground-storage tanks in use on site but did report the existence of an underground storage tank toward the south side of the plant that held heating oil for the plant (see Figure 4). He did not know whether the UST had been removed following the closure of the plant.

The tanker truck body appears to have been on the site for some time. Before the area was cleared by the loader for the site investigation, the truck was overgrown with brush and small trees. The tanker is covered with what appears to be asphalt and may have been used for road paving. The words "ASSOCIATED PETROLEUM CARRIERS,

SPARTANBURG SC" are faintly visible on the side. The top of the tanker is open and no liquids can be seen, at least in that section.

Two of the storage tanks are approximately the same size (600 gallons), and one is slightly smaller and is crushed. All three tanks exhibited punctures and no liquids were observed or odors noted. No identifying marks or plates could be found on the tanks.

C. NB Site

The ditch that carried wastewater from the coal gasification plant is still visible west of the fence which surrounds the DP Site. The ditch has been designated Ditch 1 on **Figure 6 - Coal Tar Extent in Soil. Figure 6** illustrates the extent of coal tar found in soils over the entire CSXT property. Ditch 1 parallels Bramlette Road and enters a culvert which lies beneath the road approximately 340 feet west of the DP Site. The culvert is no longer visible because of the buildup of sediments and debris on both sides of the road. However, water can be seen discharging south of Bramlette Road in the area directly opposite a southward turn in the ditch.

Borings were advanced by Strataprobe north of Ditch 1 (NB1 and NB2) and south of the ditch just west of the DP Site (NB3 and NB4). Hand-auger borings were advanced within

the ditch along its length. As at the DP Site, no samples were collected for laboratory analysis if coal tar was detected visually and/or by odor. The exception was at location NB8 where a sample was analyzed in the laboratory to verify the presence and assess concentrations of coal tar compounds. Sample locations are identified on **Figure 6**.

NB1 was advanced 8 feet west of the DP Site fence and 60 feet north of Ditch 1. Much of this area has been filled since the coal gas plant closed in the late 1950s. The sample was collected by split spoons in native soil at depths of 9-12 feet. No coal tar was visible but a slight coal tar odor was detected in the gray silty clay. Laboratory analysis confirmed the presence of coal tar compounds at concentrations up to 2,000 ug/kg.

NB2 was advanced along the north edge of the ditch approximately 200 feet west of the DP Site fence. Repeated borings with the Strataprobe push rods produced very little or no recovery of soils. Soils were extremely soft, wet clays or clean sand and exhibited no coal tar or coal tar odor. Insufficient soils were recovered to collect a sample for laboratory analysis.

NB3 was advanced 10 feet south of the ditch within 10 feet of the DP Site fence. Soils from the surface to 3 feet were loamy silty clay and exhibited a slight coal tar odor. No sample was collected for laboratory analysis.

NB4 was advanced 25 feet south of NB3 toward Bramlette Road. Soils here also contained slight amounts of coal tar and exhibited a coal tar odor.

Samples NB5 through NB9 were advanced by hand auger within and along the length of Ditch 1 from west of the DP Site fence to the culvert at Bramlette Road. Coal tar was identified by field screening in all samples. Sample NB8 was sent to the laboratory for analysis to confirm the presence of coal tar compounds. Several coal tar compounds were reported in NB8 including benzene (6,500 ug/kg), ethylbenzene (11,000 ug/kg), toluene (17,000 ug/kg), xylenes (total; 32,000 ug/kg), anthracene (1,400,000 ug/kg) chrysene (980,000 ug/kg), naphthalene (5,800,000 ug/kg), and pyrene (2,600,000 ug/kg). A summary of all compounds reported in sample NB8 and other soil samples is included in **Table 1 - VOC and SVOC Compounds in Soil Samples** which is included on **Figure 6**. Complete data summaries and laboratory analytical reports are included in **Appendix G - Laboratory Analytical Reports**.

The presence of coal tar substances in Ditch 1 supports the reports of former coal gasification plant employees that the ditch received wastewater containing coal tar from the back of the plant. According to the employees, wastewater was released to the ditch daily over a twenty year period and possibly longer.

D. Vaughn Landfill Site

The Vaughn Landfill lies south of Bramlette Road in a seasonally inundated floodplain of the Reedy River. Most of the six-plus acre landfill lies on CSXT property but portions extend over the eastern property boundary onto property owned by the Greenville County School District. The discharge point for Ditch 1, which carried coal gasification plant wastewater, is south of Bramlette Road on County property (see Section II-C; Surface Flow). No investigation was conducted on properties not owned by CSXT. However, sample WE001, collected in 1995 before a property survey was completed, indicated the presence of coal tar compounds on County property east of the landfill.

Samples collected in 1995 below the fill materials and within the floodplain west of the landfill revealed the presence of coal tar compounds. Samples collected during Phase II were planned to determine the extent of coal tar. Samples were collected by hand auger in the seasonally flooded area west of the landfill. When coal tar was detected in the soils, flags were placed at that location. Confirmatory samples were collected at WW10, WW11, and WW12 and were analyzed by a laboratory. WW13 was collected at a later date to supplement data collected for the biological survey. Samples were analyzed for VOCs and SVOCs. Coal tar compounds were reported in samples WW10, WW11, and WW13. No coal tar compounds or other contaminants were reported in WW12.

Figure 6 indicates the extent of coal tar found during Phase II. It appears that as coal tar contaminated wastewater entered the floodplain south of Bramlette Road, the wastewater spread southwest across the floodplain. Aerial photographs of the area taken in the 1950s during gas plant operations indicate the presence of two ponds approximately 700 feet south of Bramlette Road at what is now the southwest corner of the Vaughn Landfill. The ponds are now within the seasonally flooded area west of the landfill. Several samples collected in the area of the ponds, including WW002 collected in 1995, revealed the presence of coal tar in the soil, in some places in layers several inches thick. Much of the coal tar entering the floodplain south of Bramlette probably flowed into the ponds and settled at the bottom.

A man-made ditch (Ditch 5) is also visible in the aerial photographs extending from just south of Bramlette Road, through the ponds, and to the south where the ditch turns to the west toward the railroad trestle at Willard Street. The ditch still exists but is covered at the northern end by the landfill. Sample WW11, collected in Ditch 5 at the south end of the landfill, contained coal tar. Coal tar compounds were reported following laboratory analysis of the sample. Sample WW12 was collected in the ditch approximately 240 feet south of WW11. No coal tar was observed in WW12 and laboratory analysis indicated no coal tar compounds present. An intermediate boring between WW11 and WW12 contained visible coal tar. The ditch apparently drained the ponds as it does the floodplain

today and coal tars were transported and deposited along the length of the ditch in decreasing concentrations.

E. Coal Tar Extent Summary

Coal tar contamination in soils is present throughout much of the Duke Power Site from the surface to the water table with two heavily affected areas in the northeast portion and the southwest portion of the property. No coal tar was discovered in the southeast and northwest corners of the site. The NB Site contained coal tar in Ditch 1 along its length from the DP Site fence to the culvert which flows under Bramlette Road. A broad band of coal tar extends across the Vaughn Landfill Site with it's long axis oriented northeast to southwest. A heavy accumulation of coal tar was detected within the floodplain in the area of the former ponds west of the landfill. No coal tar was detected in soils south of the band.

IV. SOURCE OF THE COAL TAR

Duke Power Company operated a coal gasification plant at the corner of West Washington Street and Bramlette Road for many years during the 1940s and 1950s. A diagram of the former plant was provided to CSXT by Duke Power and the plant details are shown on **Figure 4**. Two former employees of the plant, Mr. Gordon Brown, a superintendent, and Mr. George Washington, a fireman, described during telephone interviews and a site walk the locations of plant buildings and operations at the plant. They also described the discharge of coal tar in a wastewater stream at the back of the plant.

Subsurface investigations at the site of the former plant (DP Site) revealed the presence of extensive tars, ash, and discolored soils throughout much of the site. Photographs of the affected areas are included in **Appendix E**. Push-type technology (Strataprobe) was used to collect soil samples throughout the site as described in Section III. Coal tars were found in an area as highlighted in **Figure 5**.

Several aerial photographs of the area west of the city of Greenville were obtained from the US Agricultural Stabilization and Conservation Service (ASCS). These photographs were taken over a period from 1951 to 1989 and include the properties which contained the former coal gasification plant and the Vaughn Landfill. Photos taken during the 1950s

show the coal gasification plant in operation. West of the plant along Bramlette Road and east of the Reedy River and a railroad bridge, a small stream or ditch is visible which appears to flow south underneath Bramlette Road and continue in a southerly direction through the property on which the landfill now lies (Vaughn Landfill site). Investigation of the extent of the coal tar indicated a westward path along Bramlette Road in a ditch behind the plant. Flow from the ditch crossed Bramlette into the floodplain of the Reedy River, spreading across the floodplain and settling in several low areas or ponds. A survey of the landfill site done in 1989, which was provided to AES by Mr. Robert Vaughn, also indicates the presence of this stream. If wastes from the coal gasification plant were released to the environment, this stream could have provided a pathway for the wastes to enter the landfill property.

It is evident from the extent of the coal tar, the location of the former coal gasification plant, interviews with former employees of the plant, and aerial photographs that the source of the coal tar is the former Duke Power coal gasification plant at the corner of West Washington Street and Bramlette Road.

V. EXTENT OF GROUNDWATER IMPACT

Eight monitoring wells were installed during Phase II to assess the impact to groundwater quality from coal tar or other contaminants. The initial placement of six wells was proposed in the workplan to assess groundwater quality in the upgradient and downgradient directions from known coal tar soil deposits. Well locations were chosen using the site topography and surface water flow directions as well as the location of the Reedy River to determine local gradient. Following discussions with DHEC personnel in a meeting in Greenville (meeting described in Section I) prior to implementation of the approved workplan, a seventh well was added within the landfill adjacent to MW-3D to assess the upper formation at that location. An eighth well was added at the Duke Power Site to assess groundwater quality at the source of the coal tar.

Seven of the wells were to be screened in the surficial aquifer. One was to be installed as a deep well screened in the sand unit below the upper clay formation or at thirty feet, whichever was reached first. All wells were to be developed and groundwater samples collected and analyzed for VOCs and SVOCs.

A. Well Installations

Groundwater Protection, Inc. (GPI) of Pineville, North Carolina, a South Carolina certified driller, was retained by AES to install seven of the eight monitoring wells at the site. AES was to install MW-4 by hand auger as suggested by DHEC. AES and GPI reviewed the proposed well locations, installation specifications, site parameters, the health and safety plan, and the CSX Railroad safety guidelines for contractors operating on CSX property. Drilling began on Monday, March 11, 1996.

Monitoring well locations are shown on **Figure 7 - Extent of Groundwater Contamination**. Well construction diagrams and boring logs are included in **Appendix H - Well Construction Diagrams**.

1. MW-7 - The location for MW-7 was based on the grade within the DP Site and the presence of coal tar contamination in the soils at that location. A Strataprobe boring at that location (DP1) had revealed coal tar in the soil from the surface to the water table at approximately 6 feet. During the drilling of the well, a split spoon sample was collected at a depth of 5 to 7 feet to assess the concentrations of coal tar compounds in the soils. The sample was labeled DP1A and sent to the laboratory for analysis (see Section III-B for analytical results).

To use a full 10-foot screen while ensuring a tight seal at the surface of the well, an 8-inch diameter borehole was advanced to 15 feet and the screen was placed from 5 to 15 feet. Screen size was 2-inch diameter, 0.020" slot size PVC construction. A seven foot PVC riser was added to the top of the screen to allow 2 feet of stickup above the surrounding ground surface. A 20 - 40 graded silica sand pack was installed in the annular space up to 3 feet below the surface. Bentonite pellets were poured above the sand pack in a 1 foot layer as a seal. A bentonite/portland cement grout filled the remaining annular space to the surface and a reinforced concrete pad 2 feet x 2 feet was constructed around the well. A protective steel enclosure with a locking swivel cap was set into the pad and the well was labeled with an adhesive aluminum label inscribed with the well ID, depth, water level and other construction details. The well was developed by GPI using a Whale pump for 1 hour. Fifty gallons of groundwater were removed and stored in a 55-gallon drum.

2. MW-1 - MW-1 was installed in the northeast corner of the Vaughn Landfill to assess groundwater quality entering the CSXT property at that point. The landfill materials were drilled through to a depth of 8 feet where split spoon sampling commenced to assess native soils at that location. Silty clay was found beneath the fill material from 8 to 10 feet. Silty micaceous sand was found below 10 feet to

the final well depth of 15 feet. Coal tar was not observed in the drill cuttings but both the clay and the sands exhibited a strong coal tar odor.

Construction details for MW-1 are the same as for MW-7 with a 10-foot screen set from 5 to 15 feet below the surface. The screened interval covers both the clay and sand formations as well as 3 feet of the fill materials. The water level in MW-1 was taken after 24 hours of stabilization and was measured at 7.12 feet below the top of casing or approximately 5 feet below the landfill surface.

3. MW-2 - MW-2 was installed west of the landfill adjacent to the CSX office. Augering proceeded through the soil fill to 5 feet where split spoon sampling began. Silty clays were found from 5 to 11 feet. Silty sand was found from 11 to 15 feet. No coal tar or coal tar odor was detected. The well was set with the screened interval from 5 to 15 feet. Other construction details are similar to those for MW-1 and MW-7. The water level after 24 hours was found to be 10.3 feet below the top of casing.

4. MW-3 - MW-3 was installed at the request of DHEC as a shallow well to complement the deep well (MW-3D). Both MW-3 and MW-3D are located within the landfill north of the ditch which bisects the fill material. During construction

of MW-3D, it was discovered that the clay layer below the fill extended to approximately 15 feet where a silty sand was encountered. MW-3 was constructed with the bottom of the screen set at 14 feet to remain within the clay. A 5-foot screen was used which covered the interval from 9 to 14 feet. The sand pack filled the annular space from 7 to 14 feet. A 2-foot bentonite seal reached from 5 to 7 feet and the cement/bentonite grout filled the remaining space to the surface. The well was completed with a concrete pad and protective steel enclosure.

The water level after 24 hours was measured at 10.65 feet below the top of the casing.

5. MW-3D - MW-3D was installed as the deep well within the lower sand formation which lies beneath the upper clay that covers most of the floodplain. After augering through the fill material with 14-inch augers, continuous split spoon samples were collected from 10 feet to 16 feet to determine the interface between the clay and sand which was found at approximately 15 feet. Augering then continued to 14.5 feet and an 8-inch PVC casing was set to seal off the upper formation from the lower sand. Continuous split spoon samples were then collected from 16 feet to 20 feet where the silty sand graded to a stiff saprolite. A 3-inch layer of coal tar was discovered in the split spoon sample from 16 to 18

feet. The split spoon sample from 18 to 20 feet also contained coal tar in sandy silt which graded to a stiff saprolite. The borehole was then drilled out with 8-inch augers to 20 feet and a 5-foot screen was set from 15 to 20 feet. The sand pack was installed from 15 to 20 feet and the bentonite seal was set from 13 to 15 feet. A cement/bentonite grout was poured in the remaining annulus to the surface and the well was completed with concrete pad and protective steel enclosure. The water level 24 hours after development reached 10.55 feet below the top of the casing.

6. MW-4 - DHEC suggested the installation of MW-4 by hand auger to avoid disturbance of the floodplain with a full size drill rig. MW-4 was installed by hand auger east of the landfill to a total depth of 7 feet. Soils from the surface to 1 foot consisted of loamy clay. Remaining soils consisted of varying silts, sands, and clays to 7 feet. No coal tar or coal tar odor was detected in the soils. The water table was reached within 1 foot of the surface. A 5-foot PVC screen was installed from 2 to 7 feet and a 5-foot PVC riser brought the casing to 3 feet above the surface. A sand pack was set from 1 to 7 feet and a bentonite pellet seal was placed in the remaining space to the surface. The well was developed by hand using a disposable PVC bailer. Approximately 10 gallons of water were removed

from the well. The water level was measured within 24 hours at 4.65 feet below the top of the casing.

7. MW-5 - MW-5 was installed southwest of the landfill along the CSX right-of-way which borders the landfill property. The drill rig first augered through the fill dirt used to elevate the rail lines. Split spooning began at approximately 5 feet. Loamy clay was discovered from 5 to 9 feet followed by quartz mica sand to 14 feet. No coal tar or tar odor was detected in the soils. A 10-foot PVC screen was set from 4 to 14 feet with a riser of 6 feet. The sand pack was set from 3 to 14 feet followed by the bentonite pellet seal from 2 to 3 feet. A cement/bentonite grout filled the remaining annular space to the surface and the well was completed with a concrete pad and protective steel enclosure. The well was developed for 1 hour 15 minutes using a Whale pump which removed approximately 40 gallons of water. The development water was pumped into a 55-gallon drum which was sealed and labeled. The water level 24 hours after development was measured at 9.48 feet below the top of the casing.

8. MW-6 - MW-6 was installed at the southwest end of the landfill through the fill material. Eight feet of fill material were augered through and split spoon samples were collected to determine the stratigraphy from 8 to 12 feet. Soils beneath the

fill material consisted of greenish black clay containing coal tar and a strong coal tar odor. A 10 foot PVC screen was set from 2 to 12 feet. The sand pack was set from 2 to 12 feet topped by a 1 foot thick bentonite seal and 1 foot of cement/bentonite grout. The well was completed with a reinforced concrete pad and protective steel enclosure. The well was developed with the Whale pump for 25 minutes and 30 gallons of water were pumped into a 55-gallon drum. After allowing for stabilization, the water level was measured at 11.0 feet below the top of the casing.

9. Derived Wastes - Well development water and drill cuttings were managed according to guidelines set forth in the *Monitoring Well Approval* form received from DHEC as a supplement to the Workplan Approval letter. Development water and drill cuttings were placed in clean 55-gallon drums, labeled as to contents, date, and potential hazards if any, and stored in a central location on the landfill for eventual disposal.

B. Groundwater Sampling

1. Sampling Procedures - Sampling of the monitoring wells was conducted on March 13, 1996. The wells were sampled within 24 hours following development.

Sampling was performed according to EPA protocol as specified in the *Standard Operating Procedures and Quality Assurance Manual*, dated February 1991 and the AES *Field Operations Manual*, dated May 1995.

Samples were labeled, placed in coolers, and shipped under chain-of-custody to American Environmental Network (AEN), formerly ATI in Pensacola, Florida. AEN is a CSXT approved and South Carolina DHEC certified laboratory.

2. Free Product - To determine whether free product was present in the wells, a Solinst Model 121 Interface Meter was lowered through the well casings and the water levels and level of free product, if any, were logged. Wells MW-3, MW-3D, and MW-6 exhibited strong coal tar odors during construction, development, and sampling. However, only MW-3D was found to contain measurable free product.

Free product coal tar at the bottom of MW-3D was measured at 2.75 inches thick 2 weeks after construction of the well. A split spoon sample collected during installation of the well revealed a distinct 3-inch layer of the coal tar in sandy soils between 16 and 18 feet below the surface. A subsequent split spoon sample collected from 18 to 20 feet was composed of sandy silt grading into saprolite (weathered rock). Sands in the second split spoon sample also contained coal tar

but the saprolite appeared nearly dry and free of coal tar. From this evidence, it appears that the coal tar is flowing through the sand unit along the top of the impermeable saprolite, at least in the area of MW-3D. Ground surface at MW-3D is the top of the landfill, which is approximately 11 feet thick at this location. This means that the saprolite surface is approximately 7 to 9 feet below the natural land surface.

C. Laboratory Analytical Results

Groundwater samples were analyzed for VOCs (EPA method SW-846 8260) and SVOCs (EPA method SW-846 8270 BN Extractables). Groundwater samples collected from the three wells installed in the landfill (MW-3, MW-3D, and MW-6) were also analyzed for sulfates as requested by DHEC. Sample results from the Phase I and Phase II groundwater samples are summarized in **Table 2 - Volatile and Semivolatile Compounds in Groundwater Samples** which is included on **Figure 7**. The table also includes the Maximum Contaminant Levels (MCLs) for each compound listed in the document *Drinking Water Regulations and Health Advisories* prepared by the U.S. Environmental Protection Agency (EPA) published in May 1995. Copies of the complete analytical reports are included in **Appendix G - Laboratory Analytical Reports**.

In the descriptions that follow, the compound with the highest reported concentration has that concentration in parentheses following the compound. Compounds that exceed the Maximum Contaminant Levels (defined as the "Maximum permissible level of a contaminant in water which is delivered to any user of a public water system" by the USEPA, May 1995) are noted below.

1. MW-1 - Several semi-volatile compounds were reported in the groundwater sample collected from MW-1 including acenapthene, fluorene, 2-methylnapthalene, napthalene (4,600 ug/l), and phenanthrene. These compounds are commonly associated with coal tar. None of the compounds reported exceeded MCLs.

2. MW-2 - No volatile or semi-volatile compounds were reported above laboratory detection limits for groundwater sample MW-2.

3. MW-3 - VOC compounds reported in groundwater sample MW-3 included benzene (160 ug/l), ethylbenzene, styrene, toluene, 1,2,4-trimethylbenzene, 1,3,5-trimethylbenzene, m,p-xylene, and o-xylene. SVOC compounds reported included acenapthene, acenapthylene, fluorene, 2-methylnapthalene, napthalene (15,000 ug/l), and phenanthrene. The concentration of benzene (160 ug/l) exceeded the MCL (5 ug/l). Sulfate was reported at 640 mg/l.

4. MW-3D - VOC compounds reported in sample MW-3D included benzene (1,100 ug/l), ethylbenzene, isopropyl benzene, styrene, toluene, 1,2,4-trimethylbenzene, 1,3,5-trimethylbenzene, m,p-xylene, and o-xylene. SVOC compounds reported included 2-methylnapthalene and napthalene (8,300 ug/l). Benzene exceeded the MCL. Sulfate was reported at 35 mg/l.

5. MW-4 - No VOC or SVOC compounds were reported above laboratory detection limits for the groundwater sample collected from MW-4.

6. MW-5 - No VOC compounds were reported above laboratory detection limits for the groundwater sample collected from MW-5. One SVOC compound was reported; napthalene at 12 ug/l.

7. MW-6 - VOC compounds reported in sample MW-6 included toluene, 1,2,4-trimethylbenzene, and m,p-xylene (10 ug/l). SVOC compounds reported included acenapthene, acenapthylene, anthracene, dibenzofuran, fluoranthene, fluorene, 2-methylnapthalene, naphthalene (1,800 ug/l), phenanthrene, and pyrene. No compounds reported exceeded MCLs. Sulfate was reported at 160 mg/l.

8. MW-7 - Benzene (680 ug/l) was the only VOC compound reported in sample MW-7. SVOC compounds reported included 2-methylnapthalene, and naphthalene (1,900 ug/l). Benzene exceeded the MCL.

Concentrations of benzene exceeded the MCL in groundwater samples MW-3, MW-3D, and MW-7. Groundwater samples LF023A, LF025A, and LF027A, collected during Phase I, also contained benzene concentrations exceeding the MCL. The concentration of benzo(a)pyrene exceeded the MCL (2 ug/l) in groundwater sample LF023A (10 ug/l).

D. Discussion

Analysis of groundwater samples collected from the monitoring wells indicates that volatile and/or semi-volatile compounds have been detected in groundwater samples from six of the eight wells. Samples from monitoring wells MW-1, MW-3, MW-3D, MW-5, MW-6, and MW-7 contain VOC and/or SVOC compounds. The groundwater sample from MW-5 contained naphthalene at 12 ug/l but no other compounds were reported above detection limits in that well. Groundwater samples collected from monitoring wells MW-2 and MW-4 contained no VOC or SVOC compounds above detection limits.

Most of the compounds reported in the groundwater samples have been associated with coal tar wastes. BTEX compounds and PAHs are the most common compounds found in coal gasification plant residuals according to several sources referenced (see bibliography). As coal tar infiltrates soils and reaches the water table, dissolution of the tar begins and the individual compounds may be spread through the aquifer by advection and/or diffusion. Advection means that the dissolved contaminants are carried along by the movement of the groundwater through the aquifer matrix. Diffusion is the movement of ionic or molecular constituents by kinetic activity. An example of diffusion is the dispersion of dissolved salt (sodium and chloride ions) in a standing glass of water. Volatile compounds that are less dense than water, such as benzene and toluene, may rise to the surface of the water table, or become adsorbed to soil particles, or may rise through the unsaturated zone to volatilize into the atmosphere. The more dense, non-aqueous phase liquids (DNAPLs), which comprise the largest percentage of the coal tar, may migrate downward by gravity until a low permeability surface (such as a bedrock surface) is encountered. The coal tar may then follow this surface to pool in depressions or may infiltrate fractures and continue to move downward. **Table 3 - Physical Characteristics of Constituents** lists those compounds most frequently identified in the samples and their physical characteristics including specific density. If the density of a substance is greater than 1.00 g/ml (density of water) and the concentrations exceed solubility in water, the

substance will sink. As is evident from the table, many of the compounds comprising the coal tar are more dense than water.

A potentiometric surface map represents the gradient of hydraulic head in an aquifer. Ideally, the wells used to determine the potentiometric surface should be screened within similar lithologic units and at the same depth. The eight wells installed on CSXT property are screened within 20 feet of the surface but are within or cross different lithologic units. The native soils below the fill materials and within the floodplain vary from dense clays to silty clay loams to sandy silts to sandy loams. These units vary in thickness from a few inches to several feet. The interface between two units may be abrupt, as in MW-3D where the dense clay changes to sand within a 6-inch interval. This variation is representative of alluvial soils in floodplains and depressions as stream channels have meandered across the floodplain over time depositing a range of sediments. Delineating separate aquifer zones in alluvial deposits is a difficult process and is often speculative. Units in a floodplain environment tend to be discontinuous and hydraulically interconnected. Therefore, although hydraulic conductivity probably varies vertically and horizontally from unit to unit, AES considers the saturated zone above the saprolite surface to be one hydraulically connected unit for purposes of this investigation.

As expected from the local topography, groundwater flows from northeast to southwest toward the Reedy River. Water levels in the eight wells on CSXT property decrease in elevation from northeast to southwest from MW-7 to the MW-5. The potentiometric surface, represented by bold contour lines on **Figure 7**, was prepared from the results of water level measurements taken with a Slope Indicator Company water level indicator marked in 1/100th foot increments. Water levels were measured from the top of the well casings. Casing elevations were surveyed in relation to a USGS datum at the Norfolk Southern Rail bridge at West Washington Street. Elevations are reported in feet (to the nearest hundredth foot) above mean sea level.

The estimated extent of horizontal groundwater contamination is represented on **Figure 7**. The contaminant plume reaches from the DP Site southwest to the Reedy River in a long narrow band. Usually following a release of contaminants, the highest concentrations of individual compounds in a groundwater plume are found at the source of the contamination, in this case the DP Site, and concentrations decrease downgradient. Over time, the higher concentrations may be found downgradient as the contaminant plume migrates in the direction of groundwater flow. Because much of the coal tar was released in wastewater at the back of the coal gasification plant and apparently settled in the floodplain south of Bramlette Road, much of the impact to groundwater has probably occurred from coal tars within the floodplain. This may be the reason that the highest

concentrations of groundwater contaminants were found in monitoring wells MW-3 and MW-3D (Vaughn Landfill Site), while groundwater samples from MW-7 at the DP Site contained lower concentrations. The migration rates of coal tar constituents that vary because of differences in solubility and sorption characteristics may also affect contaminant concentrations.

It is expected from the presence of naphthalene in MW-5 that the contaminant plume reaches the Reedy River and may be discharging to the river. However, a water sample collected in the river downstream of the plume contained no detectable concentrations of contaminants.

Because free product was found in only one well (MW-3D), no estimate of the extent of the free product layer has been shown.

VI. LOCATION LF024

The workplan called for the excavation of landfill soils at location LF024 where a Strataprobe sample collected in 1995 revealed elevated levels of heavy metals including lead (1,538 mg/kg), barium (557 mg/kg), cadmium (40.4 mg/kg), and chromium (79.9 mg/kg).

During Phase II, location LF024 was excavated with a trackhoe to attempt to uncover the source of heavy metal contamination. Excavated materials included soil, brick, concrete, wood, and metal. Included with the metal were several lengths of piping such as that connected to petroleum storage tanks, a crushed 55-gallon drum, and a small tank (approximately volume 10 gallons). **Photograph 34, Appendix E** is a picture of the excavated materials. The tank contained liquid which appeared to be primarily water with a sheen and slight petroleum odor. A sample of the liquid was collected and laboratory analyzed for VOCs. Sample results of G-Tank1 included concentrations of chloroethane (22 ug/l), 1,1-dichloroethane (15 ug/l), and xylenes (18 ug/l). These concentrations are below regulatory limits and are inadequate to determine the contents of the tank. Unsuccessful attempts were made to identify the purpose of the tank.

No definitive source of the metals contamination was found during the excavation. A soil

sample collected from the base of the fill materials in native soil (at the same depth as the 1995 sample) was analyzed by the laboratory for RCRA metals. Concentrations of metals reported included lead (21 mg/kg), barium (190 mg/kg), and chromium (42 mg/kg). Sample results are included in **Appendix G**. These concentrations are consistent with concentrations reported from other samples collected in 1995 and are comparable to background metal concentrations of soils in the northwest piedmont of South Carolina. The elevated metals levels reported in the 1995 sample may have been the result of an isolated zone of metals contamination caused by the leaching of metals from debris in the landfill.

VII. CONTAMINANT PATHWAYS

Possible contaminant pathways considered for migration of the volatile and semi-volatile compounds reported in soil and water samples included air, soil, and water.

A. Air

Volatilization of many of the coal tar compounds including benzene, toluene, ethylbenzene, and xylenes may be still occurring even though the coal tars have been in the soils for over 50 years. Following the disturbance of the soils at the Duke Power Site during clearing for Phase II, a coal tar odor was detected which was noticeable off the site in the surrounding neighborhood. However, soil concentrations of VOCs are relatively low (< 50 ppm) and the concentrations of VOCs in air are expected to be very low.

B. Water

VOCs and SVOCs were reported in groundwater samples collected from six monitoring wells. As discussed in Section V, dissolution of the coal tar begins with its contact with water. However, many of the coal tar compounds, particularly the PAHs, have low

solubilities and enter the dissolved phase at a low rate. The volatile compounds with higher solubilities enter the dissolved phase more rapidly.

Mobility of the coal tar and dissolved constituents varies between the DNAPLs and the lighter volatile compounds. Because the coal tars pool in depressions at the bottom of more permeable units, a smaller surface area of the coal tar is available for dissolution and many of the lighter compounds are locked up with the more dense fraction. Once individual compounds are released by the tar, they may adhere to the soil matrix by adsorption. Research indicates that much of the contamination introduced to subsurface systems is held by adsorption, especially in clays. Anaerobic conditions in a floodplain environment inhibit natural attenuation of contaminants. This may explain why volatile compounds are still found in the coal tar contaminated soils and groundwater after aging for over 50 years.

1. Free Product - The extent of free product coal tar has not been delineated. Free product was found in MW-3D between 18 and 20 feet at the overburden/saprolite interface and is most likely following the top of the saprolite surface and collecting in depressions.

At this point, there is no evidence of the migration of the free product plume off the CSXT properties. No free product was found in monitoring wells other than MW-3D. Additional investigation is necessary to assess the extent of the free product coal tar plume.

2. Groundwater - The VOC and SVOC compounds reported in groundwater samples are compounds dissolved from the coal tar. The estimated extent of the contaminant plume formed by these compounds is shown on **Figure 7**. Because of the presence of naphthalene (12 ug/l) in MW-5, and the extent of coal tar found in the floodplain soils west of the landfill, the plume has been shown as reaching the Reedy River. The discharge point of groundwater from the shallow saturated zone within the CSXT properties is expected to be the river, therefore, it is likely that contaminants in groundwater are discharging to the Reedy River. Again, no VOC or SVOC compounds were reported in surface water sample Reedy 2, collected downstream from the plume, but dilution of contaminants may be so great at that point that detection is unlikely and water quality in the river is not affected.

3. Surface Water - Surface water may carry contaminants in solution downstream. As described in Section IID - Surface Flow, precipitation falling on the CSXT properties eventually enters the floodplain east of the Reedy River and flows

through Ditch 5 to enter the Reedy River at Willard Street. This is the only known point of exit for surface flow from the CSXT properties. Sample FD1, collected from surface water in the ditch before it turns west at Willard Street, was analyzed for VOC and SVOC compounds. No compounds were detected by the laboratory. Another sample (WD1) was collected from a smaller ditch which carries runoff from Willard Street. This ditch enters Ditch 5 as it turns west. No VOC or SVOC compounds were detected in WD1 although an oil sheen was visible on water in the ditch. The sheen is probably from street runoff.

C. Soil

Soil contaminated by coal tar was found to be areally extensive within the CSXT properties. Soil contamination would also be expected to be found within the Greenville County School District Property east of the Vaughn Landfill Site.

Coal tar is relatively heavy and migrates downward into soil pore spaces and other openings. No free coal tar was observed at the surface at the DP Site but was found saturating the soils at two locations. Migration of coal tar off the site may still occur as the coal tar and related compounds enter groundwater and are transported downgradient.

Some dissolution of coal tar compounds may occur as surface water flows over the site soils.

At the Vaughn Landfill Site, the coal tar in soils is either covered by the landfill materials or is under water in the floodplain. Migration of the coal tar and related compounds is by dissolution into surface water or groundwater and by gravity deeper into the soil matrix.

There are currently no on-going earth disturbing activities on the CSXT properties that would transport contaminated soil from the sites.

VIII. CONCLUSIONS AND RECOMMENDATIONS

The information gathered to date indicates that the contaminants in soil and groundwater within the CSXT properties are the result of the release of coal tar and coal tar laden wastewater from the former Duke Power coal gasification plant. Soils saturated with coal tar on the DP Site represent a source of contaminants that may continue to affect groundwater quality and air quality to a lesser extent.

Because the free product coal tar in soil and groundwater will continue to release volatile and semi-volatile compounds to groundwater, it is recommended that the extent of free product in groundwater be delineated. The free product coal tar may be following the saprolite surface. The delineation of the saprolite surface by geophysical methods would normally be recommended to assess the potential sites of free product pooling and migration direction. However, the local topography, which includes extensive seasonally flooded areas and heavy undergrowth, would inhibit the execution of a geophysical survey. Split spoon samples collected in a grid by push-type technology such as a Geoprobe may be the most effective method of delineating the free product plume.

The groundwater plume appears to reach the Reedy River and may be discharging to the river. However, a surface water sample collected downstream of the contaminant plume

contained no VOC or SVOC compounds. No downstream users of Reedy River water were identified and a well survey found no drinking water wells within a 1/2 mile radius of the CSXT properties. The contaminant plume does not appear to have moved off CSXT property in the fifty years since the coal gas plant ceased operations, and there is no evidence of impact to downstream users. Additional monitoring of groundwater quality in the eight monitoring wells may be appropriate.

The underground storage tank (UST) and the industrial water supply well on the DP Site may represent sources or pathways for contaminants. The disposition of the UST should be determined. Geophysical methods may be used to determine whether the UST was removed or remains in place. The well is listed as abandoned. The location and condition of the well should be determined because it could provide a pathway for surface contamination into the subsurface.

Materials in the Vaughn Landfill do not appear to contribute significantly to the contamination at the site. The small tank found in location LF024 in the landfill contained concentrations below regulatory limits of several compounds.

There is no evidence to suggest that activities conducted by CSXT have contributed to the contamination on the properties.

BIBLIOGRAPHY

Manning, John C. Applied Principles of Hydrology. Columbus: Merril, 1987.

Cherry, John A., R. Allen Freeze. Groundwater. Englewood Cliffs: Prentice-Hall, 1979

Koch, Neil C. Groundwater Resources of Greenvile County South Carolina. Bulletin No. 38. Columbia: State Development Board, 1968.

Office of Water-United States Environmental Protection Agency. Drinking Water Regulations and Health Advisories. Washington: E.P.A., May 1995.

Applied Engineering and Science, Inc. Monitoring Well Installations and Soils Investigation-CSX Transportation. Atlanta: A.E.S., July 1993.

United States Dept. of Agriculture Soil Conservation Services. Soil Survey of Greenville County, South Carolina. Washington: U.S. Dept. of Agriculture, 1972.

Cahal, Donald I., Gary K. Speiran. Impact of Discharges From Point and Nonpoint Sources On Water Quality of the Upper Reedy River Near Greenville, South Carolina. U.S. Geological Water Survey-Water Resources Investigations Report No. 83-4054. Columbia: U.S. Dept. of Interior, 1983.

Applied Engineering and Science, Inc. Soil, Sediment, and Groundwater Sampling-Vaughn Landfill CSX Real Property. Atlanta: A.E.S., March 1995.

Nelson, Edward C., et al. "Chemical Characterizatioin of Coal Tar-Water Interfacial Films." Environmental Science and Technology. Vol. 30 No. 3, 1996: 1014-1022.

Lee, Linda S., Itaru Okuda, P. Suresh C. Rao. "Equilibrium Partitioning of Polycyclic Aromatic Hydrocarbons From Coal Tar Into Water." Environmental Science and Technology. Vol. 26 No. 11, 1992: 2110-2115.

Luthy, Richard G., Catherine A. Peters. "Coal Tar Dissolution in Water-Miscible Solvents: Experimental Evalution." Environmental Science and Technology. Vol. 27 No. 13, 1993: 2831-2843.

Alexander, Martin. "How Toxic Are Toxic Chemicals in Soil?" Environmental Science and Technology. Vol. 29 No. 11, 1995: 2713-2717.

Anastos, G.J., et al. "Town Gas Plants-History, Problems, and Approaches to Study." Site Discovery and Assessment. ?: 93-96.

Dzombak, David A., et al. "Remediating Tar Contaminated Sols at Manufactured Gas Plant Sites." Environmental Science and Technology. Vol. 28 No. 6, 1994: 266 A-276 A.

APPENDIX

APPLIED ENGINEERING AND SCIENCE, INC.
ATLANTA, GEORGIA

A

Notes

APPENDIX A

FIGURES AND TABLES

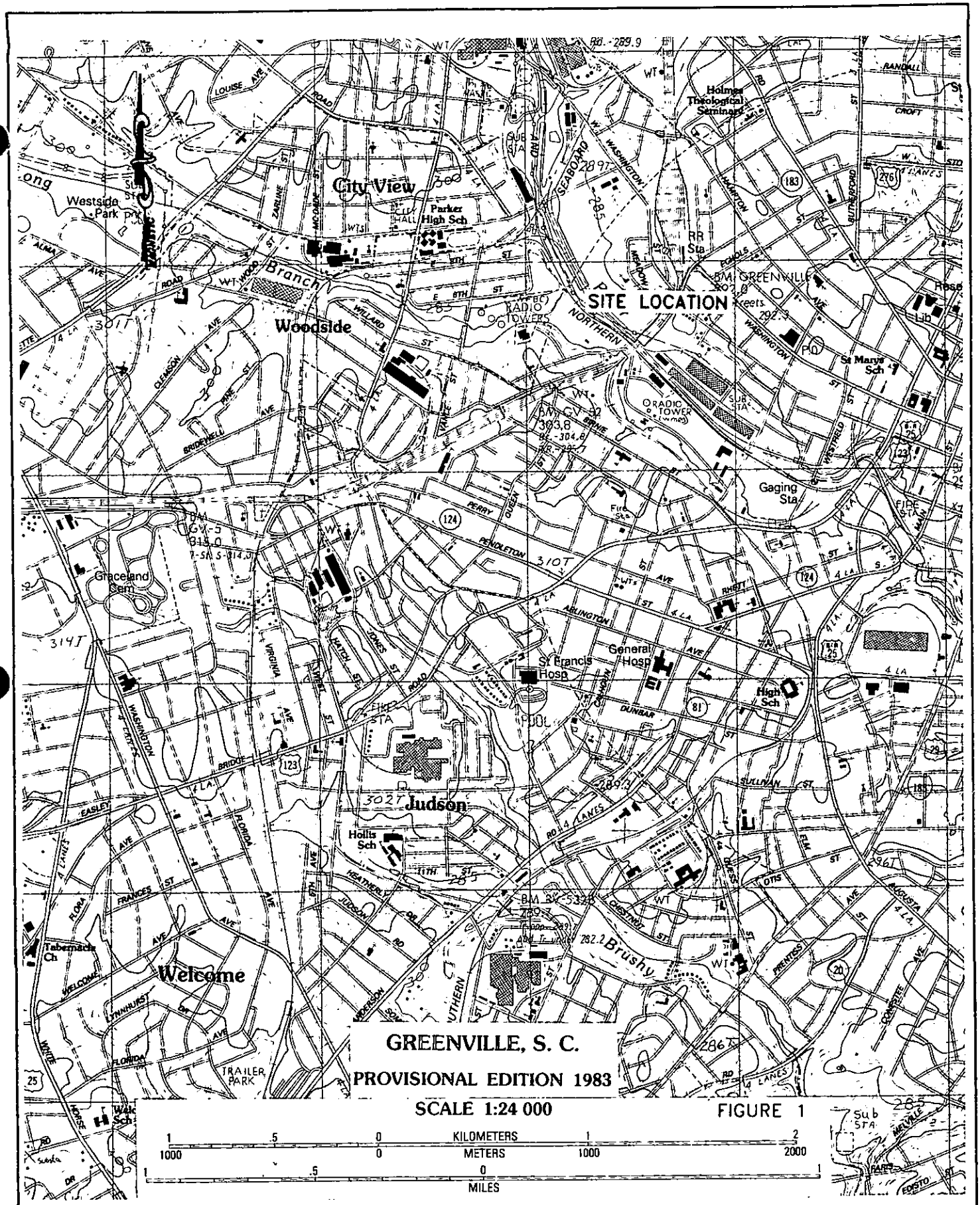

SCALE AS SHOWN	Applied Engineering & Science	SITE LOCATION MAP CSX GREENVILLE, S.C.	DATE DEC. 1992
DWN. BY SAA			DWG. NO. 2278 A
CHK'D. BY GEW			SHEET NO.
APPR. BY GEW			

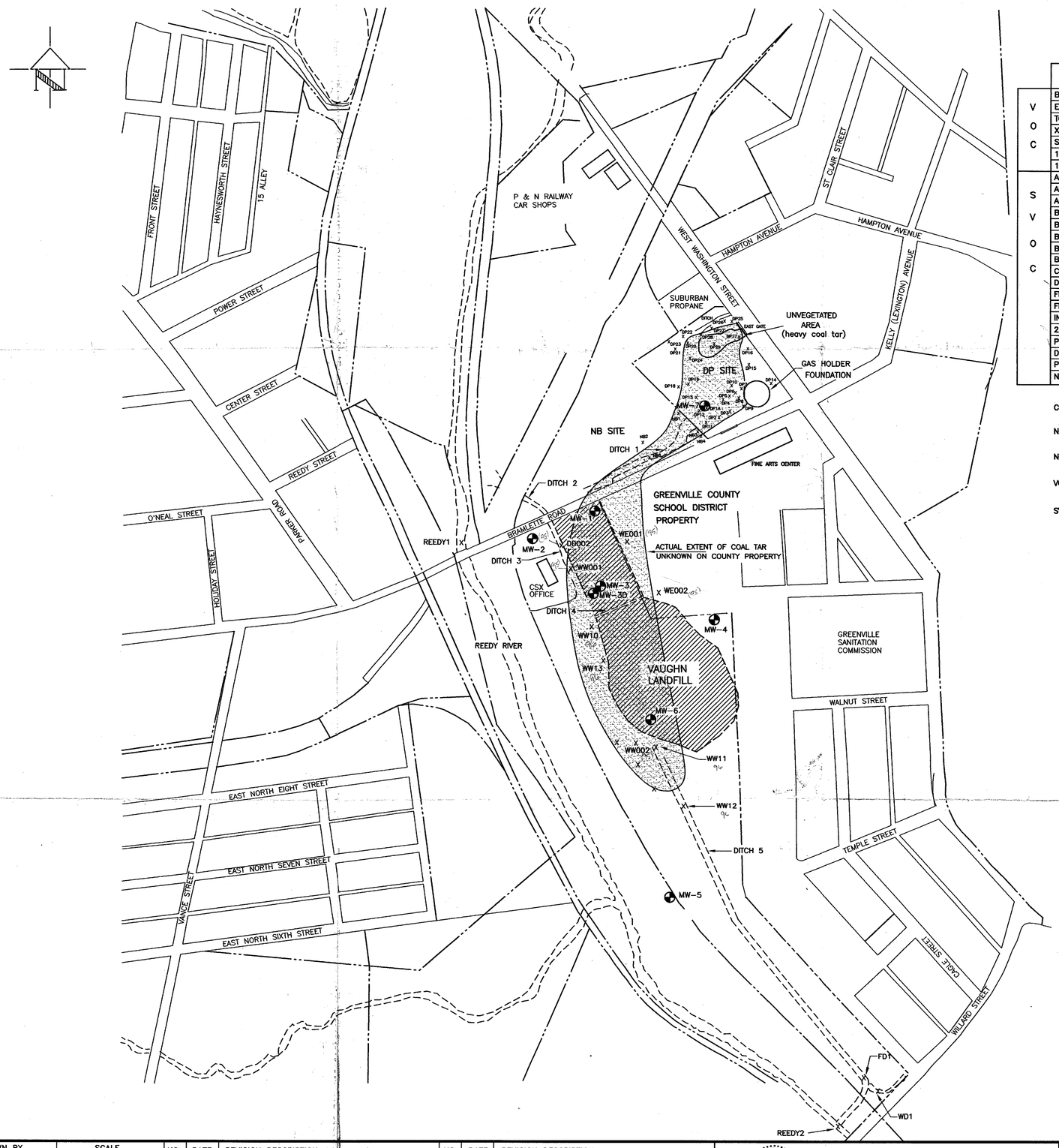

TABLE 1
VOLATILE AND SEMI-VOLATILE COMPOUNDS IN SOIL SAMPLES

	COMPOUNDS	1996 SAMPLES																1995 SAMPLES					
		DPIA	DP9	DP14	DP16	DP18	DP21	DP23	DP26	DP28	DP29	NB1	NB8	LF-024-2	WW-10	WW-11	WW-12	WW-13	WE001	WE-002	DD002	WW001	WW002	WS001
VOC	BENZENE	ND	ND	ND	ND	ND	ND	ND	ND	7	ND	ND	6500	ND	ND	ND	ND	ND	65	ND	ND	16	12000	ND
VOC	ETHYLBENZENE	ND	ND	ND	ND	ND	ND	ND	ND	ND	ND	ND	11000	ND	ND	ND	ND	ND	340	ND	ND	ND	2600	ND
VOC	TOLUENE	ND	ND	ND	ND	ND	ND	ND	ND	ND	ND	ND	17000	ND	ND	ND	ND	ND	150	ND	ND	5	18000	ND
VOC	XYLENES (total)	1300	ND	ND	ND	ND	ND	ND	ND	ND	ND	ND	32000	ND	ND	ND	ND	ND	360	ND	ND	ND	26000	ND
VOC	STYRENE	ND	ND	ND	ND	ND	ND	ND	ND	34	ND	ND	4100	ND	ND	ND	ND	ND	60	ND	ND	ND	8300	ND
VOC	1,2,4-TRIMETHYLBENZENE	ND	ND	ND	ND	ND	ND	ND	ND	ND	ND	ND	16000	ND	ND	ND	ND	ND	ND	ND	ND	ND	NT	ND
VOC	1,3,5-TRIMETHYLBENZENE	ND	ND	ND	ND	ND	ND	ND	ND	ND	ND	ND	5400	ND	ND	ND	ND	ND	ND	ND	ND	ND	NT	ND
SVOC	ACENAPTHENE	20000	ND	ND	ND	ND	ND	ND	ND	ND	ND	ND	60000	ND	ND	ND	ND	ND	ND	ND	ND	ND	ND	ND
SVOC	ANTHRACENE	15000	ND	ND	ND	ND	ND	ND	ND	ND	ND	ND	1400000	ND	ND	ND	ND	ND	ND	ND	ND	ND	NT	ND
SVOC	ACENAPTHYLENE	ND	7900	ND	ND	ND	ND	ND	ND	ND	ND	ND	ND	ND	ND	ND	ND	13000	ND	ND	ND	ND	NT	ND
SVOC	BENZO(a) ANTHRACENE	14000	12000	ND	ND	ND	ND	ND	ND	ND	ND	780	1000000	ND	2700	ND	ND	33000	ND	ND	ND	ND	NT	ND
SVOC	BENZO(a) PYRENE	12000	20000	ND	ND	ND	ND	ND	ND	ND	ND	600	780000	ND	1900	12000	ND	32000	ND	ND	ND	ND	NT	ND
SVOC	BENZO(b) FLUORANTHENE	9100	14000	ND	ND	ND	ND	ND	ND	ND	62000	670	460000	ND	3100	ND	ND	24000	ND	ND	ND	ND	NT	ND
SVOC	BENZO(g,h,i) PERYLENE	7500	15000	ND	ND	ND	ND	ND	ND	ND	ND	490	380000	ND	2500	ND	ND	19000	ND	ND	ND	ND	NT	ND
SVOC	BENZO(k) FLUORANTHENE	9600	17000	ND	ND	ND	ND	ND	ND	ND	72000	630	700000	ND	2300	ND	ND	36000	ND	ND	ND	ND	NT	ND
SVOC	CHRYSENE	13000	14000	ND	ND	ND	ND	ND	ND	ND	53000	890	98000	ND	2800	11000	ND	32000	ND	ND	ND	ND	NT	ND
SVOC	DIBENZOFURAN	15000	ND	ND	ND	ND	ND	ND	ND	ND	ND	ND	ND	ND	ND	ND	ND	ND	ND	ND	ND	ND	NT	ND
SVOC	FLUORENE	17000	ND	ND	ND	ND	ND	ND	ND	ND	ND	ND	1700000	ND	ND	ND	ND	ND	ND	ND	ND	ND	NT	ND
SVOC	FLUORANTHENE	32000	22000	ND	ND	ND	ND	ND	ND	ND	ND	2000	2000000	510	4400	20000	ND	52000	3400	ND	ND	ND	NT	ND
SVOC	INDENO(1,2,3-cd)PYRENE	6700	15000	ND	ND	ND	ND	ND	ND	ND	ND	460	340000	ND	2100	ND	ND	17000	ND	ND	ND	ND	NT	ND
SVOC	2-METHYLNAPTHALENE	13000	ND	ND	ND	ND	ND	ND	ND	ND	ND	ND	3200000	ND	ND	ND	ND	ND	ND	ND	ND	ND	NT	ND
SVOC	PHENANTHRENE	44000	15000	ND	ND	ND	ND	ND	ND	ND	ND	1800	3800000	470	1300	ND	ND	37000	6700	ND	ND	ND	NT	ND
SVOC	DIBENZ(a,j)ACRIDINE	ND	ND	ND	ND	ND	ND	ND	ND	ND	ND	ND	800000	ND	ND	ND	ND	ND	ND	ND	ND	ND	NT	ND
SVOC	PYRENE	30000	19000	ND	ND	ND	ND	ND	ND	ND	ND	1700	2600000	450	4000	17000	ND	73000	6300	ND	ND	ND	NT	ND
SVOC	NAPTHALENE	79000	69	ND	ND	ND	ND	ND	ND	20	210	ND	5800000	ND	130	ND	ND	ND	4200	ND	ND	ND	NT	ND

CONCENTRATIONS REPORTED IN ug/kg

ND: NOT DETECTED ABOVE METHOD DETECTION LIMITS

NT: NOT TESTED FOR LISTED PARAMETER

VOC EPA METHOD SW-846 8260

SVOC EPA METHOD SW-846 8270

LEGEND

MONITORING WELL LOCATION

SAMPLE LOCATION (SOIL OR SURFACE WATER)

EXTENT OF COAL TAR IN SOIL

NOTE: THE ACTUAL EXTENT OF COAL TAR CONTAMINATION ON PROPERTY OWNED BY THE GREENVILLE COUNTY SCHOOL DISTRICT HAS NOT BEEN DETERMINED. THE EXTENT SHOWN IS AN ESTIMATE BASED ON THE ASSUMED FLOW DIRECTION OF WASTEWATER RELEASED BY THE COAL GAS PLANT AND ON THE LABORATORY RESULTS OF SAMPLE WE001

FIGURE 6

4365B105

DRAWN BY DAB	SCALE 1" = 200'	NO.	DATE	REVISION DESCRIPTION	NO.	DATE	REVISION DESCRIPTION
CHECKED BY KMK	DATE						
APPROVED BY DAB	APRIL 1996						

Applied Engineering & Science — Atlanta Georgia

CSXT REAL PROPERTIES
BRAMLETTE ROAD
GREENVILLE, S.C.

COAL TAR EXTENT IN SOIL
PHASE II INVESTIGATION

DWG. NO 4365B105
SHEET NO. 1

9C'

SOIL

3 SURFACE WATERS

Table 3
Contaminant Characteristics
Phase II Site Investigation
Greenville, South Carolina
August 1996

Constituent	Molecular Weight	Solubility in Water	Specific Density
Acenaphthylene	152.20	3.93 mg/L at 25° C	0.8988 g/mL at 16/2° C
Anthracene	178.24	7.5 E-2 mg/L at 15° C	1.283 g/mL at 25/4° C
Benzene	78.11	1,780 mg/L at 20° C	0.9625 g/mL at 100/4° C
Benzo(a)anthracene	228.30	1.4 E-2 mg/L at 25° C	1.274 g/mL at 20/4° C
Benzo(a)pyrene	252.32	3.8 E-3 mg/L at 25° C	1.351 g/mL
Benzo(b)fluoranthene	252.32	1.2 E-3 mg/L at 25° C	No data
Benzo(k)fluoranthene	252.32	5.5 E-4 mg/L at 25° C	No data
Chrysene	228.30	1.5 E-3 mg/L at 15° C	1.274 g/mL at 20/4° C
Ethylbenzene	106.17	140 mg/L at 15° C	0.8670 g/mL at 20/4° C
Ideno(1,2,3-cd)pyrene	276.34	6.2 E-2 mg/L	No Data
2-Methylnaphthalene	142.20	24.6 mg/L at 25° C	1.0058 g/mL at 20/4° C
Naphthalene	128.18	30 mg/L at 25° C	0.9625 g/mL at 100/4° C
Phenanthrene	178.24	1.6 mg/L at 15° C	0.9800 g/mL at 4/4° C
Pyrene	202.26	1.6 E-1 mg/L at 26° C	1.271 g/mL at 23/4° C
Styrene	104.15	300 mg/L at 20° C	0.9060 g/mL at 20/4° C
Toluene	92.14	515 mg/L at 20° C	0.8669 g/mL at 20/4° C
o-Xylene	106.17	152 mg/L at 20° C	0.8802 g/mL at 20/4° C

Data was compiled from Groundwater Chemicals Desk Reference, Montgomery and Welkom, 1991.

Solubility in water is defined as the saturated concentration of the compound in water at a given temperature and pressure.

Specific density is the density of a substance at x°C with respect to water at 4°C. At 4°C the density of water is 1.000 g/mL.

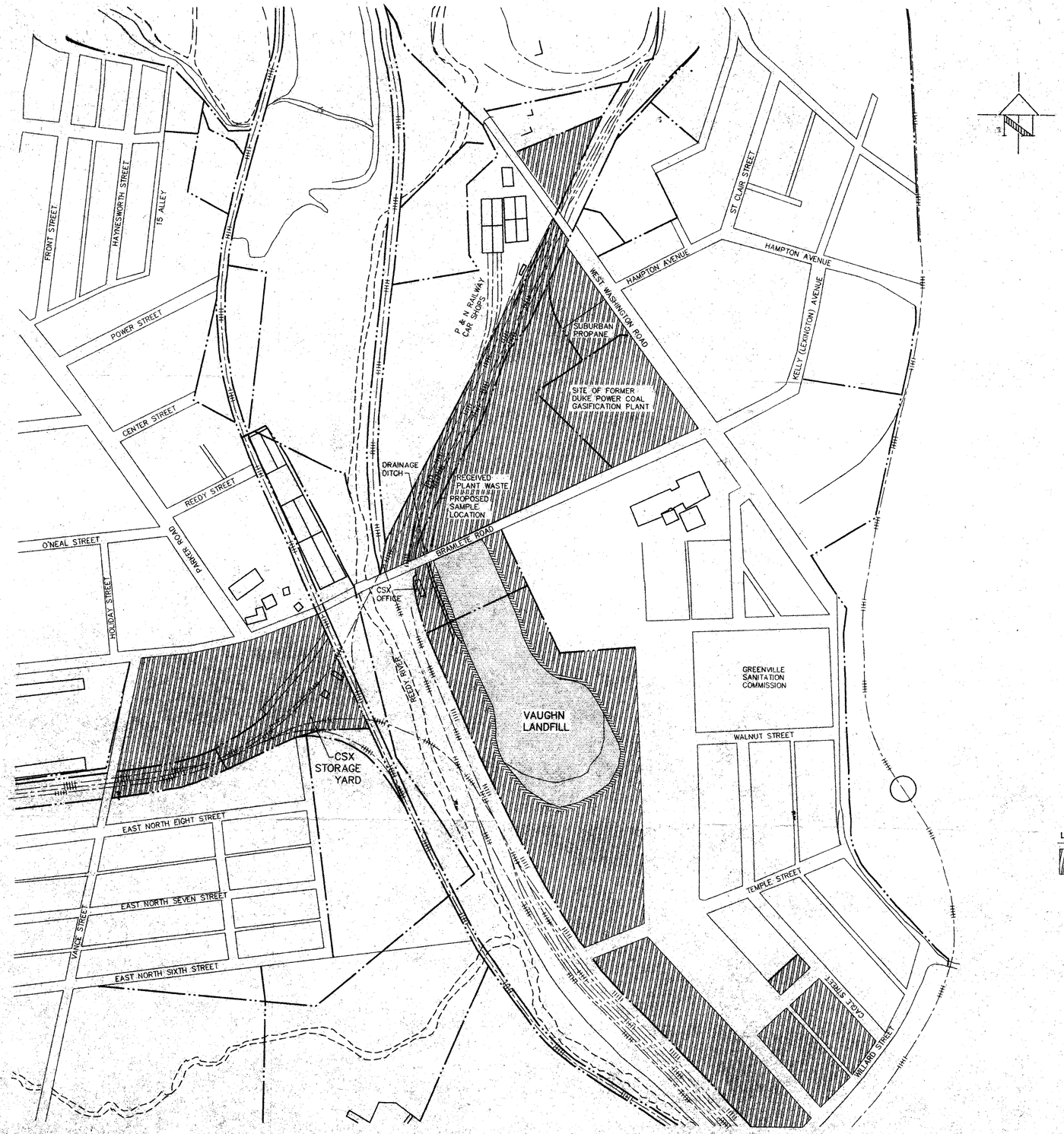

LEGEND

CSXT PROPERTY

DRAWN BY GOE	SCALE 1" = 200'	NO.	DATE	REVISION DESCRIPTION	NO.	DATE	REVISION DESCRIPTION
CHECKED BY KMK	DATE						
APPROVED BY DAB	JUNE 1995						

Applied Engineering & Science — Atlanta Georgia

CSXT REAL PROPERTIES GREENVILLE S.C.

SITE PLAN

DWG. NO 4365A301

SHEET NO. 1 of 1

4365A301

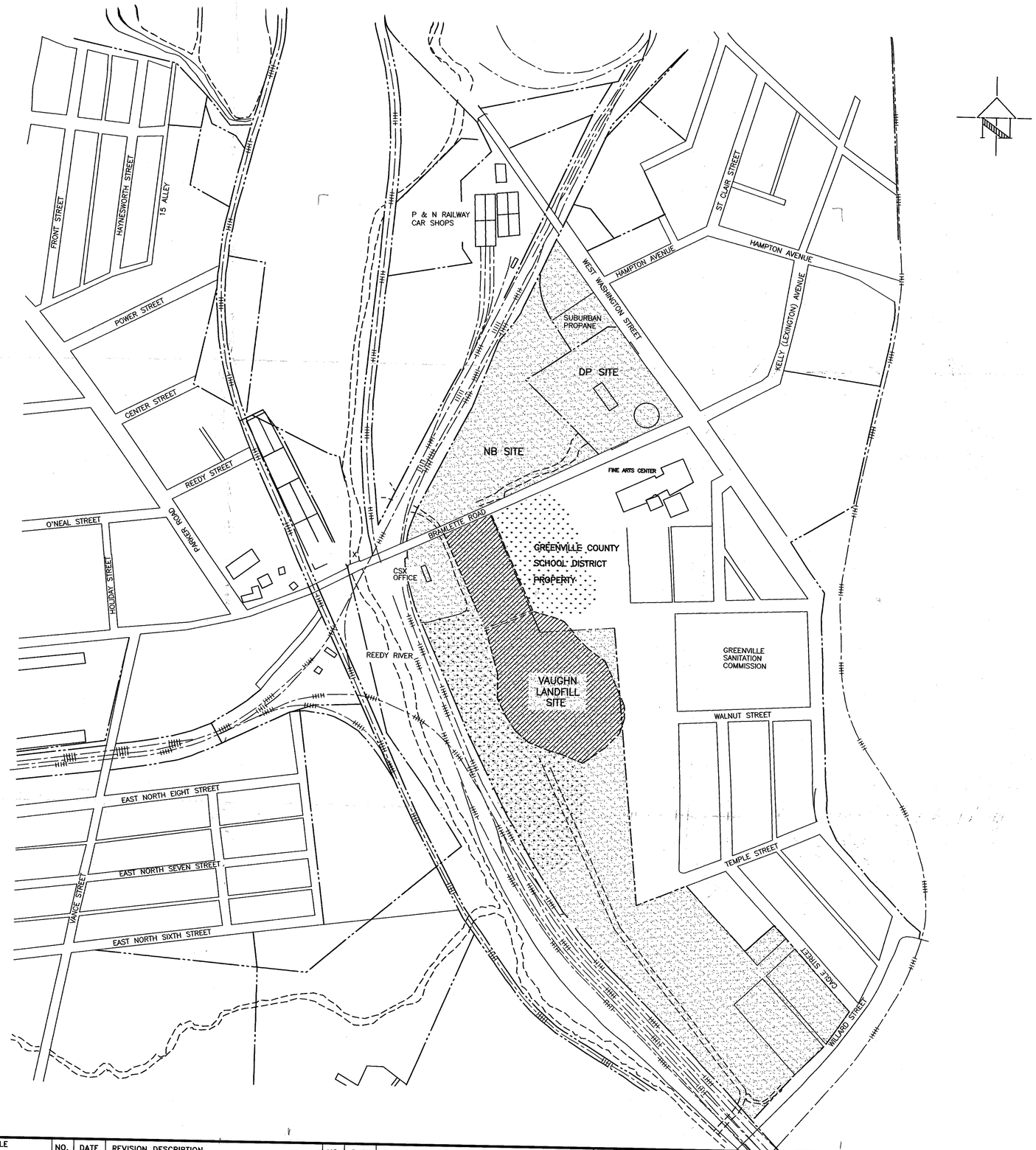

LEGEND

CSXT PROPERTIES

DP SITE INVESTIGATION SITE DESIGNATION

FIGURE 2

4365B100

DRAWN BY DAB	SCALE 1" = 200'	NO.	DATE	REVISION DESCRIPTION	NO.	DATE	REVISION DESCRIPTION
CHECKED BY KMK	DATE APRIL 1996						
APPROVED BY DAB							

Applied Engineering & Science — Atlanta Georgia

CSXT REAL PROPERTIES
BRAMLETTE ROAD
GREENVILLE, S.C.

CSXT PROPERTIES
PHASE II SITE INVESTIGATION

DWG. NO 4365B100

SHEET NO. 1 of 1

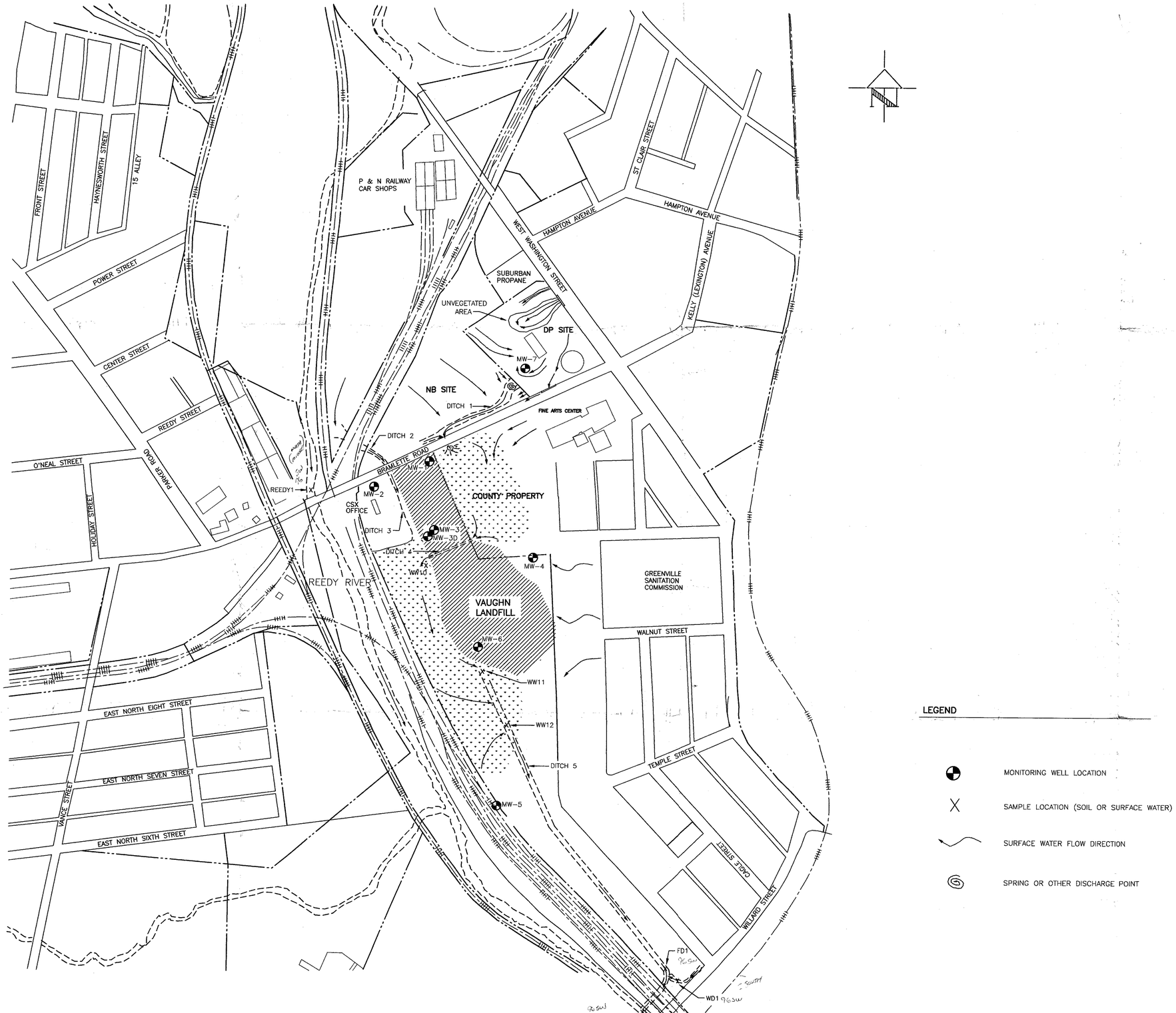

LEGEND

- MONITORING WELL LOCATION
- SAMPLE LOCATION (SOIL OR SURFACE WATER)
- SURFACE WATER FLOW DIRECTION
- SPRING OR OTHER DISCHARGE POINT

FIGURE 3

4365B108

DRAWN BY DAB	SCALE 1" = 200'	NO.	DATE	REVISION DESCRIPTION	NO.	DATE	REVISION DESCRIPTION
CHECKED BY KMK	DATE APRIL 1996						
APPROVED BY DAB							

Applied Engineering & Science — Atlanta Georgia

CSXT REAL PROPERTIES
BRAMLETTE ROAD
GREENVILLE, S.C.

SURFACE FLOW DIAGRAM
PHASE II SITE INVESTIGATION

DWG. NO 4365B108

SHEET NO. 1 of 1

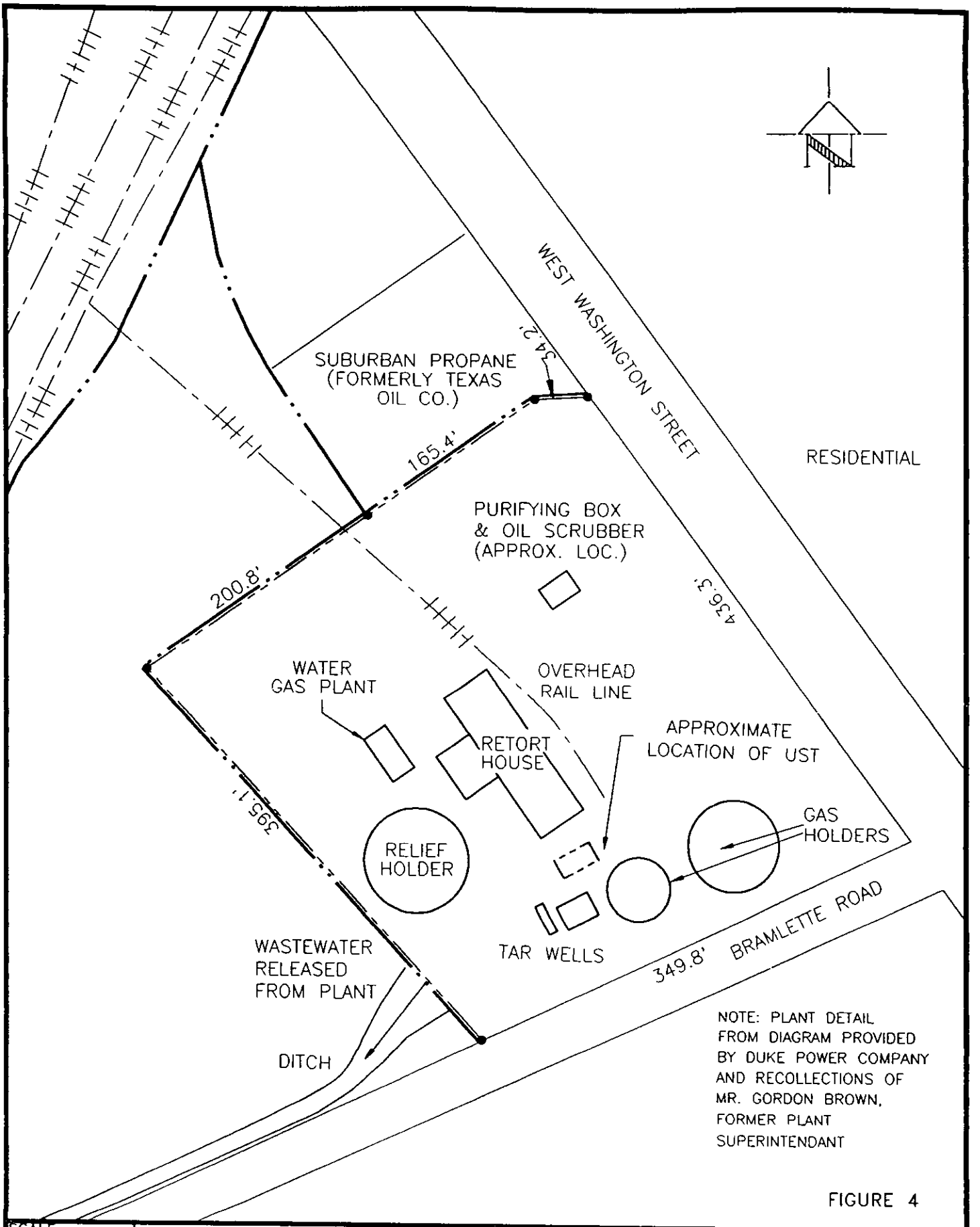

NOTE: PLANT DETAIL FROM DIAGRAM PROVIDED BY DUKE POWER COMPANY AND RECOLLECTIONS OF MR. GORDON BROWN, FORMER PLANT SUPERINTENDANT

FIGURE 4

SCALE AS SHOWN	Applied Engineering & Science	FORMER DUKE POWER COAL GASIFICATION PLANT; DETAIL WEST WASHINGTON STREET GREENVILLE, SOUTH CAROLINA	DATE APR. 1996
DWN. BY DAB			DWG. NO. 4365B101
CHK'D. BY DAB			SHEET NO. –
APPR. BY KMK			

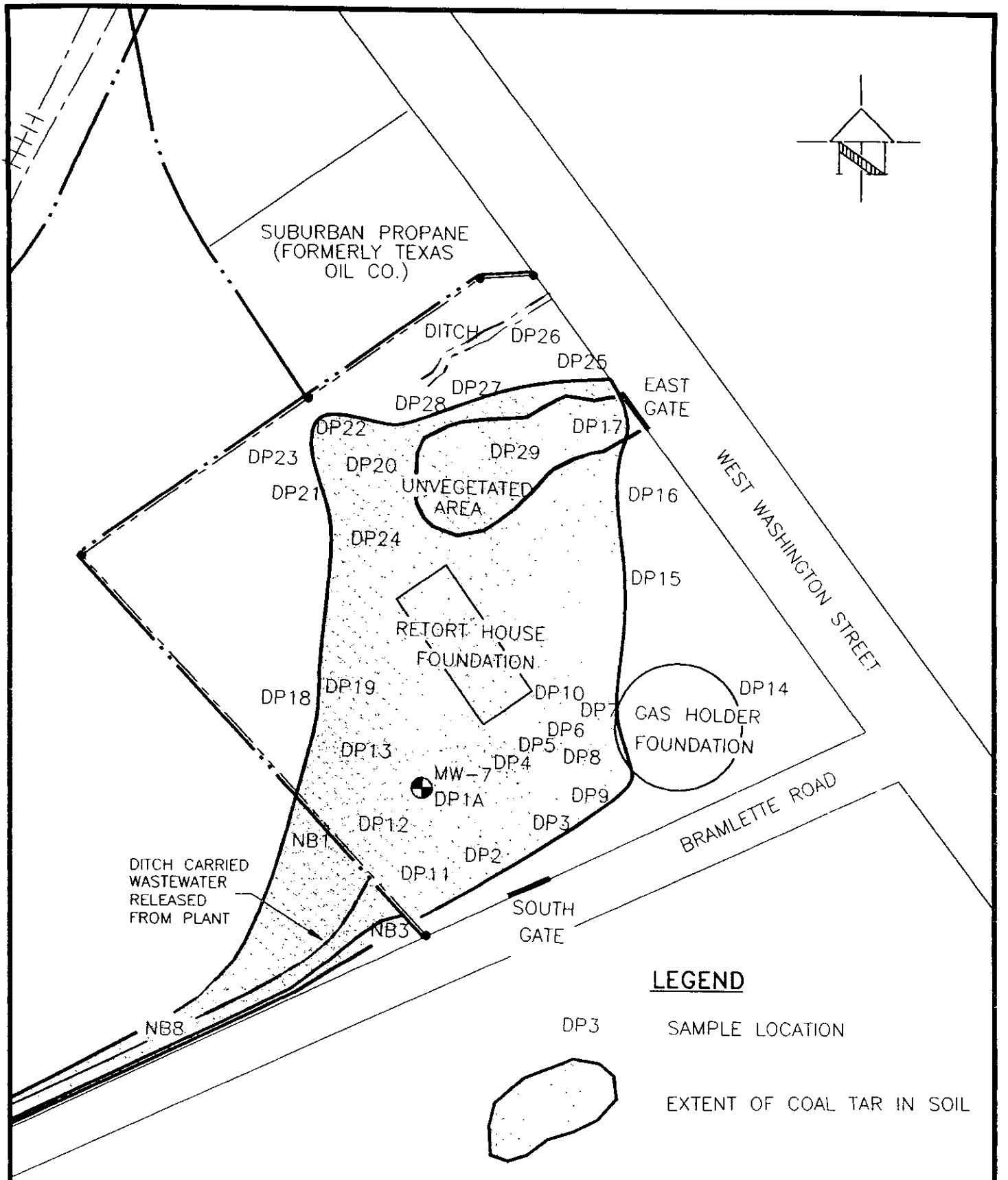

FIGURE 5

SCALE 1" = 100'	Applied Engineering & Science	COAL TAR EXTENT IN SOIL DUKE POWER SITE WEST WASHINGTON STREET GREENVILLE, SOUTH CAROLINA	DATE APR. 1996
DWN. BY DAB			DWG. NO. 4365B104
CHK'D. BY DAB			SHEET NO. –
APPR. BY KMK			

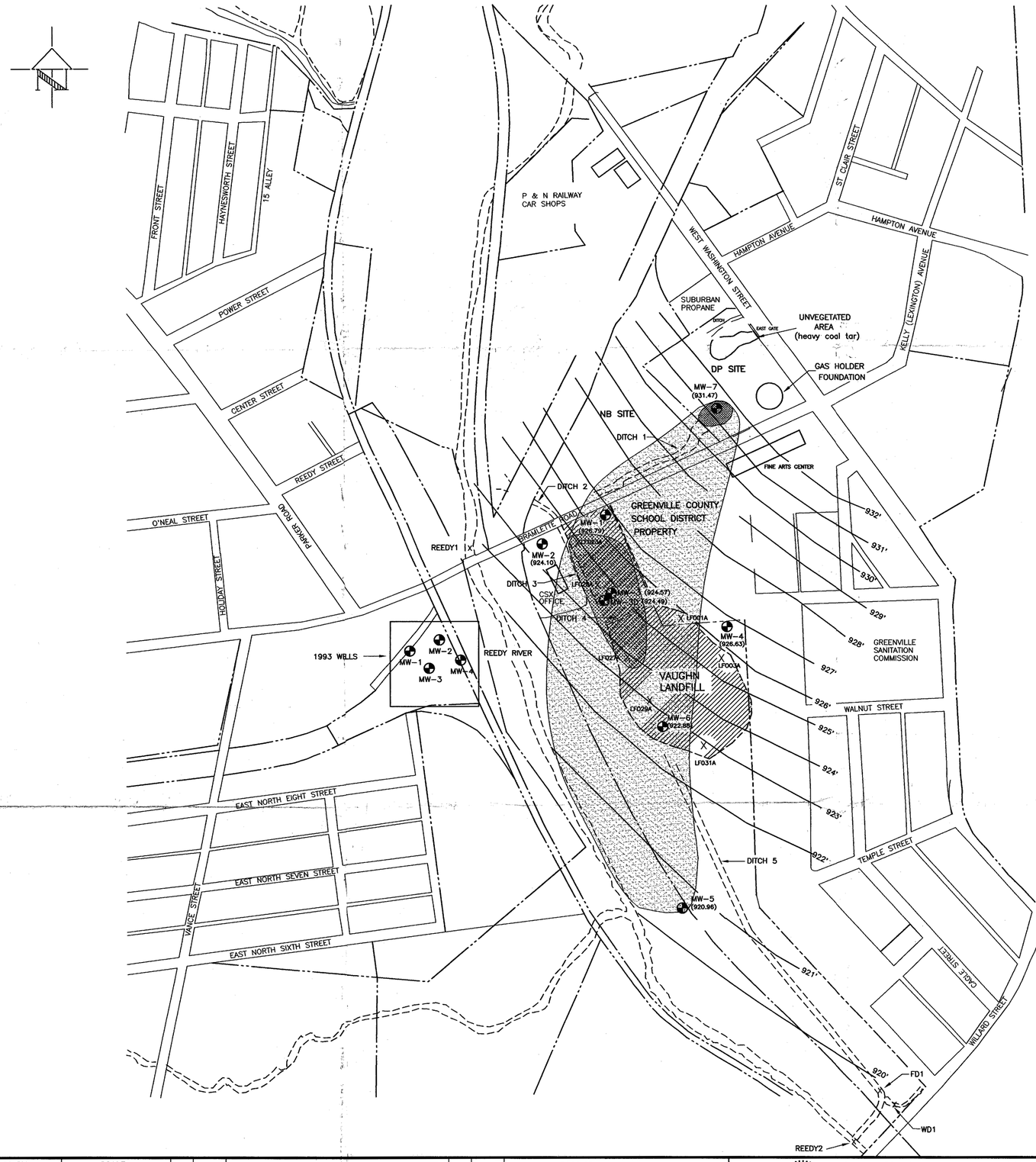

TABLE 2

VOLATILE AND SEMI-VOLATILE COMPOUNDS IN GROUNDWATER SAMPLES

	COMPOUNDS	1996 SAMPLES									1995 SAMPLES						
		MCLs	MW-1	MW-2	MW-3	MW-3D	MW-4	MW-5	MW-6	MW-7	LF001A	LF003A	LF023A	LF025A	LF027A	LF029A	LF031A
VOC	BENZENE	5	ND	ND	160	1100	ND	ND	ND	680	ND	ND	770	700	84	ND	ND
VOC	ETHYLBENZENE	700	ND	ND	100	380	ND	ND	ND	ND	ND	ND	340	280	20	ND	ND
VOC	TOLUENE	1000	ND	ND	140	160	ND	ND	7	ND	ND	ND	460	45	32	ND	ND
VOC	XYLENES (total)	10000	ND	ND	148	330	ND	ND	10	ND	ND	ND	520	250	58	ND	ND
VOC	STYRENE	100	ND	ND	50	14	ND	ND	ND	ND	ND	ND	55	ND	ND	ND	ND
VOC	1,2,4-TRIMETHYLBENZENE	–	ND	ND	50	82	ND	ND	8	ND	ND	ND	ND	ND	ND	ND	ND
VOC	1,3,5-TRIMETHYLBENZENE	–	ND	ND	17	24	ND	ND	ND	ND	ND	ND	ND	ND	ND	ND	ND
SVOC	ACENAPTHENE	– 2.5	700	ND	120	ND	ND	ND	150	ND	NT	NT	60	NT	20	NT	NT
SVOC	ANTHRACENE	– 2.5	ND	ND	ND	ND	ND	ND	120	ND	NT	NT	50	NT	ND	NT	NT
SVOC	ACENAPTHYLENE	– 2.5	ND	ND	570	ND	ND	ND	360	ND	NT	NT	500	NT	ND	NT	NT
SVOC	BENZO(a) ANTHRACENE	– 2	ND	ND	ND	ND	ND	ND	ND	ND	NT	NT	ND	NT	ND	NT	NT
SVOC	BENZO(a) PYRENE	2	ND	ND	ND	ND	ND	ND	ND	ND	NT	NT	10	NT	ND	NT	NT
SVOC	BENZO(b) FLUORANTHENE	– 2	ND	ND	ND	ND	ND	ND	ND	ND	NT	NT	ND	NT	ND	NT	NT
SVOC	BENZO(g,h,i) PERYLENE	– 2.5	ND	ND	ND	ND	ND	ND	ND	ND	NT	NT	ND	NT	ND	NT	NT
SVOC	BENZO(k) FLUORANTHENE	– 2	ND	ND	ND	ND	ND	ND	ND	ND	NT	NT	ND	NT	ND	NT	NT
SVOC	CHRYSENE	– 2.5	ND	ND	ND	ND	ND	ND	ND	ND	NT	NT	ND	NT	ND	NT	NT
SVOC	DIBENZOFURAN	– 2.5	ND	ND	ND	ND	ND	ND	220	ND	NT	NT	40	NT	ND	NT	NT
SVOC	FLUORENE	– 2.5	270	ND	180	ND	ND	ND	250	ND	NT	NT	170	NT	10	NT	NT
SVOC	FLUORANTHENE	– 2.5	ND	ND	ND	ND	ND	ND	130	ND	NT	NT	ND	NT	ND	NT	NT
SVOC	INDENO(1,2,3-cd)PYRENE	– 2	ND	ND	ND	ND	ND	ND	ND	ND	NT	NT	ND	NT	ND	NT	NT
SVOC	2-METHYLNAPTHALENE	– 2.5	1800	ND	820	1800	ND	ND	330	130	NT	NT	1400	NT	40	NT	NT
SVOC	PHENANTHRENE	– 2.5	240	ND	230	ND	ND	ND	360	ND	NT	NT	200	NT	10	NT	NT
SVOC	DIBENZ(a,j)ACRIDINE	– 2	ND	ND	ND	ND	ND	ND	ND	ND	NT	NT	ND	NT	ND	NT	NT
SVOC	PYRENE	– 2.5	ND	ND	ND	ND	ND	ND	97	ND	NT	NT	60	NT	ND	NT	NT
SVOC	NAPTHALENE	– 2.5	4600	ND	15000	9300	ND	12	1800	2400	NT	NT	2200	NT	400	NT	NT
SVOC	2,4-DIMETHYLPHENOL	– 2.5	ND	ND	ND	ND	ND	ND	ND	ND	NT	NT	ND	NT	50	NT	NT
SVOC	4-METHYLPHENOL	– 2.5	ND	ND	ND	ND	ND	ND	ND	ND	NT	NT	10	NT	NT	NT	NT

MCLs FROM DRINKING WATER REGULATIONS AND HEALTH ADVISORIES; Office of Water, USEPA, May 1995

CONCENTRATIONS REPORTED IN ug/l

ND: NOT DETECTED ABOVE METHOD DETECTION LIMITS

NT: NOT TESTED FOR LISTED PARAMETER

VOC EPA METHOD SW-846 8260

SVOC EPA METHOD SW-846 8270

LEGEND

- MONITORING WELL LOCATION
- GROUNDWATER SAMPLE LOCATION
- GROUNDWATER CONTAMINANT PLUME (ESTIMATED)
- CONTAMINANT CONCENTRATIONS IN GROUNDWATER EXCEEDING MAXIMUM CONTAMINANT LIMITS (MCLs)
- POTENTIOMETRIC SURFACE CONTOURS (930')

FIGURE 7

43658106

DRAWN BY DAB	SCALE 1" = 200'	NO.	DATE	REVISION DESCRIPTION	NO.	DATE	REVISION DESCRIPTION	Applied Engineering & Science, Atlanta Georgia	CSXT REAL PROPERTIES BRAMLETTE ROAD GREENVILLE, S.C.
CHECKED BY KMK	DATE								EXTENT OF GROUNDWATER CONTAMINATION PHASE II SITE INVESTIGATION
APPROVED BY DAB	APRIL 1996								DWG. NO 4365B106 SHEET NO. 1 of 1

B

Notes

APPENDIX B

PHASE I WORKPLAN

WORKPLAN

SOIL, SEDIMENT, AND GROUNDWATER SAMPLING

CSX/VAUGHN LANDFILL

CSX TRANSPORTATION

Greenville, SC

October 1994

WORKPLAN

SOIL, SEDIMENT, AND GROUNDWATER SAMPLING

CSX/VAUGHN LANDFILL

CSX Transportation
Greenville, South Carolina

October, 1994

APPLIED ENGINEERING & SCIENCE, INC.

Atlanta, Georgia

TABLE OF CONTENTS

APPENDICES

LIST OF TABLES

LIST OF FIGURES

I. INTRODUCTION

On August 24, 1994, the South Carolina Department of Health and Environmental Control (DHEC) notified CSX Transportation by certified mail of the departments investigation of an unpermitted landfill on CSX property (the Site) in Greenville, South Carolina. **Figure 1 - Site Location Map**, indicates the location of the Site west of the city of Greenville. DHEC, along with the U.S. Army Corps of Engineers, visited the Site in Spring, 1994, noticed leachate and a sludge-like material at the base of the landfill and in the surrounding wetlands, and collected a sample. Laboratory analysis of the sample indicated that a hazardous constituent release to the environment had occurred. In a letter to CSX dated August 24, 1994, DHEC requested a work plan from CSX to assess vertical and horizontal impact to the environment in soil and groundwater from landfilling and other activities on the property. A copy of the DHEC letter is included in Appendix A - DHEC Letter to CSX.

A. Site Description

The Site is located on Bramlette Road approximately one (1) mile west of the city of Greenville, South Carolina in Greenville County. CSX Transportation property includes land on both sides of Bramlette Road, both sides of the Reedy River, and right-of-ways which contain trackage. The landfill Site is contained on property south of Bramlette

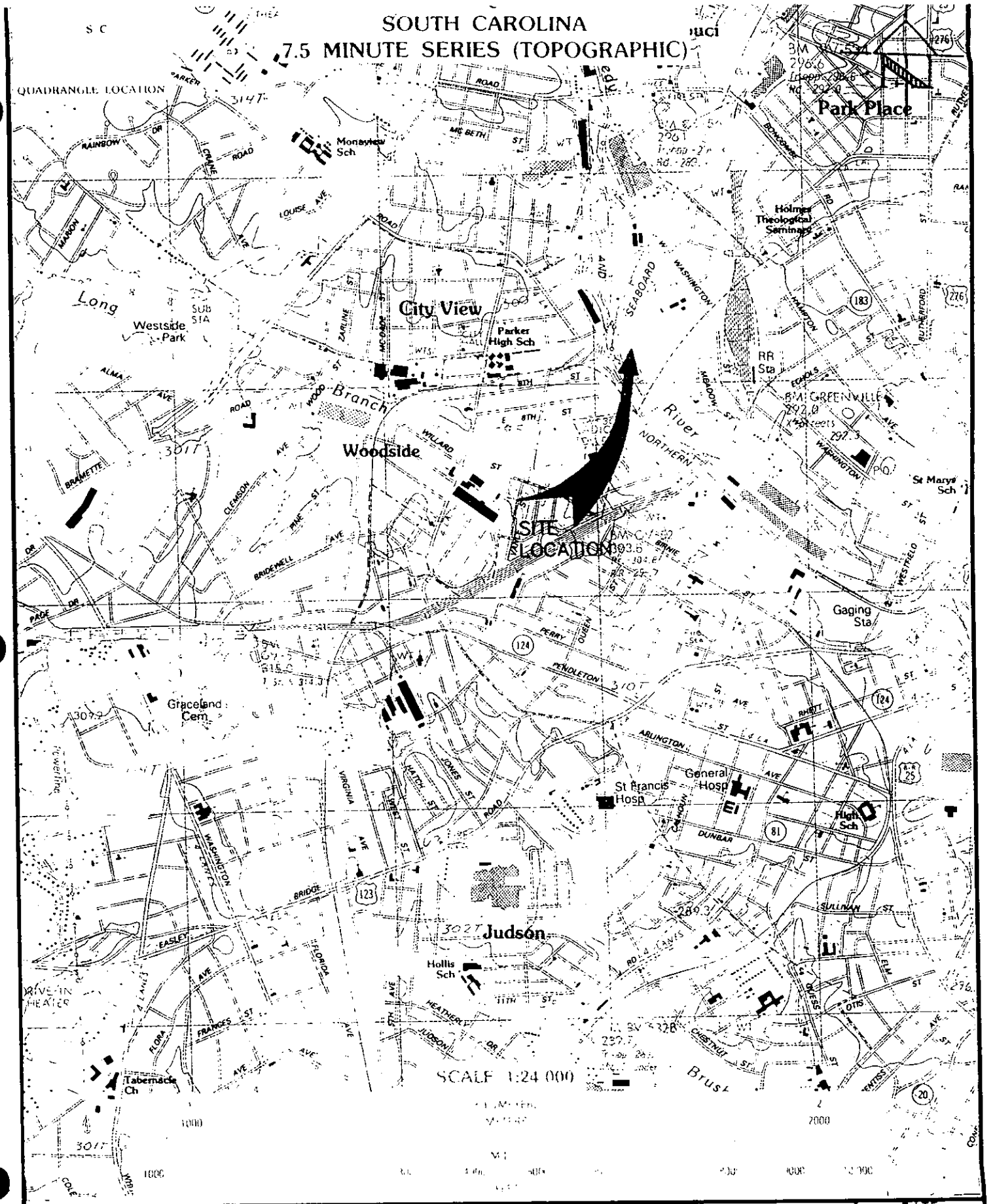

SCALE ---	Applied Engineering & Science	SITE LOCATION MAP VAUGHN LANDFILL CSXT PROPERTY GREENVILLE, S.C.	DATE OCT., 1994
DWN. BY SKN			DWG. NO. 4365A
CHK'D. BY GEW			SHEET NO
APPR. BY GEW			

Road and east of the Reedy River. **Figure 2 - Site Plan**, is a copy of a Greenville County tax map indicating the layout of the property which contains the landfill in relation to the Reedy River and Bramlette Road.

This section of Greenville contains light industry, schools, and residences along with several rail facilities and supporting trackage. CSX maintains a small office east of the river.

B. Landfilling Activities

The CSX property off Bramlette Road has been used as a construction debris landfill for at least six (6) years. According to Mr. Robert Vaughn, Vaughn Construction and Demolition Company of Greenville has been the primary user of the landfill since 1987. Some of the materials noted during a Site visit by AES include concrete, bricks, wood, plastic, metals, roofing materials, insulation, and glass. Approximately seven (7) acres of the Site have been filled with debris to an average depth of eight (8) feet. Access to the Site is from Bramlette Road through a locked gate.

The fill area has been cut through by a ditch which allows water to flow from the wetland on the east side of the landfill to the floodplain and into the Reedy River to the west. This ditch is located approximately four hundred (400) feet from the entrance. A dirt

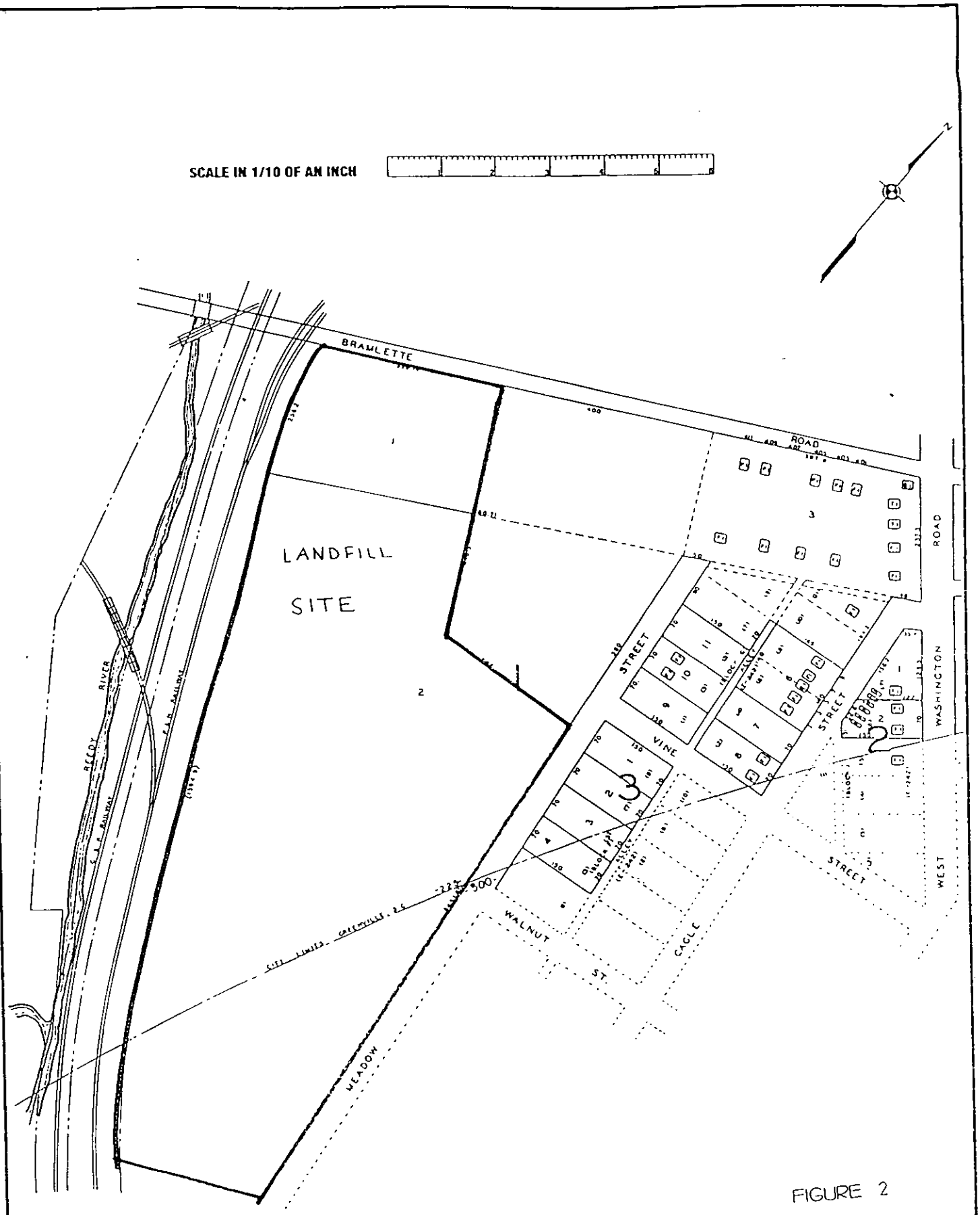

FIGURE 2

SCALE ---	Applied Engineering & Science	SITE PLAN CSXT PROPERTY GREENVILLE, S.C.	DATE OCT., 1994
DWN. BY SKN			DWG. NO. 4365A
CHK'D. BY GEW			SHEET NO.
APPR. BY GEW			

covered culvert across the ditch allows access to the back of the landfill. A large portion of the landfill has been covered with a thin layer of soil to allow passage of dump trucks to the rear where dumping continued until recently. The back one hundred (100) feet or so of the fill area is uncovered.

C. Hydrogeology

The floodplain and adjoining wetlands (as delineated by the Corps of Engineers) south of Bramlette Road and east of the river are at an elevation of 285 feet above mean sea level (msl). The landfill covers approximately seven (7) acres on the property.

The Reedy River borders the property one hundred (100) feet to the west. Depth to groundwater in the area of the Site is within ten (10) feet, as determined by monitoring wells installed across the river on adjacent CSX property (described in AES report "Monitoring Well Installations and Soils Investigation" submitted to DHEC in July, 1993). Groundwater flow is expected to be toward the river in a southwesterly direction. Soils in the area consist of Chewacla (Cv) well drained to poorly drained silty, clay loams and a combination of Cartecay and Chewacla (Ca) sandy loam and silty clay. Both are alluvium found in floodplains and are listed as hydric by the USDA Soil Conservation Service (SCS). Copies of the soils map and the hydric soils list are included in Appendix B - Soil Survey. Thicknesses of the soils are reported to average fifty four (54) feet above the granite gneiss bedrock. The hydraulic and sorptive characteristics of these clay

soils generally makes them poor conductors of groundwater; therefore, groundwater flow and contaminant migration are normally slow. Hydraulic conductivity of these materials typically ranges from 10^{-5} to 10^{-7} cm/s and attenuation of contaminants is relatively high.

D. Well Survey

A well survey conducted by AES in 1992 during installation of the monitoring wells referenced in the report in Section I-C above indicated that there were no registered production wells (potable or industrial) within a 1/2 mile radius of the CSX property west of the Reedy River. That property is less than one thousand (1,000) feet from the landfill Site. Information for this survey was provided by the South Carolina Water Resources Commission, Greenville office, in a computer printout, and by the Commission report entitled "Ground-Water Resources of Greenville County, South Carolina; Bulletin no. 38" published in 1968. This information is included in Appendix C - Well Survey.

II. PURPOSE, OBJECTIVES, AND SCOPE

In October, 1994 CSX Transportation, in response to the DHEC request, retained Applied Engineering and Science, Inc. (AES) to prepare a workplan for the assessment of vertical and horizontal impact to the environment from landfilling activities at the Bramlette Road Site.

A. Purpose

The primary purpose of this investigation is to provide DHEC and Corps of Engineers with an analytical data set from which decisions with regard to appropriate future actions, if any, for the site can be based. The data set must be comprehensive and of defendable quality so as to assess the current character of the material which has been placed on the site. The initial phase of the investigation is addressed in this work plan and the data collected during this initial phase will be used to:

1. Assess the character of the material

2. Identify the chemicals of concern for the site

3. Provide information on which decisions for the placement of monitoring wells

and/or additional material sampling needs can be made

B. Objectives

The objectives of the work to be performed are as follows:

- Assess surface water and sediment content in the wetland east of the fill area
- Assess the quality of the native soils and groundwater beneath the fill
- Collect representative samples of leachate on the perimeter of the fill
- Assess surface water and sediment content in the floodplain and wetlands west of the fill area
- Identify surface pathways by which migration of material may enter the Reedy River
- Identify and characterize possible sources of contamination within the fill
- Assess field and analytical data to determine additional information and/or

sampling requirements

- Report findings and recommendations to CSX and DHEC

C. Scope

The scope of this investigation includes direct observation, surface water sampling, sediment sampling, soil sampling, leachate collection, head space analysis, laboratory analysis, data review and analysis, and report preparation. Details of the scope of work for this investigation are given in Section III of this workplan.

III. CHEMICAL DATA ACQUISITION

A. Data Quality Objectives

To meet the primary objectives of the initial site investigation, AES plans to implement a data quality objectives (DQO) program that includes four categories of analytical methods and data uses. The various categories within the DQO program are presented in **Table 1**. This table identifies typical data uses and analytical levels. These levels range from a basic field survey technique (EPA Level 1) used as an aid to the investigation process to very comprehensive laboratory analysis (EPA Level IV), as might be required for development of remedial alternatives or a risk assessment. This DQO program reflects EPA's DQO format as presented in Data Quality Objectives for Remedial Response Activities, EPA 540/G-87/003A, March 1987.

The DQO program is based on integration of data use categories with a menu of analytical levels that complement one another. Selective implementation of this program can benefit the investigation process by providing quick turnaround of data with no loss of data quality on critical samples. This method is used to accomplish the objectives of the investigation by effective use of resources and manpower, and by channeling samples of critical nature into the analyses that are of suitable quality.

AES will employ two independent analytical resources during the investigation. As previously shown in **Table I,** those include field surveys (Level 1) and laboratory analysis of samples at a DHEC approved analytical laboratory (Level IV).

1. Level I - Field Surveys - For Level I, field surveys, portable organic vapor analyzers will be used to survey samples taken by the investigation team at the time of collection. These real-time analyzers will be instruments such as HNu Systems Model PI#101 and Foxboro's Model 128 organic vapor analyzers. Data from the sample surveys, along with pertinent data concerning the samples, will be logged in the field log. The procedures for surveying samples collected for field surveys will be EPA Method 3810, Standard Head Space Analysis, 3rd Edition, November 1986. Data generated from the field monitoring will typically be used to make decisions concerning the execution of the investigation, such as approximating the relative degree of contamination to assist the investigation activities or providing a general screening before laboratory analysis of the collected samples.

2. Level IV - Laboratory Analysis - The purpose of Level IV analysis is to broaden the characterization of contaminants. Level IV analysis may be required to document remediation of a given area or to obtain data suitable for risk assessment. Samples collected during the investigation at the CSX/Vaughn Landfill site will

require the level of completeness and quality offered by Level IV analysis. Because the samples collected during this investigation will be used to identify and characterize source materials and to make future decisions on chemicals of concern at the site, all samples collected during this investigation will be analyzed under Level IV procedures. The table below presents an analytical suite of parameters typical of a Level IV analysis.

Parameter	Method
Volatile Organics	EPA Method 8240/8260
Semi-Volatile Organics	EPA Method 8270
Metals	EPA Method 6010/7060/7471/7841
Pesticides	EPA Method 8080
Herbicides	EPA Method 8150

TABLE 1
SUMMARY OF ANALYTICAL LEVELS APPROPRIATE TO DATA USES

DATA USES	ANALYTICAL LEVEL	TYPE OF ANALYSIS	LIMITATIONS	DATA QUALITY
Site characterization monitoring during implementation	Level I	Total organic/inorganic vapor detection using portable instruments Field test kits	instruments respond to naturally occurring compounds	if instruments calibrated and data interpreted correctly, can provide indication of contamination
Site characterization evaluation of alternatives engineering design monitoring during implementation	Level II	Variety of organics by GC; inorganics by AA; XRF Tentative ID; analyte specific Detection limits vary from low ppm to low ppb	Tentative ID Techniques/instruments limited mostly to volatiles, metals	Dependent on QA/QC steps employed Data typically reported in concentration ranges
Risk Assessment site characterization evaluation of alternatives engineering design monitoring during implementation	Level III	Organics/inorganics using EPA procedures other than CLP, can be analyte specific RCRA characteristics tests	Tentative ID in some cases Can provide data of same quality as Level IV	Similar detection limits to CLP Less rigorous QA/QC
Risk Assessment PRP determination evaluation of alternatives engineering design	Level IV	TCL organic/inorganics by GC/MS; AA; ICP Low ppb detection limit	Tentative identification of non-TCL parameters Some time may be required for validation of packages	Goal is data of known quality via CLP Rigorous QA\QC

B. Contaminants of Concern

Sample analysis conducted by DHEC on a sample collected at the Site revealed the presence of *toluene* at 3.04 mg/kg. Toluene is a petroleum derived organic constituent and is toxic through exposure by inhalation, ingestion, or absorption. No other compounds were identified in the sample. However, a representative of the U.S. Army Corps of Engineers mentioned *creosote* as a possible contaminant. The Site Health and Safety Plan will be written to address possible exposure to these contaminants and will be updated if additional compounds are suspected or identified.

C. Sample Locations

Three separate areas have been designated for sample collection activities on the site. **Area 1** includes floodplain, wetlands, and woodlands east of the fill area and south of Bramlette Road up to the adjoining property along Meadow Street. **Area 2** includes the actual fill material which covers approximately 6.6 acres and includes the drainage ditch through the center of the fill. **Area 3** includes the floodplain, wetlands, and woodlands west of the fill, south of Bramlette Road, and east of the Reedy River. CSX property extends south past the end of the landfill and into the woodland. The extent of investigation to the south will be determined from field observations during site operations.

Figure 3 - Sample Locations indicates the proposed sample locations for each area. Sediment samples will be collected in the wetlands and floodplain surrounding the fill area using a hand auger, stainless steel spoon, or shelby tube, depending on conditions. Surface water will be collected using a clean glass vessel. A Geoprobe systems truck-mounted rig will be used to advance collection rods into the landfill to collect soil samples at the fill/soil interface and groundwater samples at the water table. No monitoring well installations are planned at this time. Data review of the samples collected by hand auger and Geoprobe will provide a better indication of well placement.

Sample parameters include volatile organics (EPA Method 8240/8260), TAL metals (EPA Method 6010, and pesticides/herbicides (EPA Methods 8080/8150). **Table 2 - Sample Designations** indicates the sample designations, sample type (soil, water, sediment, etc.), and the analytical parameters.

1. Area 1 - Wetlands east of the fill - a minimum of two sediment and two surface water samples will be collected to assess the impact from possible dumping directly in the area or from leachate migrating from the fill. A representative of the US Army Corps of Engineers observed sludge-like material in the surface waters in the area. Samples to be collected by AES will take into account any visible sludge-like material during field operations. The locations noted on **Figure 2** are proposed and may vary depending on site conditions, access, and field observations.

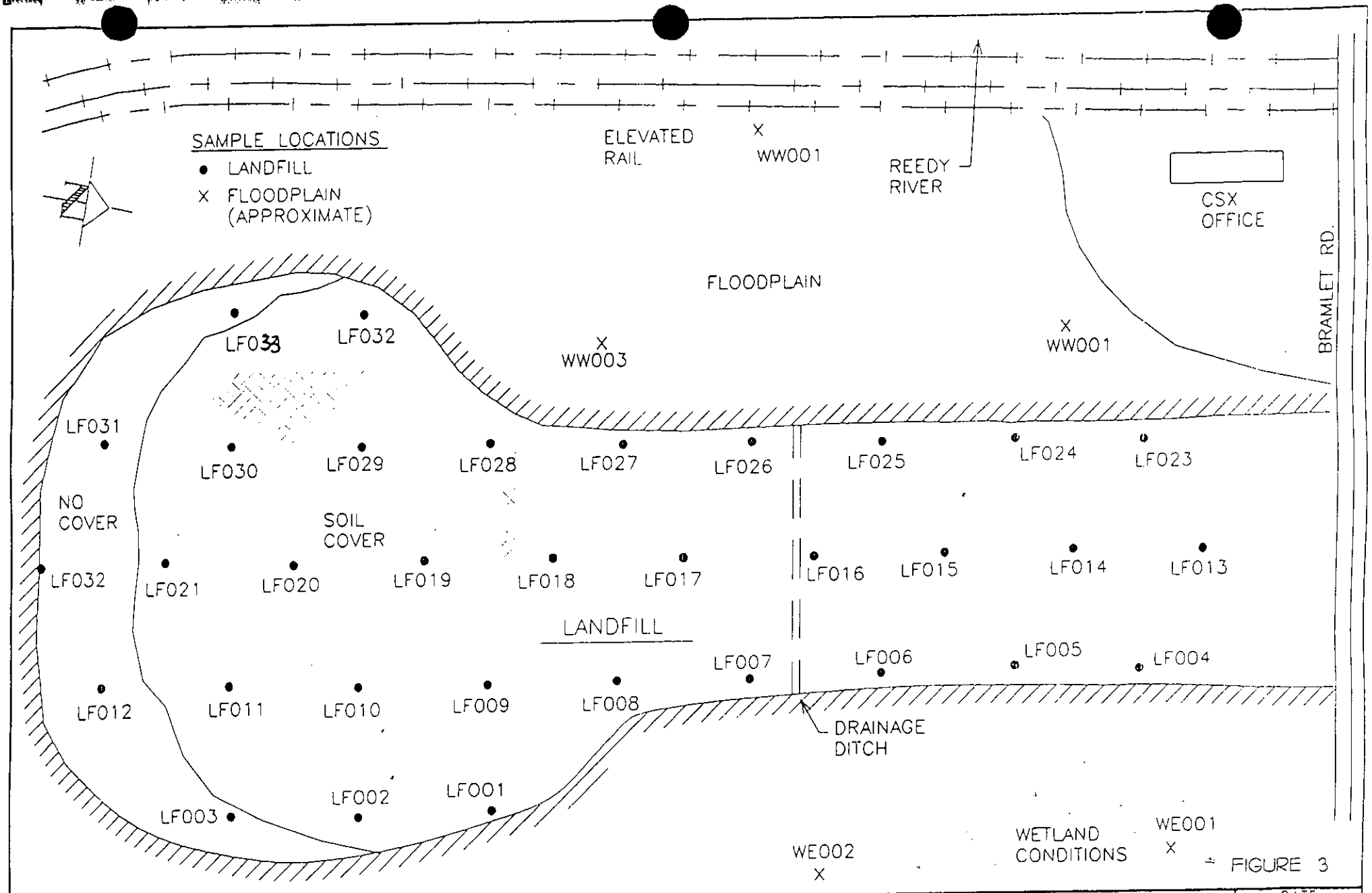

FIGURE 3

SCALE 1" = 100'	Applied Engineering & Science	CSXT PROPERTY GREENVILLE, SC	SAMPLE LOCATIONS VAUGHN LANDFILL
DWN. BY KMK			DATE OCT. 1994
CHK'D. BY GEW			DWG. NO. 4365A
APPR. BY GEW			SHEET NO.

TABLE 2
SAMPLE DESIGNATIONS
CSX\VAUGHN LANDFILL
GREENVILLE, SC
AES, October 1994

SAMPLE ID	SAMPLE TYPE/MATRIX	ANALYTICAL PARAMETERS
WE001[1]	Surface water/sediment*	8240/8260, 6010, 8080/8150
WE002	Surface water/sediment*	8240/8260, 6010, 8080/8150
WW001[2]	Surface water/sediment*	8240/8260, 6010, 8080/8150
WW002	Surface water/sediment*	8240/8260, 6010, 8080/8150
WW003	Surface water/sediment*	8240/8260, 6010, 8080/8150
LF001[3]	Soils/groundwater	8240/8260, 6010, 8080/8150
LF002	Soils/groundwater	8240/8260, 6010, 8080/8150
LF003	Soils/groundwater	8240/8260, 6010, 8080/8150
LF004	Soils/groundwater	8240/8260, 6010, 8080/8150
LF005	Soils/groundwater	8240/8260, 6010, 8080/8150
LF006	Soils/groundwater	8240/8260, 6010, 8080/8150
LF007	Soils/groundwater	8240/8260, 6010, 8080/8150
LF008	Soils/groundwater	8240/8260, 6010, 8080/8150
LF009	Soils/groundwater	8240/8260, 6010, 8080/8150

TABLE 2
SAMPLE DESIGNATIONS
CSX\VAUGHN LANDFILL
GREENVILLE, SC
AES, October 1994

SAMPLE ID	SAMPLE TYPE/MATRIX	ANALYTICAL PARAMETERS
LF010	Soils/groundwater	8240/8260, 6010, 8080/8150
LF011	Soils/groundwater	8240/8260, 6010, 8080/8150
LF012	Soils/groundwater	8240/8260, 6010, 8080/8150
LF013	Soils/groundwater	8240/8260, 6010, 8080/8150
LF014	Soils/groundwater	8240/8260, 6010, 8080/8150
LF015	Soils/groundwater	8240/8260, 6010, 8080/8150
LF016	Soils/groundwater	8240/8260, 6010, 8080/8150
LF017	Soils/groundwater	8240/8260, 6010, 8080/8150
LF018	Soils/groundwater	8240/8260, 6010, 8080/8150
LF019	Soils/groundwater	8240/8260, 6010, 8080/8150
LF020	Soils/groundwater	8240/8260, 6010, 8080/8150
LF021	Soils/groundwater	8240/8260, 6010, 8080/8150
LF022	Soils/groundwater	8240/8260, 6010, 8080/8150
LF023	Soils/groundwater	8240/8260, 6010, 8080/8150
LF024	Soils/groundwater	8240/8260, 6010, 8080/8150

TABLE 2
SAMPLE DESIGNATIONS
CSX\VAUGHN LANDFILL
GREENVILLE, SC
AES, October 1994

SAMPLE ID	SAMPLE TYPE/MATRIX	ANALYTICAL PARAMETERS
LF025	Soils/groundwater	8240/8260, 6010, 8080/8150
LF026	Soils/groundwater	8240/8260, 6010, 8080/8150
LF027	Soils/groundwater	8240/8260, 6010, 8080/8150
LF028	Soils/groundwater	8240/8260, 6010, 8080/8150
LF029	Soils/groundwater	8240/8260, 6010, 8080/8150
LF030	Soils/groundwater	8240/8260, 6010, 8080/8150
LF031	Soils/groundwater	8240/8260, 6010, 8080/8150
LF032	Soils/groundwater	8240/8260, 6010, 8080/8150
LF033	Soils/groundwater	8240/8260, 6010, 8080/8150

* Sludge/leachate may also be collected if observed (same parameters apply)

1. WE - Wetland East

2. WW - Wetland West

3. LF - Landfill

2. Area 2 - Landfill - Sample locations in the fill area have been proposed on a grid which is shown in **Figure 2**. The grid will be laid out across the fill area prior to sample collection. Thirty three sample locations are shown on the grid. The actual number of samples may vary according to site conditions and accessibility but collection of thirty samples is anticipated. This sampling plan is aimed at providing the best coverage to attempt to locate any hot spots within the fill and to provide data for additional sample collection at a later date.

A Geoprobe unit will advance collection rods through the fill material, identify the fill/native soil interface, and collect a soil sample from native soils at the natural surface. Following soil collection, the rods will be advanced to groundwater. Approximate depth to the water table will be determined and noted in the field book. Samples will be collected using a peristaltic pump, placed in precleaned sample containers with appropriate preservatives, and labeled. Appendix D - Geoprobe is a summary of Geoprobe system capabilities.

AES anticipates that advancing the Geoprobe through the fill material may be extremely difficult due to the amount of large construction type material involved. The grid will be used as a basis for sampling locations but actual sampling points may vary. The final boring locations will be noted on a revised site drawing in relation to a fixed surveyed datum point which will be installed before sampling

activities begin.

3. Area 3 - Wetlands, floodplain west of the fill - DHEC detected leachate from the fill and a sludge-like material in this area and collected a sample which revealed the presence of toluene at 3.04 mg/kg. A minimum of three sediment and three surface water samples will be collected in this area. A leachate sample will be collected and a full suite of analyses run to confirm the presence of toluene and to identify other contaminants present. The analytical results will be reviewed to assess impact to wetland soils and surface waters which enter the Reedy River.

D. Sampling Procedures

1. Quality Control - This section provides a discussion of the procedures to be utilized for all the sampling that is to be completed during this preliminary investigation at the CSX Vaughn Landfill. The methods to be utilized in collecting the samples for this study will strictly adhere to the EPA Region IV Standard Operating Procedures and Quality Assurance Manual, April, 1986. The standard operating procedures utilized by AES personnel in all sampling activities follow a standardized QA/QC procedure. The procedures are documented in the AES Field Quality Assurance/Quality Control Procedures Manual (QA/QP).

Groundwater, surface water, sediment and soil samples will be collected. The purpose of collecting surface water, sediment and subsurface soil samples is to prepare a basis for additional sample collection and to compare future analytical results. In addition to utilizing standard operating procedures, other means will be utilized to reduce variability in sampling and handling procedures. The sampling containers will be precleaned prior to use. Shipping blanks will detect problems associated with the handling and shipment of samples. Shipping blanks will be included with sample containers provided by the DHEC certified laboratory chosen to perform sample analyses. Field blanks will be used to monitor decontamination techniques. Field blanks will be obtained by running analyte free deionized water through sample collection equipment after decontamination has been completed (Geoprobe rods and hand auger buckets). Field blanks will be collected at a rate of one (1) per sampling day.

The samples will be shipped to the laboratory at the end of each sample day. At that point, the sample will remain in the custody of the laboratory until final disposal of the samples. The laboratory will be given the responsibility of final disposal of the samples.

2. Documentation - An integral part of the sampling effort will be the documentation of all field operations. The documentation process will include completion of

sample labels, field logbook and chain of custody forms. Immediately after collecting a sample, a completed sample label will be affixed to the same container. The label will contain the following information:

- Sample identification number
- AES Job Number
- Name of Sample collected
- Date and time of collection
- Project location
- Preservatives used (if any)
- Parameters requested

A logbook will be maintained by sampling personnel to document field activities. The following information will be documented in the field logbook:

- Persons present onsite, their title and affiliation
- Date of each day onsite
- The times on and offsite
- The time each sample is collected or other significant events occur
- The daily weather conditions and approximate temperatures
- All equipment to be used during field activities and their decontamination

procedures (if applicable)

- Any comments, observations, discrepancies or changes in sampling procedures
- Groundwater levels, method of measurement and where the measurement is taken, (approximate for Geoprobe sampling)
- The type of sample collected, (groundwater, soil) whether it is a grab or composite sample
- Appearance, odor, pH, and the temperature (if required) of the sample
- The number and type of sample containers to be used
- The number of bails to be used to collect each water sample
- All data related to the calibration of field equipment
- Sample preservatives to be used, type of packaging, where the samples are to be sent

A chain-of custody form will be completed for each set of samples collected in order to document sample possession from the time the samples are sent to the analytical laboratory. All samples will be transported to the laboratory by overnight courier the same day they are collected.

E. Sample Designation

Figure 3 indicates the location and designations of thiry eight (38) proposed sampling points. AES proposes collecting two samples in the wetland east of the fill, thirty three samples within the fill, and three samples in the floodplain west of the fill. As explained in Section III-C above, the number and actual locations of samples collected may vary depending on site conditions, obstructions, and location of any suspected contaminants noted during field observations. The exact location of sampling points will be documented using a reference point, in this case the surveyed datum point tied to a USGS bench mark. Samples will be designated as follows:

WE001 - Samples designated with the alpha prefix WE (wetland east) will be those collected within the wetlands or adjoining areas east of the fill. A sequential numeric code will also be assigned to each sample and appropriately recorded on all field documentation. A minimum of two sediment and two surface water samples shall be collected from this area.

LF001 - Samples collected below the fill material at the fill/native soil interface shall be designated with the alpha prefix LF (landfill) and sequentially numbered. A minimum of thirty samples shall be collected in the fill material.

WW001 - Samples collected in the wetlands, floodplain, or adjoining areas west of the fill shall be designated with the alpha prefix WW (wetland west) and sequentially numbered. A minimum of three samples shall be collected in this area.

F. Decontamination Procedures

Before sampling activities begin, and between sampling intervals and locations, decontamination of equipment shall be performed. A temporary decontamination area will be constructed using 4" x 4" timbers and 6-mil visqueen at the north end of the landfill off Bramlette Road. All downhole and sample collection equipment shall be cleaned using laboratory-grade detergent and potable water. Isopropanol and 1% dilute hydrochloric acid will follow and precede deionized water rinses. A field blank will be collected at least once per day from rinseate of deionized water from selected equipment. Wash water collected in the decon area will be pumped into drums and labeled for proper disposal.

All personnel handling downhole equipment, sampling tools, or sample bottles will be required to wear disposable vinyl or latex gloves.

IV. REPORT PREPARATION

A report will be prepared and submitted to DHEC following receipt and analysis of laboratory data. The report will include details of all field activities, record reviews, sample collection, and sample data results. Tables and graphics will be submitted which indicate the types and extent of contaminants found during the field investigation. Recommendations will be presented for additional sampling or remediation of affected soils or groundwater.

V. SCHEDULE OF EVENTS

Following DHEC approval of the workplan, field activities will proceed within ten (10) working days. Field operations are expected to take approximately one (1) week. Laboratory results are expected to be received within two (2) weeks of sample submittal. Because of the large number of samples to be collected and data to be reviewed, AES expects thirty (30) days will be required to prepare and submit a report to DHEC. Total time between the initiation of field activities and submittal of the report to DHEC is projected to be seven (7) weeks. Factors affecting this schedule include unforseen field conditions and/or additional sampling requirements which involve a return to the Site.

APPENDIX A

SCDHEC LETTER TO CSX

South Carolina
DHEC
Department of Health and Environmental Control

Commissioner: Douglas E. [illegible]yant

Board: John H. Burriss, Chairman
Richard E. Jabbour, DDS, Vice Chairman
Robert J. Stripling, Jr. Secretary
William E. Applegate, III
Toney Graham, Jr., MD
Sandra J. Molander
John B. Pate, MD

Promoting Health, Protecting the Environment

August 24, 1994

CERTIFIED MAIL P 705 309 554
RETURN RECEIPT REQUESTED

Mr. Marshall Williams
CSX Railroad
6737 Southpoint Drive South
Jacksonville, FL 32216

Re: Bramlette Rd. Property
Greenville County

Dear Mr. Williams:

In conjunction with the US Army Corps of Engineers, this office has been investigating property owned by CSX Railroad on which an unpermitted construction and demolition landfill has been operated. The property is located adjacent to the Reedy River near Greenville, SC.

During a site visit on April 19, 1994, Department personnel observed leachate entering a drainage ditch/ small creek at the site (see attached location map). The leachate was black and had a hydrogen sulfide odor. On May 3, 1994 Department personnel collected a sample of the leachate to be analyzed for volatile organic compounds and base/neutral acid extractables. Toluene was detected in the sample at a concentration of 3.04 mg/kg. Attached please find the analytical results.

During a site visit on May 31, 1994, Department and Corps of Engineers personnel observed a sludge-like material in the wetlands area located between the landfill and the railroad tracks. The material was black with a strong petroleum odor. A similar material has been observed by Department and Corps of Engineers personnel during other site visits.

Based on the site visits and the analytical results, a release to the environment has occurred and soil and surface water (and possibly ground water) at the site have been impacted. It is not known at this time if the impact has been caused by one or several sources. CSX must conduct an assessment of the site to determine the horizontal and vertical extent of contamination. Please be advised that the analysis conducted on the leachate was not intended to identify all contaminants at the site but was intended to provide an indication of impact to the environment. CSX must identify which compounds are present and must determine the level of contamination present at the site.

Please submit a work plan to this office for approval by October 17, 1994. The work plan should include the methods for determining the types and extent of contaminants present and the locations of samples to be taken.

Thank you very much for your help in this matter. If you have any questions, please contact me at (803) 241-1090.

Sincerely,

Mary Anderson

Mary Anderson
Environmental Quality Manager

cc: Fred Veal, Army Corps of Engineers

SOUTH CAROLINA DEP[illegible]TMENT OF HEALTH AND ENVIR[illegible]MENTAL CONTROL
Environmental Quality Control
Analytical Services Sample Request for Organic Compounds in Solid Waste and Groundwater Protection Samples

RC

Sample Location [illegible] LANDFILL County PICKENS

Comments

Date 5-3-94 Collected By [illegible] An "X" in the small column indicates test requested.

Sample Type: 1. Water 2. Soil/Sediment 3. Hazardous Waste 4. Other [illegible]

Time Collected (Milit.)		1615		
Station No.		1		
Lab. No.		6503948421		
Pesticides/PCBs				
Herbicides				
PCBs				
Base Neutral/Acid Extractables	(X)			
Volatile Organics	(X)			
Petroleum Hydrocarbons				

Comments

Date Received in Regional Laboratory [illegible] by [illegible]

Date Released from Regional Laboratroy [illegible] by [illegible]

Date Received in Central Laboratory [illegible] by [illegible]

Date Released from Central Laboratory [illegible] by [illegible]

SOUTH CAROLINA DEPARTMENT OF HEALTH AND ENVIRONMENTAL CONTROL
ANALYTICAL SERVICES DIVISION LABORATORY REPORT

SAMPLE NUMBER : C9C3948427
CHARGE NUMBER : RC
COLLECTED BY : D KLAUCK
COUNTY : PICKENS
SAMPLE DESCRIPTION : CCX/VAUGHN LANDFILL
SAMPLE TYPE :

WEDNESDAY AUGUST 10TH, 1994
RELEASE DATE : 09/10/94 13:46:41
DT COLLECTED : 09/03/94 10:15:00
SAMPLE MEDIUM : WATER
STATION CODE : 1

ANALYSIS	STORET	RESULT
N-NITROSODIMETHYLAMINE MG/KG		<10.0
ANILINE MG/KG		<10.0
PHENOL MG/KG	79690	<10.0
BIS(2-CHLOROETHYL)ETHER MG/KG	79560	<10.0
2-CHLOROPHENOL MG/KG	79526	<10.0
1,3-DICHLOROBENZENE MG/KG	79516	<10.0
1,4-DICHLOROBENZENE MG/KG	79517	<10.0
BENZYL ALCOHOL MG/KG		<10.0
1,2-DICHLOROBENZENE MG/KG	79511	<10.0
2-METHYLPHENOL MG/KG		<10.0
BIS(2-CHLOROISOPROPYL)ETHER MG/KG		<10.0
4-METHYLPHENOL MG/KG		<10.0
N-NITROSODI-N-PROPYLAMINE MG/KG		<10.0
HEXACHLOROETHANE MG/KG	79636	<10.0
NITROBENZENE MG/KG	79572	<10.0
ISOPHORONE MG/KG	79646	<10.0
NITROPHENOL MG/KG	79529	<10.0
2,4-DIMETHYL PHENOL MG/KG	79522	<10.0
BENZOIC ACID MG/KG		<10.0
BIS(2-CHLOROETHOXY)METHANE MG/KG		<10.0
2,4-DICHLOROPHENOL MG/KG	79521	<10.0
1,2,4-TRICHLOROBENZENE MG/KG	79507	<10.0
NAPHTHALENE MG/KG	79670	<10.0
4-CHLOROANILINE MG/KG		<10.0
HEXACHLOROBUTADIENE MG/KG	79634	<10.0
4-CHLORO-3-METHYL PHENOL MG/KG		<10.0
2-METHYL NAPHTHALENE MG/KG		<10.0
HEXACHLOROCYCLOPENTADIENE MG/KG	79635	<10.0
2,4,6-TRICHLOROPHENOL MG/KG	79530	<10.0
2,4,5-TRICHLOROPHENOL MG/KG		<10.0
2-CHLORONAPHTHALENE MG/KG	79527	<10.0
2-NITROANILINE MG/KG		<10.0
DIMETHYL PHTHALATE MG/KG	79611	<10.0
ACENAPHTHYLENE MG/KG	79532	<10.0
2,6-DINITROTOLUENE MG/KG	79525	<10.0
3-NITROANILINE MG/KG		<10.0
ACENAPHTHENE MG/KG	79537	<10.0
4-NITROPHENOL MG/KG	79536	<10.0
DIBENZOFURAN MG/KG		<10.0
2,4-DINITROTOLUENE MG/KG		<10.0
DIETHYL PHTHALATE MG/KG	79655	<10.0
4-CHLOROPHENYL PHENYL ETHER MG/KG	79555	<10.0

SOUTH CAROLINA DEPARTMENT OF HEALTH AND ENVIRONMENTAL CONTROL
ANALYTICAL SERVICES DIVISION LABORATORY REPORT

SAMPLE NUMBER : C503946427
CHARGE NUMBER : 3C
COLLECTED BY : U KLAUCK
COUNTY : PICKENS
SAMPLE DESCRIPTION : CCX/VALCHR LANDFILL
SAMPLE TYPE :

WEDNESDAY AUGUST 10TH, 1994
RELEASE DATE : 08/10/94 13:46:41
DT COLLECTED : 05/03/94 10:15:00
SAMPLE MEDIUM : WATER
STATION CODE : 1

ANALYSIS	STORET	RESULT
FLUORENE MG/KG	79622	<10.0
4-NITROANILINE MG/KG		<10.0
AZOBENZENE MG/KG		<10.0
2-METHYL-4,6-DINITROPHENOL MG/KG		<10.0
N-NITROSODIPHENYLAMINE MG/KG	79669	<10.0
4-BROMOPHENYL PHENYL ETHER MG/KG	79634	<10.0
HEXACHLOROBENZENE MG/KG	79635	<10.0
PENTACHLOROPHENOL MG/KG	79670	<10.0
PHENANTHRENE MG/KG	79692	<10.0
ANTHRACENE MG/KG	79545	<10.0
DI-N-BUTYLPHTHALATE MG/KG		<10.0
FLUORANTHENE MG/KG	79625	<10.0
PYRENE MG/KG	79702	<10.0
BUTYLBENZYL PHTHALATE MG/KG		<10.0
3,3'-DICHLOROBENZIDINE MG/KG		<10.0
BENZO(A)ANTHRACENE MG/KG		<10.0
CHRYSENE MG/KG	79573	<10.0
BIS(2-ETHYLHEXYL)PHTHALATE MG/KG	79582	<10.0
DI-N-OCTYLPHTHALATE MG/KG		<10.0
BENZO(B)FLUORANTHENE MG/KG		<10.0
BENZO(K)FLUORANTHENE MG/KG		<10.0
BENZO(A)PYRENE MG/KG		<10.0
INDENO(1,2,3-CD)PYRENE MG/KG	79644	<10.0
DIBENZO(A,H)ANTHRACENE MG/KG		<10.0
BENZO(GHI)PERYLENE MG/KG		<10.0
CHLOROMETHANE MG/KG		<1.0
VINYL CHLORIDE MG/KG	79773	<1.0
BROMOMETHANE MG/KG		<1.0
CHLOROETHANE MG/KG	79581	<1.0
TRICHLOROFLUOROMETHANE MG/KG	79714	<1.0
1,1-DICHLOROETHENE MG/KG	79503	<1.0
METHYLENE CHLORIDE MG/KG	79602	<1.0
TRANS-1,2-DICHLOROETHENE MG/KG	79515	<1.0
1,1-DICHLOROETHANE MG/KG	79504	<1.0
CHLOROFORM MG/KG	79589	<1.0
1,1,1-TRICHLOROETHANE MG/KG	79500	<1.0
CARBON TETRACHLORIDE MG/KG	79581	<1.0
BENZENE MG/KG	79551	<1.0
1,2-DICHLOROETHANE MG/KG	79572	<1.0
TRICHLOROETHENE MG/KG	79719	<1.0

SOUTH CAROLINA DEPARTMENT OF HEALTH AND ENVIRONMENTAL CONTROL
ANALYTICAL SERVICES DIVISION LABORATORY REPORT

SAMPLE NUMBER : 05C3948427
CHARGE NUMBER : RC
COLLECTED BY : U KLAUCK
COUNTY : PICKENS
SAMPLE DESCRIPTION : COX/VALGHN LANDFILL
SAMPLE TYPE :

WEDNESDAY AUGUST 10TH, 1994
RELEASE DATE : 08/10/94 13:46:41
DT COLLECTED : 05/03/94 10:15:00
SAMPLE MEDIUM : WATER
STATION CODE : 1

ANALYSIS	STORET	RESULT
1,2-DICHLOROPROPANE MG/KG	79513	<1.0
BROMODICHLOROMETHANE MG/KG		<1.0
2-CHLOROETHYLVINYL ETHER MG/KG	79526	<1.0
CIS-1,3-DICHLOROPROPENE MG/KG		<1.0
TOLUENE MG/KG	79715	3.04
TRANS-1,3-DICHLOROPROPENE MG/KG		<1.0
1,1,2-TRICHLOROETHANE MG/KG	79503	<1.0
TETRACHLOROETHENE MG/KG	79709	<1.0
DIBROMOCHLOROMETHANE MG/KG		<1.0
CHLOROBENZENE MG/KG	79586	<1.0
ETHYL BENZENE MG/KG	79624	<1.0
BROMOFORM MG/KG	79563	<1.0
1,1,2,2-TETRACHLOROETHANE MG/KG	79501	<1.0
1,3-DICHLOROBENZENE MG/KG	79516	<1.0
1,4-DICHLOROBENZENE MG/KG	79517	<1.0
1,2-DICHLOROBENZENE MG/KG	79511	<1.0

COMMENTS:

APPENDIX B

SOIL SURVEY

USDA-SCS
Columbia, South Carolina
August 1989

HYDRIC SOILS - GREENVILLE COUNTY

Symbol	Map Unit Name	Hydric Soil Component	Location
Ca	Cartecay and Chewacla soils	Wehadkee inclusions 1,2,3	Low lying areas
Cb	Cartecay and Toccoa soils	Wehadkee inclusions 1,2,3	Low lying areas
Cv	Chewacla soils	Wenadkee inclusions 1,2,3	Low lying areas
Cw	Congaree fine sandy loam	Wehadkee inclusions 1,2,3	Low lying areas
Wd	Wehadkee soils 1,2,3	Whole map unit	N/A

Even though not listed here, other upland units in this county may have small included areas of hydric soils.

All areas that are shown by the use of a wet spot symbol possibly have hydric soil properties.

1 - Hydric due to a saturation only

2 - Support woody vegetation naturally

3 - Are seasonally flooded or ponded

4 - Can be farmed w/out removing woody vegetation

SCS

H CAROLINA — SHEET NUMBER 36

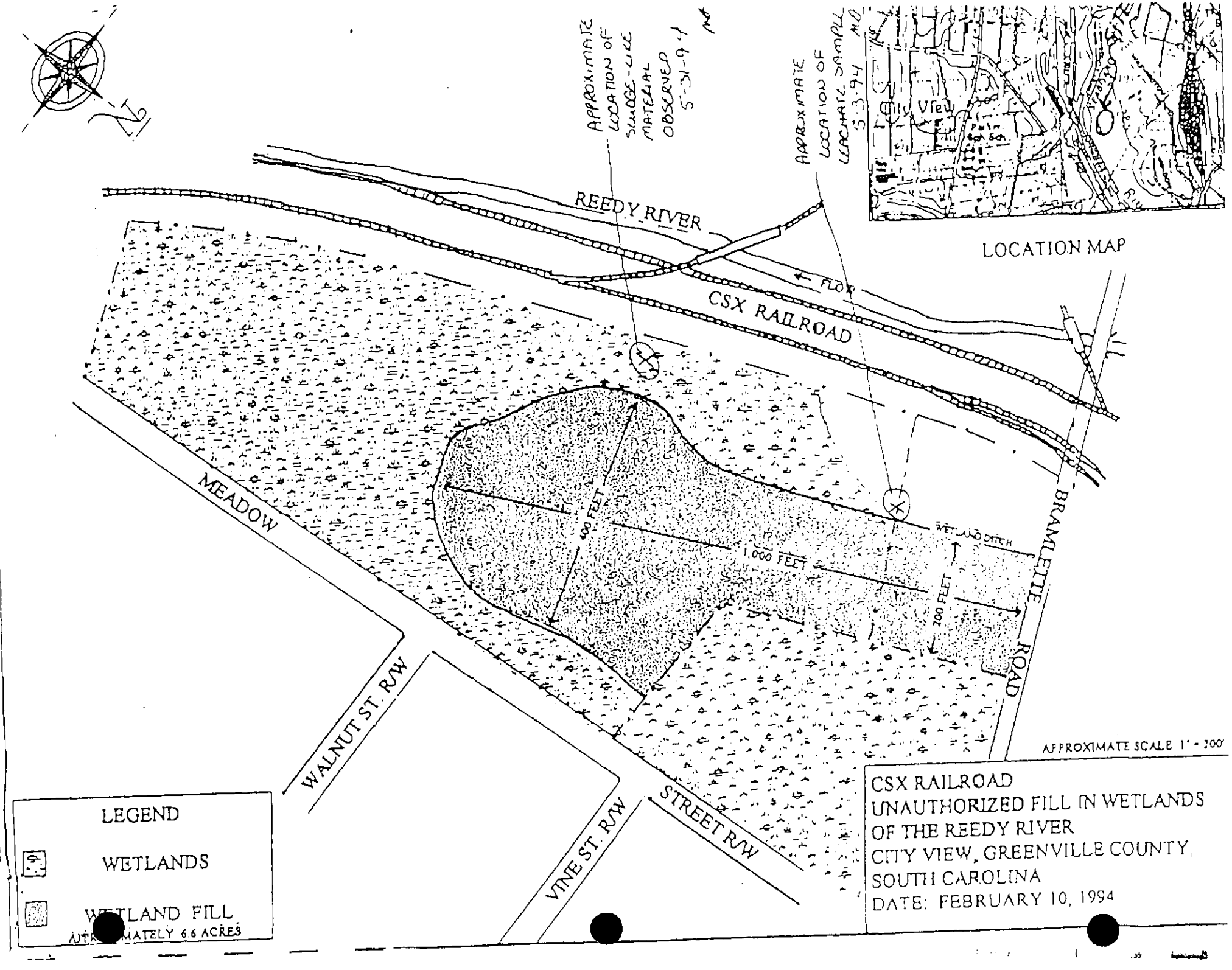

APPENDIX C

WELL SURVEY

Table 25. Record of Wells in Greenville County, South Carolina (continued)

Well	Location		Owner	Driller	Date drilled	Depth (feet)		Diameter (inches)	Water level		Yield (gallons per minute)	Rock type	Topographic situation	Use	Remarks
	Latitude	Longitude				Total	Casing		Depth below land surface (feet)	Date					
286	34°38'50"	82°23'20"	Ellen Woodside School	Robbins	3/54	230	85	6			20	ggn	flat	P	Pa
287	35°02'25"	82°17'50"	Mr. Woods	Sloan	9/58	50		24				mggn	slope	D	B
288	34°54'15"	82°19'35"	Miss Shooks	Robbins	9/51	127	80	6			10-12	gsc	hill	D	abd
289	34°56'20"	82°17'50"	Mrs. Edens	do	1/58	75	70	6			5	gsc	flat	D	Pa
290	34°48'10"	82°21'15"	Perry Earle, Jr.	do	12/52	62	42	6			8	ms	hill	D	
291	34°54'20"	82°20'55"	Southern Worsted	--		17-27		2				gsc	draw	I	5 wells
292	34°54'55"	82°23'25"	O.N. Eastland	Robbins	8/61	230	33	6			5	bhgn	slope	D	
293	35°03'10"	82°31'15"	Lindsey Forrester	do	7/55	82	53	6			15	bgn	hill	D	Pa
294	34°53'20"	82°22'50"	A.G. Tractor & Implement Co.	do	11/55	71	45	6			15-20	gsc	flat	I	Pa
295	34°46'40"	82°21'05"	Lindsey Forrester	do	6/52	183	120	6			10	ms	slope	D	
296	34°46'35"	82°20'30"	Massey Ferguson	do	12/56	86	68	4	22.25	5/62	8	ms	slope	I	Pa
297	34°53'40"	82°22'50"	John B.A. Burns	do	6/54	97	84	6			4	gsc	slope	D	
298	34°46'25"	82°15'00"	Joe Finley	do	4/60	180	60	6	75	1960	15	ms	flat	D	Pa
299	34°51'25"	82°20'10"	Albert Forrest	do	5/51	100	53	6				ggn	slope	D	
300	34°51'40"	82°19'10"	Frank E. Friddle	do	5/58	245	108	6	13	1958	2	ggn	slope	D	
301	34°51'40"	82°19'10"	do	do	7/60	100	89	6			14	ggn	slope	D	
302	34°55'20"	82°26'55"	Furman University	do	11/53	148	143	6			10	gsc	flat	D	abd
303	34°45'45"	82°17'45"	Miss Norma Flynn	do	11/55	120	103	6			15	ggn	flat	D	
304	34°49'30"	82°27'00"	J.F. Futch	do	3/50	107	40	6			8	ggn	flat	D	
305	35°04'50"	82°22'20"	Polly Crisp	do	1948	110	63	6	8	1948	10-12	mggn	flat	D	
306	34°53'10"	82°21'10"	Louis E. Freeman	do	5/53	83	70	6			25	gsc	slope	D	
307	35°02'10"	82°18'05"	Few's Methodist Church Chapel	do	6/63	91	63	6			5	mggn	slope	P	R
308	34°54'50"	82°22'45"	Mr. Brown	do	8/63	175	90	6			3	gsc	slope	D	R
309	34°55'15"	82°17'45"	T.P. Ayers	do	10/58	120	23	6			20	gsc	slope	I	Launderette
310	34°52'02"	82°20'40"	R.M. Hill	do	2/55	84		6	27	1955	15-20	ggn	slope	D	
311	34°44'05"	82°15'30"	Woodside Mill	do	9/47	200	62	6	25	1947	40	ms	draw	I	Well #1
312	34°44'05"	82°15'30"	do	do	9/47	195	62	6	25	1947	15	ms	draw	I	Well #2;abd
313	34°44'05"	82°15'30"	do	do	10/47	176	65	6	4	1947	100	ms	valley	I	Well #3
314	34°59'40"	82°31'20"	Shiloh Baptist Ch.	do	6/55	120	76	6			4	bgn	slope	P	
315	34°51'35"	82°25'35"	Parker High School	do	12/48	205	41	6	3	1948	20	ggn	flat	P	abd

[illegible]	34°4[illegible]	82°[illegible]0"	[illegible]de [illegible]	do	9[illegible]	20[illegible]	[illegible]	[illegible]	25	1947	15	ms	draw	I	well #2;abd
312	34°44'05"	82°15'30"	do	do	10/[illegible]	195	62	6	4	1947	100	ms	valley	I	Well #3
313	34°44'05"	82°15'30"	do	do	6/55	176	65	6			4	bgn	slope	P	
314	34°59'10"	82°31'20"	Shiloh Baptist Ch	do	12/48	120	76	6	3	1948	20	ggn	flat	P	abd
315	34°51'35"	82°25'35"	Parker High School	do		205	41	6							

Table 25. Record of Wells in Greenville County, South Carolina (continued)

Well	Location		Owner	Driller	Date drilled	Depth (feet)		Diameter (inches)	Water level		Yield (gallons per minute)	Rock type	Topographic situation	Use	Remarks
	Latitude	Longitude				Total	Casing		Depth below land surface (feet)	Date					
316	34°51'35"	82°25'30"	Parker High School	Robbins	1/48	300	35	6	3	1948	15	ggn	flat	P	Well #2;abd
317	34°45'35"	82°21'15"	Greenville Gun Cl[illegible]	do	12/50	102	30	6			2	ggn	slope	C	
318	35°01'55"	82°21'20"	Mt. View School	do	6/56	90	42	6			7	bgn	flat	P	
319	35°02'35"	82°15'05"	Jordan School	do		220		6			20	mggr	flat	P	Pa
320	34°55'15"	82°18'15"	1st Baptist Church Parsonage, Taylor	do	6/51	105	52	6	36.46	7/62	25	gsc	hill	D	
321	34°41'10"	82°20'50"	Oak Grove Trailer Court	do	6/57	140		6			12	ms	hill	C	
322	35°04'00"	82°22'30"	North Greenville Jr. College	do	7/59	80	39	6			20	mggr	draw	P	
323	34°51'10"	82°20'20"	Wm. S. Middleton	do	5/62	110	80	6			10	ggn	slope	D	
324	35°04'05"	82°22'30"	North Greenville Jr. College	do	7/59	93	33	6			25	mggr	draw	P	
325	34°43'35"	82°23'05"	Moonville Method-ist Church	do	8/60	103	42	6			200	ggn	flat	C	
326	35°05'10"	82°14'50"	Liberty Church	do	4/62	102	84	6			10	mggr	slope	C	Pa
327	35°00'50"	82°25'25"	A.W. Hines	do	4/63	115	15	6			15	bgn	valley	D	R, Ca
328	34°50'55"	82°16'05"	Mr. Crawford	do	4/63	105	60	6			20	gsc	slope	D	R, Pa
329	34°45'20"	82°25'30"	Mr. McGee	do	6/63	140	53	6			5	ggn	valley	D	R, Pa
330	34°55'20"	82°24'45"	Jack Whitted	do	10/57	117	55	6			10-12	gsc	slope	D	
331	34°57'15"	82°24'55"		do	1/64	67	30	6			15	gsc	draw	D	R
332	34°55'15"	82°24'55"	Robert Whitted	do	10/57	91	45	6	60	1957		gsc	slope	D	
333	34°49'05"	82°22'00"	Thomas C. Wyche	do	5/51	120	38	6			2	ms	slope	D	abd
334	34°49'05"	82°22'00"	do	do	5/51	55	28	6				ms	slope	D	Well #2
335	34°48'50"	82°21'20"	R.S. Small	do	1/53	161	21	6			10	ms	hill	D	
336	34°46'05"	82°21'25"	Vince Hendricks	do	4/63	90	20	6			20	ms	hill	D	R
337	34°48'25"	82°25'55"	Greenville Con-crete Co.	do	1963	247	21	6	28.05	8/63	7	ggn	flat	I	R
338	34°45'25"	82°09'55"	Harold Cooper	do	5/63	160	100	6	22.86	11/63	5	ggn	flat	I	R
339	34°48'20"	82°22'30"	J.R. Terry	do	4/50	109	40	6	49	1950		ms	slope	D	des
340	34°47'20"	82°19'30"	Jack Geer	do	5/57	167	35	6			40-50	ms	slope	D	abd
341	34°46'30"	82°19'40"	Henry A. Smith	do	4/55	250	30	6	35	1955	4	ms	flat	D	
342	34°58'10"	82°20'00"	Clyde Bayne	do		60	20	6			3	bhgv	slope	D	

Table 2- Record of Wells in Greenville County, South Carolina (continued)

Well	Location		Owner	Driller	Date drilled	Depth (feet)		Diameter (inches)	Water level		Yield (gallons per minute)	Rock type	Topographic situation	Use	Remarks
	Latitude	Longitude				Total	Casing		Depth below land surface (feet)	Date					
343	34°56'20"	82°20'50"	Earl Bridges	Robbins	12/53	165	140	6			20	gsc	slope	D	
344	34°41'35"	82°11'10"	Hugh Cooper	do	5/63	26	8	6			2	ggn	flat	D	R
345	34°4[illegible]'25"	82°20'00	Reedy River Presbyterian Church parsonage	do	8/59	120	40	6			25	ms	flat	D	
346	35°03'30"	82°22'25"	Mr. Brown	do	11/62	105	42	6			9	mggn	hill	D	Pa
347	34°44'15"	82°16'25"	Palmetto Nursery	do	12/60	115	70	6			35	ms	valley	Ir	Pa
348	34°41'25"	82°14'20"	Dr. W.R. McLawhorn, Jr.	do	4/61	71	44	6			50	gr	draw	D	Pa
349	34°41'25"	82°14'25"	do	do	4/60	130	50	6			5	gr	hill	D	
350	34°43'10"	82°17'00"	Clyde Wrenn	do	4/58	130		6				ms	flat	D	Pa
351	34°52'15"	82°20'10"	J.D. Spencer	do	5/50	177	128	6	35	1950	10	ggn	hill	D	Pa; serves 3 houses
352	34°52'10"	82°19'05"	Arthur Johnson	do	8/55	135	93	6			15-20	gsc	slope	D	
353	34°52'05"	82°20'55"	E.W. Hudson	do	2/52	45	27	6			10-15	ggn	slope	D	
354	34°56'15"	82°18'30"	George Copeland	do	5/62	112	49	6			3	gsc	slope	D	
355	34°53'[illegible]0"	82°18'00"	Mrs. Ann Hale	do	9/52	120	61	6	25	1952	15	gsc	flat	D	
356	34°52'[illegible]5"	82°21'00"	N.L. Parsons	do	4/50	60	20	6				ggn	slope	D	
357	34°52'[illegible]0"	82°20'30"	Mr. Grant	do	11/55	86	74	6			5	ggn	slope	D	
358	34°52'[illegible]	82°20'35"	J.G. Ridgeway	do	1/51	82		6				ggn	slope	D	
359	34°55'[illegible]0"	82°19'40"	W.B. Shockley	do	1/54	125	85	6			8	gsc	slope	D	Pn
360	34°54'6[illegible]"	82°20'00"	Dr. G.W. Smith	do	3/52	150	74	6	18.61	9/62	10-12	gsc	flat	D	abd; served 6 houses
361	34°44'30"	82°11'25"	Hugh Cooper	do	5/63	84	10	6			1	ggn	flat	S	R
362	35°03'1[illegible]"	82°19'55"	M.L. Knight	do	12/59	120	54	6			10	bgn	draw	D	
363	35°04'1[illegible]"	82°28'15"	Stewart Gaffney	do	8/58	85	60	6	12	1958	2	mggn	valley	D	
364	34°43'1[illegible]"	82°18'15"	Mr. Alexander	do	5/63	114	50	6			8	ggn	slope	D	R, Pa
365	34°57'1[illegible]	82°27'35"	Herman Hipp	do	8/57	250	92	6			20	bhgn	slope	D	
366	34°57'1[illegible]	82°27'50"	Calhoun Hipp	do	4/56	200	55	6	10	1956	10	gsc	hill	D	
367	35°00'2[illegible]	82°24'50"	J.B. Hawkins	do		132	15	6			4	bhgn	flat	D	
368	34°58'3[illegible]	82°21'45"	Hugh Ivey	do	8/61	135	60	6			5	bhgn	slope	D	
369	35°07'2[illegible]	82°32'10"	Mrs. Griffin	do	10/60	123	90	6				mggn	valley	D	
370	34°57'0[illegible]	82°26'25"	J.F. Watts	do	4/56	115	50	6	6	1956	20	bhgn	valley	C	abd

366	34°57' [illegible]	82°2[illegible]' [illegible]0"	[illegible]		[illegible]	2[illegible]	[illegible]	[illegible]	[illegible]	[illegible]		[illegible]	gsc	[illegible]		
	35° [illegible]	82° [illegible] 30"	[illegible], Hawk[illegible]	do	[illegible]	132	15	6				4	bhgn	flat	D	
368	34°58' 35"	82°24'45"	Hugh Ivey	do	8[illegible]	135	60	6				5	bhgn	slope	D	
369	35°07' 20"	82°32'10"	Mrs. Griffin	do	10/60	123	90	6					mggn	valley	D	
370	34°57' 00"	82°26'25"	J.F. Watts	do	4/56	115	50	6	6	1956		20	bhgn	valley	C	abd

Table 25 Record of Wells in Greenville County, South Carolina (continued)

Well	Location		Owner	Driller	Date drilled	Depth (feet)		Diameter (inches)	Water level		Yield (gallons per minute)	Rock type	Topographic situation	Use	Remarks
	Latitude	Longitude				Total	Casing		Depth below land surface (feet)	Date					
371	35°06'10"	82°36'25"	WFDC-TV	Robbins	7/58	135	30	6			2	mggn	hill	C	Pa
372	35°00'10"	82°25'30"	Charles Sheppard	do	8/50	62	40	6				bgn	draw	D	
373	34°57'10"	82°25'20"	Wallace Randolph	do	9/61	125	44	6			4-5	gsc	hill	D	Pa
374	34°45'15"	82°25'50"	B.P. Cleveland	do	9/62	102	20	6	47	1962		ggn	hill	D	Pa
375	34°55'10"	82°25'25"	Ford Hester	do	4/63	115	86	6			50	gsc	slope	D	R
376	35°02'10"	82°33'10"	Marietta Baptist Camp	do	2/59	41	30	6			35	bgn	draw	C	Pa
377	35°04'00"	82°30'55"	Middle River Baptist Church	do	4/57	89	52	6	45	1957	5	mggn	hill	C	
378	34°43'10"	82°24'50"	Kenneth M. Geer	do	2/55	100	70	6				ggn	hill	D	
379	34°43'10"	82°24'20"	Vance Drawdy	do	4/53	252	26	6			8	ggn	hill	D	
380	34°43'10"	82°25'00"	C.D. Griggs	do	2/62	112	38	6			20	ggn	hill	D	
381	34°43'15"	82°24'10"	Lewis Hazlewood	do	1/52	71	60	6			6	ggn	hill	D	
382	34°42'15"	82°23'35"	A.H. Holtzclaw	do	2/56	123	85	6			5	ggn	hill	D	
383	34°43'10"	82°23'40"	A.W. Goforth	do	8/58	94	20	6			6	ggn	slope	D	
384	34°42'15"	82°22'45"	D.C. Waldrop	do	11/55	71	52	6	20	1955	2	ggn	slope	D	
385	34°43'15"	82°25'00"	J.W. Behrens	do	5/59	150	90	6			5	ggn	hill	D	
386	34°42'10"	82°23'25"	Mr. McKelvy	do	11/51	113	87	6			15	ggn	flat	D	
387	34°42'10"	82°26'10"	W.E. Mitchell	do	6/56	122	72	6			25-30	ggn	slope	D	Pa; 6 houses
388	34°43'10"	82°24'20"	Gunter Dairy	do	8/58	44	25	6			10	ggn	draw	D	
389	34°51'10"	82°18'15"	Calvin Gorett	do	2/60	95	70	6			25	gsc	flat	D	
390	34°52'10"	82°20'50"	John Granger	do	1/52	74	22	6			6	ggn	slope	D	
391	34°52'10"	82°20'55"	Mr. James	do	12/54	55	22	6				ggn	slope	D	
392	34°51'15"	82°18'50"	James D. Walters	do	9/56	138	36	6			25	ggn	flat	D	
393	34°51'15"	82°19'55"	Mr. Hungerford	do	2/52	207	76	6			5	ggn	hill	D	
394	34°51'15"	82°18'40"	A.S. McDaid	do	11/60	98		6			12	ggn	hill	D	
395								6							
396	34°46'15"	82°21'55"	S.D. Granger	do	5/58	151	93	6	38	1958	4	ggn	flat	D	
397	34°48'15"	82°25'20"	E.K. Hudson	do	1/53	90	35	6			6	ggn	slope	D	
398	34°46'10"	82°25'00"	Mr. Jones	do	3/55	61	31	6			10	ggn	flat	D	
399	34°46'10"	82°25'00"	do	do	8/54	180	30	6				ggn	flat	D	
400	34°46'15"	82°25'00"	Floyd Jones	do	9/53	138	30	6	24	1953	20	ggn	flat	D	
401	34°48'10"	82°25'25"	M.H. Peat	do	2/51	98	43	6			8	ggn	slope	D	

Table 25. Record of Wells in Greenville County, South Carolina (continued)

Well	Location		Owner	Driller	Date drilled	Depth (feet)		Diameter (inches)	Water level		Yield (gallons per minute)	Rock type	Topographic situation	Use	Remarks
	Latitude	Longitude				Total	Casing		Depth below land surface (feet)	Date					
402	34°45'25"	82°24'50"	Mr. Newlin	Robbins	8/50	144	137	6			7	ggn	flat	D	
403	34°54'58"	82°22'55"	T.W.D. Schafer	do	6/63	210	30	6			5	gsc	hill	D	R
404	34°48'30"	82°25'20"	R.L. Meaders	do	1/55	96	40	6			6-8	ggn	slope	D	
405	34°45'45"	82°24'55"	Stanley Lee	do	12/54	63	62	6			10	ggn	flat	D	
406	34°46'35"	82°24'55"	Mr. O'Conner	do	1/49	160	35	6	35	1949	1	ggn	flat	D	
407	34°47'10"	82°24'45"	Mr. Granger	do	2/51	92	90	6			10	ggn	flat	D	abd
408	34°51'40"	82°27'45"	J.M. Jolly	do	8/53	116		6			4	gsc	flat	D	abd
409	34°58'25"	82°28'55"	John Looper	do	10/60	125		6			½	bhgn	draw	D	Pa
410	34°51'45"	82°27'45"	Mr. Loyd, Jr.	do	9/51	137	22	6	11.68	11/62	6-7	gsc	flat	D	abd
411	34°49'40"	82°27'05"	Hayward Ballard	do	4/53	280	65	6			3	ggn	slope	D	des
412	34°47'55"	82°26'45"	Mr. Lunsford	do	11/50	132	60	6				ggn	slope	D	Serves 3 houses
413	34°47'10"	82°24'25"	Mrs. Minnie Martin	do	9/52	103	27	6	27.24	10/62		ggn	flat	D	abd
414	34°49'30"	82°27'05"	D.L. Moore	do	7/50	135		6			5-6	ggn	flat	D	
415	35°01'00"	82°22'50"	Locust Hill Baptist Church	Harris	1954	600	60	6	60	1954	0	ms	hill	C	abd
416	34°55'10"	82°28'05"	George Ross	Robbins	1/52	118	60	6			4	gsc	slope	D	
417	34°52'04"	82°20'40"	Mrs. Watson	do	7/55	60	17	6			20	ggn	slope	D	
418	34°52'05"	82°20'35"	Erskine Traynham	do	1/53	45	14	6			20	ggn	flat	D	
419	34°52'10"	82°28'00"	Mrs. Mae Williams	do	2/52	113	43	6			4	gsc	flat	D	abd
420	34°55'25"	82°28'25"	R.B. Wynn	Alexander	3/56	63		48	45-57	1956	8	bgn	hill	C	D
421	34°57'30"	82°20'00"	C.R. Moize	Robbins	11/62	120	90	6			1	bhgn	hill	D	
422	34°52'05"	82°28'05"	WQOK Radio Station	do	11/48	102	45	6			8	gsc	flat	C	abd
423	34°51'55"	82°20'25"	H.F. Sanders	do	11/55	83	22	6	20	1955	25	ggn	slope	D	
424	34°52'13"	82°20'35"	Mack E. Henry	do	3/54	22	18	6	22	1954	10 25	ggn	slope	D	Doesn't flow in summer
425	34°37'35"	82°16'50"	James Terry	do	1963	95	60	6			2	gr	slope	D	R
426	34°43'00"	82°26'40"	J.P. Stevens Co.	do	8/63	200	20	5	18.41	9/63	6	ggn	slope	I	R
427	34°42'55"	82°26'40"	do	Chandler	8/63	390	70	5			2	ggn	flat	I	des
428	34°42'55"	82°26'40"	do	do	8/63	145	20	5			0	ggn	flat	I	des
429	34°42'45"	82°26'40"	do	do	8/63	135	20	5	Flows		18	ggn	valley	I	Pa
430	34°42'45"	82°26'40"	do	do	8/63	150	20	5	1.45	9/63	12	ggn	valley	I	abd
431	34°42'45"	82°26'40"	do	do	8/63	143	35	5	6	1963	200	ggn	valley	I	Pa

[illegible]	[illegible]	[illegible]	do	[illegible]	[illegible]	145	[illegible]	5			0	ggn	flat	I	des
[illegible]	34°42'	82°	do	do	8/[illegible]	135	20	5	Flows		18	ggn	valley	I	Pa
429	34°42'[illegible]	82°26'40"	do	do	8/[illegible]	150	20	5	1.45	9/63	12	ggn	valley	I	abd
430	34°42'[illegible]	82°26'40"	do	do	8/63	143	35	5	6	1963	200	ggn	valley	I	Pa
431	34°42'[illegible]	82°26'40"													

Table 25. Record of Wells in Greenville County, South Carolina (continued)

Well	Location		Owner	Driller	Date drilled	Depth (feet)		Diameter (inches)	Water level		Yield (gallons per minute)	Rock type	Topographic situation	Use	Remarks
	Latitude	Longitude				Total	Casing		Depth below land surface (feet)	Date					
432	34°51'5[illegible]	82°20'25"	Mrs. H.H. Nodine	Robbins	10/56	129	42	6			20	ggn	flat	D	
433	34°52'0[illegible]	82°20'40"	D.D. Pou, Jr.	do		55	22	6			20	ggn	slope	D	
434	34°52'1[illegible]	82°20'30"	Frank W. Mahon	do	1954	65		6			12	ggn	slope	D	
435	34°33'5[illegible]	82°16'20"	Alton Rogers, Jr.	Chandler	1960	53		36			6	gr	flat	D	B, Pa
436	34°52'0[illegible]	82°20'35"	J.R.E. Panagakos	Robbins	7/55	42	10	6			30	ggn	slope	D	
437	34°52'0[illegible]	82°20'25"	Bert H. Reece	do	11/53	80	27	6			4	ggn	slope	D	
438	34°51'5[illegible]	82°20'15"	Milton J. Smeak	do	9/58	65	30	6			8-10	ggn	slope	D	
439	34°52'0[illegible]	82°20'40"	Jack H. Jarrell	do	7/52	70	41	6			20	ggn	slope	D	
440	34°46'5[illegible]	82°23'50"	J.W. Hall	do	5/51	102	40	6				ggn	flat	D	abd
441	34°47'0[illegible]	82°23'55"	do	do	5/51	103	32	6				ggn		D	abd
442	34°47'3[illegible]	82°25'15"	Frank Hall	do	8/50	122	70	6			8-10	ggn	flat	D	
443	34°48'1[illegible]	82°27'35"	C.L. Spells	do	2/58	110	65	6	62	1958	6	ggn	hill	D	
444	34°48'1[illegible]	82°27'25"	do	do	10/54	76	47	2½				ggn	slope	D	
445	34°48'2[illegible]	82°27'20"	Buck Johnson	do	12/60	82		6			12	ggn	slope	D	
446	34°41'2[illegible]	82°19'15"	Junius Garrison	do	6/61	119	55	6			4	ms	slope	D	Pa
447	34°39'1[illegible]	82°17'45"	Joe Jacks	do	8/61	133	55	6			2-3	gr	hill	D	Pa
448	34°55'2[illegible]	82°24'00"	Allen J. Graham, Jr	do	2/58	154	92	6	75	1958	10	gsc	slope	D	
449	34°55'2[illegible]	82°24'50"	Dr. E.F. Gaynor	do	6/61	140		6			25	gsc	slope	D	
450	34°54'1[illegible]	82°24'30"	J.D. Henry	do	4/50	130	50	6			8-10	gsc		D	
451	34°33'1[illegible]	82°18'00"	G.E. Taylor	do	1959	152		6				gr	flat	D	Pa
452	34°55'1[illegible]	82°24'50"	Milton H. Hester	do	8/53	220	63	6			4	gsc		D	
453	34°54'1[illegible]	82°24'25"	W.S. Horton	do	4/50	118	31	6			50	gsc	slope	D	Pa
454	34°54'2[illegible]	82°24'15"	Roy A. Hill	do	6/51	100	56	6			12-15	gsc	slope	D	
455	34°55'0[illegible]	82°23'25"	Mrs. Joe H. Hall	do		171	38	6	32		5	bhgr	slope	D	
456	34°54'2[illegible]	82°23'20"	D.C. Pulley	do	2/54	145	70	6			5	bhgr	slope	D	
457	34°31'5[illegible]	82°22'00"	Boyd Wooten	Chandler	1961	47		36			5	ggn	flat	D	B, Pa
458	34°56'1[illegible]	82°24'30"	Col. F. Kimble	Robbins	4/60	215	105	6			3	gsc	slope	D	
459	34°54'4[illegible]	82°23'45"	Dr. J.R. Thomason	do	1/52	116	8	6			8	bhgr		D	
460	34°54'3[illegible]	82°25'05"	David R. Lassiter	do	1957	102	55	6			60	gsc	slope	D	
461	34°54'1[illegible]	82°24'28"	M.R. Miller	do	4/51	110	37	6			20	gsc	slope	D	Pa
462	34°54'2[illegible]	82°23'10"	N. Hill	do	2/54	199	70	6	60	1954	5	gsc	slope	D	
463	34°55'0[illegible]	82°23'55"	R.H. Stewart	do	12/50	150		6			4	gsc	slope	D	
464	34°55'2[illegible]	82°23'45"		do	5/61	121	30	6			12	gsc	slope	D	Pa

Table 25 .ecord of Wells in Greenville County, South Carolina. (continued)

Well	Location		Owner	Driller	Date drilled	Depth (feet)		Diameter (inches)	Water level		Yield (gallons per minute)	Rock type	Topographic situation	Use	Remarks
	Latitude	Longitude				Total	Casing		Depth below land surface (feet)	Date					
465	34°54'40"	82°23'15"	Freeman Myrick	Robbins	10/53	88	49	6	40	1953	7-8	bhgn	slope	D	
466	34°55'10"	82°24'30"	Lehman Moseley	do	4/51	176	98	6			4	gsc	slope	D	
467	34°55'0"	82°24'20"	Miss V. Norris	do	9/58	215	57	6	57	1958		bhgn		D	
468	34°33'2"	82°22'35"	Guy Smith	--	1920	40		48			5	ms	flat	D	D, Pa
469	34°54'5"	82°23'35"	Mrs. McCauley	Robbins	11/56	128	42	6	50	1956	6	bhgn	slope	D	
470	34°54'30"	82°23'50"	Dr. J.W. McLean	do	1/58	114		6			10	bhgn	slope	D	
471	34°34'15"	82°22'55"	J.A. Hipps	Chandler	1961	36		24	15	1961	3	ms	slope	D	D, Pa
472	34°55'20"	82°24'15"	Earl W. Sargent	Robbins		150	40	6	97		10	gsc	slope	D	
473	34°55'05"	82°23'50"	Wade Stephens	do	9/59	160	58	6			8	gsc	slope	D	
474	34°39'05"	82°26'25"	H.W. Neely	do	1953	108	60	6			4	ms	flat	D	Pa
475	34°55'05"	82°23'55"	Dr. Hugh Smith	do	1/52	152	30	6			5	gsc	slope	D	
476	34°54'45"	82°23'25"	Dr. Cecil White	do	2/55	124	42	6			10	bhgn	slope	D	
477	34°55'05"	82°23'55"	Dr. Hugh Smith	do	3/53	117	55	6			6	gsc	slope	D	
478	34°55'10"	82°21'00"	Dr. Schultz	do	8/54	149	40	6			4	gsc	hill	D	
479	34°54'35"	82°24'25"	W.W. Stevenson	do	3/50	127	50	6			20	gsc	flat	D	Pa
480	34°57'50"	82°19'35"	J.W. Barnes	do	12/62	275	95	6	10	1962	15-20	bhgn	flat	D	Pa
481	34°54'50"	82°23'50"	H.R. Turner	do	6/55	309	30	6	75	1955	15	bhgn	slope	D	
482	34°55'25"	82°24'15"	Dr. B.D. White	do	8/59	180	60	6			12	gsc	slope	D	
483	34°54'45"	82°23'40"	Jack Ward	do	4/57	206	65	6	80	1957	3	bhgn	slope	D	
484	34°54'10"	82°23'30"	Roger Dillard	do	2/56	135	25	6	30	1956	2-3	gsc		D	
485	34°54'10"	82°23'30"	E.D. Willis	do	2/56	54	11	6			4	gsc		D	
486	34°39'45"	82°27'25"	G. Campbell	Harris	1954	130		6			15	ms	flat	D	Pa
487	34°54'25"	82°24'25"	Mr. White	Robbins	1/48	91	32	6	27	1948	6	gsc	slope	D	
488	34°55'45"	82°24'20"	WSPA-TV	do	2/47	178		6	80	1947	2	gsc	hill	C	Pa
489	34°53'15"	82°21'00"	George Smith	do	8/58	55	25	6	3	1958	30-40	gsc	draw	D	
490	34°54'30"	82°24'00"	Ansel Ashmore	do	1/49	103	30	6	35	1949	4	gsc	slope	D	
491	34°54'55"	82°23'30"	Morgan Goldsmith	do	12/48	138	48	6	40	1948	20	bhgn	slope	D	
492	34°57'25"	82°16'00"	Dennis Smith	do	1/64	75	45	6			5	gsc	flat	D	R
493	34°54'22"	82°24'28"	Jack W. Ray	do	1/48	118	22	6			10	gsc	slope	D	Pa
494	34°48'25"	82°28'15"	Lula Collins	do	1939	60		6				ggn	slope	D	Pa
495	34°54'22"	82°24'30"	Andrew McNeil	do	5/53	96	20	6			15	gsc	slope	D	
496	34°53'35"	82°23'20"	Jim Pressley	do	12/52	229	30	6			5	gsc	hill	D	
497	34°54'00"	82°23'15"	Ernest K. Young	do	12/60	220	80	6				gsc	slope	D	

	34° [illegible]	[illegible] 30"	[illegible] W					20					gsc	[illegible]		
496	34°53'35"	82°23'20"	Jim Pressley	do	[illegible]	229	30	6			5	gsc	hill	D		
497	34°51'00"	82°23'15"	Ernest K. Young	do	12/60	220	80	6				gsc	slope	D		

Table 25 Record of Wells in Greenville County, South Carolina (continued).

Well	Location		Owner	Driller	Date drilled	Depth (feet)		Diameter (inches)	Water level		Yield (gallons per minute)	Rock type	Topographic situation	Use	Remarks
	Latitude	Longitude				Total	Casing		Depth below land surface (feet)	Date					
498	34°48'20"	82°28'20"	Luta Collins	----	1931	45		48				ggn	slope	D	Pa
499	34°54'10"	82°23'15"	Miss Coggins	Robbins	8/59	118	64	6			30	gsc	slope	D	
500	34°50'15"	82°17'30"	Ernest Wilson	do	11/61	105	55	6			35-40	ggn	slope	D	
501	34°50'15"	82°17'55"	Fletcher Kirkland	do		110	60	6				gsc	slope	D	
502	35°01'10"	82°31'45"	Walter Goldsmith	do	5/57	134	80	6	50	1957	7	mggn	valley	D	
503	35°01'25"	82°31'45"	do	do	6/60	176	12	6			5	ms	hill	D	
504	35°02'05"	82°27'35"	C. Douglas Wilson	do	8/53	163	133	6			12-15	bgn	flat	D-S	
505	35°05'10"	82°28'05"	Howard Wilkie	do	10/57	45		24				mggn	flat	D	B
506	35°02'00"	82°28'45"	Guy Poore	do	12/55	193	154	6			5	bgn	flat	D	
507	35°05'10"	82°28'10"	Bruce Nense	do	11/57	148	133	6	35	1957	6	mggn	flat	D	Pa
508	34°59'10"	82°31'50"	Mrs. J.A. Lunsford	do	3/53	35		6				bgn	flat	D	
509	35°00'05"	82°31'20"	T.J. Robinson	do	8/59	118	80	6			4	bgn	slope	D	Pa
510	35°02'15"	82°29'05"	J.W. Johnson	do	7/48	56	48	6	28	1948	9	bgn	slope	D	
511	34°49'15"	82°28'45"	Juvenile detention home	Harris	1955	583	6	6				ggn	hill	P	abd
512	34°37'10"	82°14'25"	W.S. Paden	Wasson	1960	80		6				gr	flat	D	Pa
513	34°53'10"	82°20'55"	F.M. Whitlock	Robbins	3/51	105	80	6			4-5	gsc	flat	D	
514	34°37'15"	82°15'10"	J.C. Sprouse	Burdette	1954	93	32	6			35	gr	flat	D	Pa
515	34°39'10"	82°20'10"	Oaklawn Prison Camp	Robbins	1954	120		6	30	1954	7	ms	hill	P	abd
516	34°39'30"	82°20'10"	do	Cox	1955	339		6			8	ms	hill	P	Pa
517	34°39'30"	82°20'10"	do	do	1958	500		6			10	ms	hill	P	Pa
518	34°40'35"	82°19'05"	C. Kellett	do	1952	241	66	6	35	1952	22	ms	flat	D	Pa
519	34°49'55"	82°20'05"	J.F. Schottas	Robbins	8/50	152	64	6	19	1950	20	ms	slope	D	
520	34°40'15"	82°19'00"	J.P. Kellett	Kellett	12/62	53		24			5	ms	flat	D	B, Pa
521	34°50'10"	82°18'00"	Doug Green	Robbins	10/55	164	78	6			4	ggn	flat	D	Serves 8 houses
522	34°[illegible]'25"	82°20'25"	Clay Jones	do	1/52	188	50	6			50-60	ms	slope	S	Chicken farm
523	34°19'50"	82°18'15"		do	9/51	60	53	6	21	1951	15	ggn	flat	D	
524	34°49'50"	82°20'00"	E.M. Rammingor	do	2/47	138	50	6	20	1947	15	ms	slope	D	
525	34°44'05"	82°26'50"	P.W. Kellett	do	12/56	129	80	6			8	ggn	flat	D	
526	34°42'15"	82°18'05"	Mr. Riggins	Freshwater	1961	123		6			15	ms	slope	D	Pa

Table 25. Record of Wells in Greenville County, South Carolina (continued).

Well	Location		Owner	Driller	Date drilled	Depth (feet)		Diameter (inches)	Water level		Yield (gallons per minute)	Rock type	Topographic situation	Use	Remarks
	Latitude	Longitude				Total	Casing		Depth below land surface (feet)	Date					
527	34°44'25"	82°27'05"	D. Pittman	Robbins	9/56	79	28	6			10	ggn	hill	D	
528	34°43'45"	82°27'35"	Marion White	do	6/58	116	70	6				ggn	slope	D	
529	34°43'55"	82°26'55"	Edward A. Jeckel	do	12/55	97	72	6			10	ggn	flat	D	
530	34°46'00"	82°20'55"	W.C. Hendrix, Jr.	do	5/50	111	60	6			6-7	ms	slope	D	
531	34°45'50"	82°21'15"	J.T. Hellams	do	8/60	95		6			5	ms	slope	D	
532	34°45'50"	82°21'15"	do	do	3/57	125	60	6			20	ms	slope	D	des
533	34°39'45"	82°14'00"	H.L. Farrow	--	1941	90	60	6				gr	flat	D	Pa
534	34°46'00	82°20'50"	Mr. Oxner	Robbins	6/59	56	40	6			18	ms	slope	D	
535	34°46'20"	82°20'30"	J.B. Bishop	do	10/59	112	60	6			20	ms	slope	D	
536	34°46'25	82°20'30"	Ed Smith	do	11/58	90	36	6			20	ms	slope	D	
537	34°46'05	82°20'10"	C.M. Turner, Jr.	do	7/59	178	80	6			2	ggn	draw	D	
538	34°46'00	82°20'55"	Mr. Taylor	do	7/56	109	30	6			10	ms	slope	D	
539	34°43'45	82°23'40"	Bill Stroud	do	9/59	80	30	6			25	ggn	slope	D	Pa
540	34°50'45"	82°19'35"	Jack Sloan	do	4/52	89	45	6	12	1952	50	ms	flat	D	
541	34°51'00"	82°19'30"	W.W. Pate	do	1/52	127	74	6			25	ggn	flat	S	
542	34°51'25"	82°20'25"	James A. Longo	do	5/51	135	47	6			4	ggn	draw	D	Pa
543	34°50'30"	82°20'40"	Goldsmith & Gimmons Trucking terminal	do	1/53	150	22	6			15	ms	flat	C	
544	34°50'30	82°20'40"	do	do	4/52	101	40	6			25	ms	flat	C	
545	34°54'20	82°19'40"	Veeder Root	do	1951	158	92	6	12	1951	5	gsc	flat	I	abd
546	34°50'40	82°19'10"	Dr. Bolt	do	8/48	102	60	6	21	1948	30	ggn	flat	D	Pa
547	34°44'10	82°23'30"	Skyland Drive-in; Shady Lane Trailer Park & Gas Station	do	1/62	180	38	6			25	ggn	draw	C	
548	34°43'45"	82°23'25"	James Sorrell	do	12/56	44	34	6	20	1956	10	ggn	flat	C	Trailer Ct.
549	34°44'20"	82°23'25"	F.S. Zahka	do	9/53	103	82	6			7	ggn	hill	C	Gardenia Motel
550	34°43'40	82°23'20"	J.G. Ridgewny	do	8/51	90	80	6			20	ggn	flat	D	
551	34°45'25"	82°09'55"	Harold Cooper	Durdette	1963	315	56	6			30	ggn	draw	I	Pa
552	34°44'50"	82°23'40"	Mr. McDanial	Robbins	11/52	65	59	6			20	ggn	slope	D	
553	34°45'00"	82°23'35"	Landrum's Upholstery	do	10/48	140	60	6	27	1948	26	ggn	hill	C	

549	34°[illegible]	82°[illegible]	[illegible]		[illegible]	[illegible]		6				[illegible]				Mo...
550	34°4[illegible]'40"	82°23'20"	J.G. Ridgeway	do		90	80	6			20	ggn	flat	D		
551	34°4[illegible]'25"	82°09'55"	Harold Cooper	Burdette	1963	315	56	6			30	ggn	draw	I	Pa	
552	34°4[illegible]'50"	82°23'40"	Mr. McDaniel	Robbins	11/52	65	59	6			20	ggn	slope	D		
553	34°4[illegible]'00"	82°23'35"	Landrum's Upholstery	do	10/48	140	60	6	27	1948	26	ggn	hill	C		

Table 25 Record of Wells in Greenville County, South Carolina (continued)

Well	Location		Owner	Driller	Date drilled	Depth (feet)		Diameter (inches)	Water level		Yield (gallons per minute)	Rock type	Topographic situation	Use	Remarks
	Latitude	Longitude				Total	Casing		Depth below land surface (feet)	Date					
554	34°39'45"	82°23'15"	Sanoma Elementary School	Robbins	8/52	170	75	6	15	1952	40	ggn	flat	P	
555	34°41'15"	82°24'00"	Mrs. Kilpatrick	do	1/57	125	65	6			5	ggn	flat	D	Pa
556	34°44'10"	82°23'30"	Skyland Drive-in; Shady Lane Trailer Park & Gas Station	do	8/50	83	58	6			7-8	ggn	hill	C	
557	34°42'05"	82°22'35"	Mr. Blakely	do	2/45	153	17	6	26.84	10/62		ggn	flat	D	abd
558	34°36'30"	82°22'05"	Mr. McKelvey	do	1/45	118	90	6	6	1945	25	ggn	flat	D	Pa
559	34°34'40"	82°19'15"	Mr. Christerfer	do	4/48	29	22	6	17.39	10/62	10	gr	slope	D	
560	34°59'00"	82°20'40"	T.T. Dill	Harris	6/55	370	51	6	49	1955	9	bhgn	flat	D	Pa
561	34°56'20"	82°15'55"	Mack Sherman	Robbins	10/60	109	75	6			12	gsc	slope	D	abd
562	34°56'30"	82°24'35"	A.T. & T.	do	1963	475	20	6	275	1963	1	gsc	hill	I	R, Pa
563	34°56'45"	82°19'15"	W. Homer Langley	do	6/53	100	35	6	17	1953	25-30	gsc	slope	D	
564	34°56'05"	82°21'15"	Mrs. Harrington	do	9/56	162	75	6			4	gsc	slope	D	
565	34°49'00"	82°27'05"	Herman Smith	do	12/56	212	32	6	75	1956		ggn	hill	D	
566	34°48'00"	82°24'05"	Martha Harrison	do	3/50	70	30	6			.	ms	slope	D	Pa
567	34°49'00"	82°27'10"	Dewey Gilreath	do	4/53	191	22	6	72	1953		ggn	slope	D	
568	35°03'05"	82°27'50"	Mr. Stocksbury	do	11/63	125	41	5			5	mggn	slope	D	R
569	35°02'00"	82°25'30"	Troy Stiles	do	4/58	185	118	6			4	bgn	slope	D	
570	35°01'35"	82°25'20"	Spear's Chicken Farm	do	6/51	145	110	6			5	bgn	slope	D	
571	34°55'15"	82°25'50"	Calvin Gentry	do	11/55	154	100	6	30	1955	3	gsc	flat	D	
572	34°55'10"	82°25'30"	Mr. Hudson	do	10/63	135	35	5			3	gsc	flat	D	R
573	34°55'10"	82°15'25"	Charles Ross	Brockman	1962	112	50	6	40	1962	15	gsc	hill	D	Pa
574	34°53'10"	82°20'15"	J.D. Vickery	Robbins	4/53	174	103	6	20	1953	15	gsc	flat	D	
575	35°07'15"	82°32'05"	Mr. Friddle	do	7/56	155		6			15	mggn	valley	D	
576	34°47'45"	82°21'20"	A.E. Johnston, Jr.	do	10/48	87	50	6	30	1948	6	ms	slope	D	
577	34°45'05"	82°17'20"	Harry Garraux	do	9/61	113	73	6			10	ms	flat	D	
578	34°59'05"	82°14'00"	Louis Smith	Sloan	5/62	318	25	6	60	1962	4	mggn	hill	D	Pa
579	34°50'30"	82°17'55"	Caldwell Harper	Robbins	8/54	120	35	6				ggn	slope	D	
580	34°46'15"	82°21'55"	R.L. Greenman	do	1/53	42	17	6	15	1953	5	ggn	hill	D	
581	34°45'05"	82°23'25"	Miller Mobile Home Trailer Court	do	6/60	235	72	6	20	1960	15	ggn	flat	C	Pa

Table 25. Record of Wells in Greenville County, South Carolina (continued).

Well	Location		Owner	Driller	Date drilled	Depth (feet)		Diameter (inches)	Water level		Yield (gallons per minute)	Rock type	Topographic situation	Use	Remarks
	Latitude	Longitude				Total	Casing		Depth below land surface (feet)	Date					
582	34°45'05"	82°23'25"	Miller Mobile Home Trailer Court	Robbins	10/58	210	85	6			8	ggn	flat	C	
583	34°51'45"	82°29'10"	H.E. Runge	do	5/50	116	50	6			25	gsc	slope	D	
584	34°51'50"	82°28'50"	E.W. Montgomery	do	5/50	144	45	6			10	gsc	hill	D	
585	34°53'05"	82°29'10"	Henry Theodore	do	1/47	182	60	6	40	1947	15	gsc	slope	D	
586	34°51'40"	82°27'15"	Ed Means, Jr.	do	11/52	146	38	6			25-30	gsc	hill	D	
587	34°53'35"	82°20'35"		do	6/51	109	57	6			15-20	gsc	flat	D	
588	34°53'20	82°21'00"	Furman Norris, Jr	do	5/51	157	55	6			25	gsc	slope	D	
589	35°00'25	82°16'15"	Tom Beacham	Willis	1958	45		24				mggn	slope	D	B, Pa
590	34°53'10	82°21'15"	Mr. Gregory	Robbins	1954	102	46	6			25	gsc	slope	D	abd
591	34°53'20	82°20'45"	R.H. Grant	do	5/50	94	55	6			15-20	gsc	flat	D	abd
592	34°53'20	82°20'45"	Mr. Cannon	do	5/50	50	48	6			10	gsc	flat	D	abd
593	34°35'20"	82°23'50"	Mrs. Essie Weeks	do	11/54	130	98	6			5	ggn	flat	D	Pa
594	34°44'15"	82°20'50"	Oak Grove Trailer Court	do	8/59	204	115	6			20	ms	draw	C	
595	34°37'30	82°23'25"	Surll Co.	do	6/60	250		6			15	ggn	flat	I	
596	34°37'30"	82°23'25"	do	do	6/60	200		6			30	ggn	flat	I	
597	34°37'35"	82°23'25"	Mr. Spillers	do	7/50	93	56	6	6	1950	20	ggn	flat	D-C	
598	34°37'35"	82°17'00"	Pisgah Methodist Church & house	do	9/61	76		6			10	gr	slope	D-C	Pa
599	34°43'20"	82°21'20"	Frederick F. Carr	do	8/61	320	20	6			7	ggn	slope	D	
600	34°44'20"	82°20'15"	E.B. Hendricks	do	11/60	101		6	33.30	11/62	4	ggn	flat	D	
601	34°37'10"	82°18'50"	Fork Shoals Sch.	do	1/47	52	26	6	30	1947	12	gr	slope	P	
602	34°42'50"	82°27'10"	Ham Smith	do	8/54	115	42	6			20	ggn	flat	D	
603	34°43'15"	82°27'10"	David Lawless	do	4/56	131	53	6			4	ggn	slope	D	
604	34°59'10	82°18'50"	John Holmes	do	1948	200		6	79.95	1/63	4	bhgn	hill	D	
605	35°04'25	82°18'30"	Theron Few	--	1963	507		6	30	1963		mggn	slope	D	Pa
606	34°30'05"	82°17'30"	Aldon Babb	Robbins	4/48	133	70	6	25	1948	6	gr	flat	D	
607	34°49'00	82°28'05"	C.H. Harbin	do	6/59	155	39	6	68	1959	1-2	ggn	slope	D	
608	34°48'50"	82°28'35"	Norman Long	do	2/53	95	60	6				ggn	slope	D	
609	34°50'50"	82°27'15"	Standard Supply	do	12/58	163	106	6	25	1958	30	gsc	slope	C-D	
610	34°50'05"	82°28'40"	Frank Taffer	do	4/60	180	60	6			5	ggn	slope	D	
611	34°50'05"	82°28'55"	Stafford Sign Co.	do	5/61	168		6			3-4	ggn	hill	C	

607	[illegible]	[illegible]	[illegible]	do	6/[illegible]	[illegible]	[illegible]	6	[illegible]	[illegible]	[illegible]	[illegible]	s. [illegible]	D		
608	34°48'	82°20'	Nor[illegible]ong	[illegible]	2/[illegible]	[illegible]95	[illegible]	6								
609	34°50'50"	82°27'15"	Standard Supply	do	12/58	[illegible]3	106	6	25	1958	30	gsc	slope	C-D		
610	34°50'05"	82°28'40"	Frank Taffer	do	4/60	180	60	6			5	ggn	slope	D		
611	34°50'05"	82°28'55"	Stafford Sign Co.	do	5/61	168		6			3-4	ggn	hill	C		

Table 25. Record of Wells in Greenville County, South Carolina (continued)

Well	Location		Owner	Driller	Date drilled	Depth (feet)		Diameter (inches)	Water level		Yield (gallons per minute)	Rock type	Topographic situation	Use	Remarks
	Latitude	Longitude				Total	Casing		Depth below land surface (feet)	Date					
612	35°07'25"	82°18'40"	G.W. Pittman	--	1930	44		48			5	mggn	slope	D	D, Pa
613	34°50'00"	82°29'00"	Rochester, Liberty Nursery	Robbins	9/53	65	60	6			8	ggn	valley	Ir	
614	35°07'30"	82°32'20"	Harold Greer	do	9/56	143	94	6			15	mggn	valley	D	
615	34°50'30"	82°28'05"	Bob Owens	do	1959	125	75	6	46	1959	20	gsc	slope	D	
616	35°05'45"	82°17'45"	M.L. Crain	Shuttles	1950	165	50	6	20	1950		mggn	flat	D	Pa
617	34°50'05"	82°29'10"	Tootsie Lanford	Robbins	6/59	78		6			6	ggn	valley	D	
618	34°50'30"	82°28'20"	Robert Martin	do	12/50	150	59	6			25	gsc	slope	D	Graymont Farms
619	35°05'45"	82°17'55"	M.L. Crain	--		55		48				mggn	flat	D	D, Pa
620	34°49'00"	82°20'40"	J.H. Phillips	Robbins	3/50	52		6			8	ms	flat	D	
621	34°48'30"	82°20'15"	Jimmie Bannon	do	1/47	125	43	6			10	ms	slope	S	abd
622	34°48'30"	82°20'15"	do	do	1/47	123	43	6	15	1947	10	ms	hill	D	abd
623	34°49'30"	82°20'45"	Mr. Wilson	do	6/49	68	22	6	15	1949	35	ms	flat	D	
624	34°49'40"	82°19'45"	Mrs. Abercrombie	do	12/47	87	80	6	30	1947	5	ms	slope	D	abd
625	34°56'10"	82°21'15"	Mrs. B.A. Griswold	do	1/48	117	98	6	35	1948	8	gsc	flat	D	
626	34°49'30"	82°27'10"	E.F. Palmer	do		115	45	6			10	ggn	flat	D	abd
627	35°02'05"	82°16'00"	Bobby Mason	do	3/48	90	60	6	45	1948	7	mggn	draw	D	
628	34°51'00"	82°20'20"	Tom Graham	do	5/50	140		6			40-50	ggn	slope	D	
629	34°41'25"	82°21'55"	Mrs. L. Garrison	do	9/60	86		6			25	ggn	flat	D	
630	34°50'50"	82°16'25"	Ralph Garlington	do	8/61	135	102	6			25	gsc	slope	D	
631	34°54'10"	82°13'50"	R.L. Smith	Chandler	1958	47		24				ggn	flat	D	B, Pa
632	34°43'40"	82°24'20"	Alvin Gilreath	Robbins	6/54	91	88	6	flows		25-30	ggn	draw	D	Ca
633	35°07'15"	82°14'05"	Clifford Pace	Hamilton	1963	95	56	6	60	1963	10	mggn	slope	D	Pa
634	35°10'15"	82°17'25"	WSPA-TV	Southeastern Co.	1962	300		6			dry	ms	hill	C	
635	34°55'40"	82°21'40"	Chas. Hawkins	Robbins	6/61	146	54	6			12	gsc	hill	D	
636	34°51'55"	82°14'40"	Paul Harrington	do	5/61	158	51	6			2-4	ggn	slope	D	Pa
637	35°10'15"	82°17'25"	WSPA-TV	Southeastern Co.	1962	320		6			dry	ms	hill	C	
638	34°54'35"	82°24'20"	A.M. Gerrald	Robbins	9/54	113	40	6			4-5	gsc	flat	D	
639	34°47'50"	82°19'20"	T.A. Sizemore	do	3/50	130	60	6	15.7	7/62		ms	draw	D	abd
640	34°47'55"	82°19'10"	Mr. Hingson	do	4/51	50	40	6			20	ms	slope	D	

Table 25. Record of Wells in Greenville County, South Carolina (continued).

Well	Location: Latitude	Location: Longitude	Owner	Driller	Date drilled	Depth (feet): Total	Depth (feet): Casing	Diameter (inches)	Water level: Depth below land surface (feet)	Water level: Date	Yield (gallons per minute)	Rock type	Topographic situation	Use	Remarks
641	34°46'45"	82°25'45"	The Fireside Club	Robbins	4/50	75	62	6			7	ggn	flat	C	Pa
642	34°52'55"	82°21'15"	Catalina Motel	do	4/50	152	40	6			60	gsc	draw	C	dus
643	34°52'00"	82°20'15"	Miss Mary Harbin	do	5/60	60	41	6			20-25	ggn	slope	D	
644	34°42'25"	82°19'55"	Thomas C. James	do	1/54	140	72	6	25-30	1954		ggn	flat	D-C	Shop & 2 houses; Pa
645	34°42'30"	82°20'00"	Estate of J.C. James	do	11/54	150	98	6			10-12	ggn	flat	D-C	Trailer Ct & 4 houses
646	34°59'55"	82°18'50"	C.A. Howell	do	8/53	101	51	6			1	bgn	flat	D	Pa
647	34°54'50"	82°17'20"	Dero Jackson	do	4/61	144	40	6			12	gsc	slope	D	Pa
648	35°00'05"	82°20'30"	J.S. Joines	do	10/61	119	50	6			3	bhgn	draw	D	
649	34°51'45"	82°20'35"	Tom Inglesby	do	4/53	216	75	6	70	1953	25	ggn	slope	D	
650	34°48'50"	82°27'10"	M.L. Kelley	do	3/60	80	30	6			5-6	ggn	slope	D	
651	34°47'50"	82°19'55"	Laurel Creek Sch.	do	2/60	150	68	6			4	ms	slope	P	
652	34°57'05"	82°18'30"	J.H. Lyle	do	8/56	88	60	6			10	gsc	slope	D	Pa
653	34°51'40"	82°27'45"	Mr. Lloyd	do	3/53	102	60	6			12-15	gsc	flat	D	Abd
654	34°51'40"	82°27'15"	do	do	3/53	101	25	6			5	gsc	flat	D	
655	34°44'45"	82°20'05"	J.C. Leatherwood	do	11/56	55		6			7-8	ggn	hill	D	Pa
656	34°48'20"	82°28'00"	R.J. Littlejohn	do		220	70	6			10	ggn	hill	D	Pa
657	34°56'55"	82°30'20"	Preston Lipscom	do	10/58	125	15	6			3	bgn	hill	D	Dry in summer
658	34°48'10"	82°26'00"	White Horse Mill	do	4/50	310	17	6			dry	ggn	slope	I	dus
659	34°54'45"	82°26'35"	George Lathern	do	7/56	108	30	6			5	gsc	flat	D	Pa
660	34°47'50"	82°26'35"	Mr. Lunsford	do	6/61	50	25	6			12	ggn	slope	D	
661	34°43'50"	82°17'00"	Mrs. JoAnn Martin	do	7/60	102		6			25-30	ms	flat	D	
662	34°48'10"	82°26'00"	White Horse Mill	do	4/50	295	46	6			45	ggn	slope	I	
663	34°51'00"	82°19'40"	Melva Morris	do	6/55	86	28	6			20	ggn	flat	D	
664	34°46'45"	82°25'30"	William Maxwell	do	1/61	91	50	6			15	ggn	slope	D	
665	34°50'15"	82°23'35"	J.B. Orders	do	9/52	75	43	6			15	ggn	slope	D	
666	34°48'00"	82°28'10"	R.L. McSweeney	do	7/59	98	29	6			10	ggn	valley	D	Pa
667	34°52'50"	82°27'05"	W.H. McCrary	do	8/51	116	90	6			25-30	ggn	slope	D-C	abd
668	34°55'15"	82°17'50"	Mr. McDaniel	do	11/53	107	30	6	38	1953	7-8	gsc	hill	D	
669	34°48'25"	82°27'25"	J.C. Phillips	do	10/55	255	30	6			50	ggn	slope	D	Pa
670	34°54'55"	82°24'45"	J.D. Parks	do	12/57	193	80	6	22	1957	5	gsc	slope	D	

Table 25. Record of Wells in Greenville County, South Carolina (continued).

Well	Location		Owner	Driller	Date drilled	Depth (feet)		Diameter (inches)	Water level		Yield (gallons per minute)	Rock type	Topographic situation	Use	Remarks
	Latitude	Longitude				Total	Casing		Depth below land surface (feet)	Date					
671	34°55'05"	82°24'25"	Mrs. Dit Poe	Robbins	1/59	110	67	6	50	1959		gsc	slope	D	
672	35°08'50"	82°15'05"	Mr. Frohlick	--	2/58	165		6			30	mggn	draw	D	Pa
673	34°50'45"	82°19'50"	Mrs. Alma Peurce	Robbins	11/60	185	53	6			50	ms	flat	D	
674	34°46'00"	82°23'40"	John H. Peden	do	8/56	60	44	6			25	ggn	valley	D	
675	34°55'20"	82°21'15"	Ned T. Dobson	do	6/61	200	64	6			3	gsc	slope	D	Pa
676	34°55'10"	82°18'40"	N.E. Reese	do	5/50	83	75	6	39.62	7/62		gsc	hill	D	abd
677	34°54'55"	82°25'50"	Jack Robbins	do	5/57	40	10	6	10	1957	8	gsc	slope	D	
678	34°47'55"	82°17'40"	Mrs. Leach	do	2/64	125	90	6			4	ms	hill	D	R
679	34°58'20"	82°23'55"	Joe Robbins	do	7/61	125	37	6			1	bhgn	hill	D	Pa
680	34°50'50"	82°16'20"	Dick Rountree	do	9/61	130	42	6			6	gsc	slope	D	
681	34°53'30"	82°29'40"	Jack Gurdo	do		105	58	6			15	gsc	hill	D	
682	34°38'20"	82°14'45"	L.W. Barron	do	12/63	200	46	6			12	gr	slope	D	
683	34°55'30"	82°20'40"	Bill Smith	do	8/59	130	80	6			3-4	gsc	hill	D	
686	34°34'35"	82°15'20"	Mr. Richie	do	9/57	132	72	6			3	gr	slope	D	
687	34°53'50"	82°23'05"	Col. Singleton	do	5/52	141	84	6	71	1952	7	gsc	hill	D	
688	34°51'05"	82°18'05"	Carlos R. Smart	do	7/61	113	64	6				gsc	hill	D	
690	34°37'00"	82°16'30"	Mrs. John Terry	do	5/59	118	30	6			4	gr	flat	D	
691	34°54'10"	82°24'20"	E.D. Trammell	do	12/58	110	50	6	30	1958	20	gsc	hill	D	Pa
692	34°51'40"	82°28'55"	Mr. Taylor	do	7/51	101	35	6			15	gsc	valley	D	
693	34°48'15"	82°26'55"	H.L. Threatt	do	10/55	111	47	6			7-8	ggn	hill	D	
694	34°56'25"	82°31'20"	James Zupan	do	3/55	96	60	6			7	bgn	valley	D	Pa
695	34°50'50"	82°27'05"	Wrenn Syracuse Store	do	2/54	113	52	6			15-20	gsc	slope	C	
696	34°52'00"	82°19'30"	George Malinoff	do	5/59	118	70	6			8-10	ggn	slope	D	
697	34°50'30"	82°19'05"	Jack Galloway	do	2/51	59	30	6				ggn	flat	D	
698	34°30'25"	82°17'50"	Allen D. Southern	do	12/62	200	35	6	30	1962	3	gr	flat	D	Pa
699	34°30'25"	82°18'05"	Theron E. Woods	do	12/62	60	40	6	10.68	12/62	5	gr	slope	D	Pa
700	34°44'40"	82°19'30"	Ramsgate Club	do	3/64	120	45	6			8	ggn	slope	C	R
701	34°44'40"	82°19'35	do	do	3/64	200	38	6			15	ggn	draw	C	R

Table 25. Record of Wells in Greenville County, South Carolina (continued).

EXPLANATION

USE:

P	= Public Supply	(municipal water systems, schools, colleges, etc.)
D	= Domestic Supply	(residential use only)
C	= Commercial Supply	(churches, motels, restaurants, filling stations, stores, and other small business establishments)
I	= Industrial Supply	(used in manufacturing or production processes)
S	= Stock Supply	(live stock and poultry)
Ir	= Irrigation Supply	(nurseries, etc.)

REMARKS:

D = Dug well
B = Bored well
R = Rock sample
Ca = Complete chemical analysis
Pa = Partial chemical analysis
abd = Abandoned well
des = destroyed well

[illegible]

48E--k25	GRV-2463 Cone Mills	MW-54	S of Travelers Rest																				
	Bentonite pellets from 18.5' to 20.5'																						
49E--k26	GRV-2464 Cone Mills	P-1	S of Travelers Rest																				
	Bentonite pellets from 1.5' to 3.5'																						
48E--k27	GRV-2465 Cone Mills	EXT-1	S of Travelers Rest																				
	Bentonite pellets from 32.0' to 39.0'																						
48E--[illegible]	~~GRV-0932 J. [illegible]~~		NW of Greenville																				
48E--n02	~~GRV-0642 W. M. McCrary~~		NW of Greenville																				
48E--n01	~~GRV-0939 J. H. Smith~~		W of Greenville																				
48E--n02	GRV-0419 Mrs. Mae Williams		NW of Greenville																				
48E--n03	~~GRV-0100 WYRL Radio Station~~		NW of Greenville																				
48E--p01	PES-~~0037~~ Elliot Salson		Saluda Lake																				
	is																						
48E--p02	PES-0038 John Salson		Saluda Lake																				
	is																						
48E--p03	PES-0040 Kenneth Freeman		Saluda Lake																				
	is																						
48E--p01	PES-0121 Louis Maclaurin		on Saluda River																				
	is																						
48E--p02	~~PES-0120 Bill Gallentine~~		nr. dam on Saluda R																				
	is																						
48E--p03	PES-0121 Dr. Robinson		Saluda Lake																				
	is																						
48E--p04	~~GRV-0533 W. E. Dunn~~		W of Greenville																				
48E--n01	~~GRV-0521 E. W. Montgomery~~		W of Greenville																				
48E--n02	~~GRV-0532 W. [illegible] Taylor~~		W of Greenville																				
48E--n11	~~GRV-1396 Sidney & Lisa Gross~~		W of Greenville																				
	1.5 gpm @ 160''																						
48E--n01	~~GRV-0409 T. W. Tatum~~		W of Greenville																				
48E--n02	~~GRV-0410 Dr. Lloyd, Jr~~		W of Greenville																				
48E--n03	~~GRV-0535 Ed Mason, Jr.~~		W of Greenville																				
48E--n04	~~GRV-0151 [illegible]~~		W of Greenville																				
48E--n05	~~GRV-0561 [illegible] Lloyd~~		W of Greenville																				
48E--n11	GRV-0210 Jasmatta Cutter		W of Greenville																				
	1.5 gpm @ 120''																						
48E--s01	~~GRV-0057 Southern Weaving~~		Greenville																				
48E--s02	~~GRV-0058 Southern Weaving~~		Greenville																				
48E--s03	~~GRV-[illegible] Southern Weaving~~		Greenville																				
	~~[illegible]~~																						
48E--s01	~~GRV-0010 Duke Power Co.~~		Greenville																				
48E--s02	~~GRV-0055 Riverdale Mills~~		Greenville																				
48E--s03	~~GRV-0056 Riverdale Mills~~		Greenville																				
48E--s04	~~GRV-0711 Parker H.S. School~~		Greenville																				
48E--[illegible]	~~GRV-[illegible] Parker H.S. School~~		Greenville																				

delinquent or abandoned

	345299 822599	-1.00	03 AH	Groundwater Prot.Inc	-1				PV														
Paris Mountain	040			05/15/1990																			
	345299 822599	-1.00	03 AH	Groundwater Prot.Inc	12	2	1	-1		3.50	05/16/1990	P											
Paris Mountain	040			05/16/1990	-1				PV														
	345299 822599	-1.00	03 AH	Groundwater Prot.Inc	16	41	2	-1		-1.00	/ /	P											
Paris Mountain	040			05/18/1990	-1				PV														
HSED	345240 822715	-1.00	00 0	Harris	113	30	6	5		-1.00	/ /											C/sp	
Greenville	061			/ /	-1																		
HSID	345250 822705	-1.00	43 0	Robbins	116	30	6	25		-1.00	/ /											C/sp	
Greenville	061			08/01/1951	-1																		
	345245 822915	-1.00	00 0	Harris	126	15	6	7		-1.00	/ /											C/sp	
Paris Mountain	040			/ /	-1																		
FLAT	345210 822800	-1.00	43 0	Robbins	113	13	5	1		-1.00	/ /											C/sp	
Greenville	061			02/01/1952	-1																		
FLAT	345205 822805	-1.00	43 0	Robbins	102	15	6	8		-1.00	/ /											C/sp	
Greenville	061			11/01/1958	-1																		
	345215 822945	-1.00	00 0	Robbins	254	70	6	19		-1.00	/ /											IS	
Greenville	061			/ /	-1																		
	345230 822920	-1.00	00 0	Robbins	155	30	6	15		-1.00	/ /											IS	
Greenville	061			/ /	-1																		
	345230 822930	-1.00	00	Robbins	99	-1	6	2		-1.00	/ /											IS	
Greenville	061			/ /	-1																		
	345130 822929	-1.00	00 0	Robbins	129	45	6	10		35.00	/ /											IS	
Greenville	061			/ /	-1																		
	345130 822920	-1.00	00 0	Robbins	127	55	6	8		-1.00	/ /											IS	
Greenville	061			/ /	-1																		
	345120 822915	-1.00	00 0	Robbins	127	30	6	10		-1.00	/ /											IS	
Greenville	061			/ /	-1																		
HSID	345145 822910	-1.00	00 0	Robbins	116	50	6	25		-1.00	/ /											C/bs/Oil	
Greenville	061			05/01/1950	-1																		
HTOP	345150 822850	-1.00	00 0	Robbins	144	45	6	10		-1.00	/ /											C/bs/Oil	
Greenville	061			05/01/1950	-1																		
VALL	345140 822855	-1.00	00 0	Robbins	101	35	5	15		-1.00	/ /											C/bs/Oil	
Greenville	061			07/01/1951	-1																		
	345199 822899	-1.00	00 0A	Tollett	182	35	6	3		20.00	07/12/1992	P											
Greenville	061			07/12/1992	-1				PV														
FLAT	345140 822745	-1.00	48 0	Robbins	116	-1	6	1		-1.00	/ /											C/sp	
Greenville	061			[illegible]	-1																		
FLAT	345145 822745	-1.00	43 0	Robbins	127	22	6	5		11.68	[illegible]											C/sp	
Greenville	061			[illegible]	-1																		
HTOP	[illegible]	[illegible]	[illegible]	[illegible]	135	18	6	12		1.00	/ /											C/sp	
Greenville	061			[illegible]	-1																		
FLAT	345140 822745	-1.00	48 0	Robbins	102	-1	6	12		-1.00	/ /											C/sp	
Greenville	061			[illegible]	-1																		
FLAT	345140 822745	-1.00	00 0	Robbins	101	25	6	5		-1.00	/ /											C/sp	
Greenville	061			02/01/1952	-1																		
	345199 822799	-1.00	00 0A	Hughes	655	17	6	9		10.00	[illegible]	P											
Greenville	061			08/02/1998	-1				PV														
DRAW	345125 822600	-1.00	00 0	Robbins	217	35	6	35		8.00	/ /											C/sp	
Greenville	061			/ /	-1																		
DRAW	345125 822600	-1.00	35 0	Robbins	225	-1	6	32		11.00	/ /											C/sp	
Greenville	061			/ /	-1																		
	345130 822610	-1.00	IN		227	-1	-1	125		-1.00	/ /											C/sp	
Greenville	061			/ /	-1																		
FLAT	345140 822600	-1.00	25 0	[illegible]	222	7	6	70		25.00	/ /											Pipe	
Greenville	061			/ /	[illegible]	[illegible]	[illegible]	[illegible]		[illegible]	/ /											Pipe	
HSED	345155 822530	-1.00	35 0	[illegible]	-1																		
Greenville	061			/ /	200	1	6	70		-1.00	/ /											Pipe	
FLAT	345135 822525	-1.00	35 0	Robbins	-1																		
Greenville	061			/ /	207	15	6	20		3.00	[illegible]											C/sp	
Greenville	061			[illegible]	[illegible]	[illegible]	[illegible]	[illegible]		[illegible]	[illegible]											[illegible]	

48E--y05 GRV-0201 Jackson Field	Greenville	Greenville	HSID	345030	022940	-1.00	00 0	Robbins	200	40	6	25		20 00	05/01/1957						
48E--y01 GRV-0201 Graceland Cemetery	W of Greenville	Greenville	061	DEAD	345035	022640	-1.00	NS 0	07/01/1943 Robbins	-1 40	42	6	200		1 00	/ /					CDS/CDS
Pa: rock sample		Greenville	061						01/01/1963	-1											
48E--y01 GRV-0609 Standard Supply	W of Greenville	Greenville	HSID	345030	022915	-1.00	00 0	Robbins	143	40	6	30		20 00	01/01/1950						CDS
		Greenville	061						12/01/1950	1											
48E--y02 GRV-0605 Wynne-Syracuse Site F	W of Greenville	Greenville	HSID	345030	022870	-1.00	00 0	Robbins	113	42	6	15		1 00	/ /						CDS
		Greenville	061						02/01/1954	1											
48E--y03 GRV-2572 SCGV5526				345063	022729	-1.00	00 0		140	3	5	1		-1 00	/ /						CDS
									01/01/1963	1											
48E--y11 GRV-3700 Cassiter & Stokes	W of Greenville			345033	022790	-1.00	00 PA	Vendell Lee	305	45	6	2		12 00	11/23/1990	P					
Water @ 105-125' black rock, 5 gpm @ 120', 3 gpm @ 210'		Greenville	061						11/23/1990	-1				PV							
48E--y01 GRV-0190 W. F. Shelton	W of Greenville	Greenville	VALL	345000	022855	-1.00	00 0	Robbins	74	27	4	8		-1 00	/ /						CDS/CDS
		Greenville	061						02/01/1956	-1											
48E--y02 GRV-0210 W. E. Berry	W of Greenville	Greenville	WIOP	345005	022850	-1.00	00 0	Robbins	143	40	4	3		40 00	01/01/1958						CDS/CDS
		Greenville	061						01/01/1959	-1											
48E--y01 GRV-0056 W. C. Mathews	W of Greenville	Greenville	WIOP	345005	022855	-1.00	00 0	Robbins	200	32	6	3		-1 00	/ /						CDS/CDS
Rock sample		Greenville	061						01/01/1963	-1											
48E--y01 GRV-0210 Julian Cordell	W of Greenville	Greenville	DEAD	345030	022910	-1.00	00 0	Robbins	40	4	4	25		-1 00	/ /						CDS
		Greenville	061						02/01/1950	1											
48E--y01 GRV-0210 Frank Miller	W of Greenville, Jr	Greenville	HSID	345030	022900	-1.00	00 0	Robbins	100	40	6	4		-1 00	/ /						CDS
		Greenville	061						02/01/1960	1											
48E--y01 GRV-0611 Sissiford Site F	W of Greenville	Greenville	WIOP	345005	022855	-1.00	00 0	Robbins	160		4	3		-1 00	/ /						CDS/CDS
		Greenville	061						01/01/1961	-1											
48E--y07 GRV-0615 Earl Owens	W of Greenville	Greenville	HSID	345030	022805	-1.00	00 0	Robbins	125	31	6	20		46 00	01/01/1952						CDS
		Greenville	061						01/01/1959	-1											
48E--y09 GRV-0618 Robert Martin	W of Greenville	Greenville	HSID	345030	022820	-1.00	00 0	Robbins	150	59	6	25		-1 00	/ /						CDS
Grayson Farms		Greenville	063						12/01/1950	-1											
48E--y11 GRV-2150 James Grahes	W of Greenville			345000	022820	-1.00	00 48	Lee & Sies	43	43	24	-1		23 00	03/19/1990	P					
"Water @ 27-43.5', gray sand & silt"		Greenville	061						03/19/1990	-1				CM							
48E--y01 PFS-0069 Albert Chaosen	Georges Crk & Saluda	Greenville	345035	022935	-1.00	00 0	Robbins	115	40	6	1		-1 00	/ /							15
is		Greenville	061						/ /	-1											
48E--y02 PFS-0116 Mr. Waldrop	Easley Hwy on US 123	Greenville	345005	022910	-1.00	00 0	Robbins	80	31	6	-1		-1 00	/ /							15
is		Greenville	061						/ /	-1											
48E--y01 PFS-0143 J. A. McIntyre	Easley Hwy	Greenville	345030	022920	-1.00	00 0	Robbins	126	80	4	3		-1 00	/ /							15
is		Greenville	061						/ /	-1											
48E--y04 PFS-0169 J. A. McSwain	US-123A, W of S	Greenville	345030	022920	-1.00	00			105	-1	6	3		1 00	/ /						
		Greenville	061						/ /	-1											
48E--y01 GRV-0613 Cunningham Nursery	W of Greenville	Greenville	VALL	345000	022900	-1.00	00 0	Robbins	45	40	4	5		1 00	/ /						CDS/CDS
		Greenville	061						09/01/1953	1											
48E--y06 GRV-0613 Lucille Lanford	W of Greenville	Greenville	VALL	345005	022910	-1.00	00 0	Robbins	78	3	6	4		-1 00	/ /						CDS/CDS
		Greenville	061						06/01/1959	-1											

NUMBER OF WELLS IN GRID 48E IS 90

47E--101 GRV-0197 S. G. Fletcher	Greenville	Hamilton	062	HSID 345150 R22015	-1.00	00.0	06/01/1953 Robbins	-1	47	-1	6	40	-1.00	/ /					Pipe
47E--102 GRV-0208 C. H. Crews, Jr.	E of Greenville	Hamilton	062	HSID 345125 R22010	-1.00	00.0	10/01/1961 Robbins	-1	102	50	6	-1	-1.00	/ /					Pipe/Pump
47E--103 GRV-0299 Albert Forrest	Greenville	Hamilton	062	HSID 345130 R22020	-1.00	00.0	05/01/1951 Robbins	-1	110	50	6	20	-1.00	/ /					Pipe
47E--104 GRV-0322 Mrs. S. Middleton	Greenville	Hamilton	062	HSID 345155 R22025	-1.00	00.0	05/01/1962 Robbins	-1	83	22	6	25	20.00	01/01/1955					Pipe
47E--105 GRV-0423 H. F. Sanders	E of Greenville	Hamilton	062	ELAI 345155 R22025	-1.00	00.0	11/01/1955 Robbins	-1	129	42	6	20	-1.00	/ /					Pipe
47E--106 GRV-0432 Mrs. H. H. Moline	E of Greenville	Hamilton	062	HSID 345155 R22015	-1.00	00.0	10/01/1956 Robbins	-1	65	30	6	8	-1.00	/ /					Pipe
47E--107 GRV-0438 Milton J. Steel	E of Greenville	Hamilton	062	DFAP 345121 R22025	-1.00	00.0	09/01/1958 Robbins	-1	135	42	6	4	-1.00	/ /					Pipe
47E--108 GRV-0542 Jacob A. Lemon Pa	E of Greenville	Hamilton	062	HSID 345103 R22020	-1.00	00.0	05/01/1951 Robbins	-1	140	41	6	20	-1.00	/ /					Pipe
47E--109 GRV-0620 Joe Graham	E of Greenville	Hamilton	062	HSID 345145 R22035	-1.00	00.0	05/01/1950 Robbins	-1	226	35	6	25	20.00	01/01/1955					Pipe/Pump
47E--110 GRV-0649 Tom Inglesby	E of Greenville	Hamilton	062	ELAI 345020 R22010	-1.00	15.0	Robbins	-1	150	22	6	25	-1.00	/ /					Pipe
47E--201 GRV-0543 Goldsmith & Sassano	Greenville	Hamilton	062	ELAI 345020 R22010	-1.00	15.0	Robbins	-1	101	69	6	25	-1.00	/ /					Pipe
47E--202 GRV-0544 Goldsmith & Sassano	Greenville	Hamilton	062	[illegible] R22020	-1.00	00.0	Robbins	-1	195	35	6	20 R	[illegible]						
47E--301 GRV-1763 J. Ferrell for "E gpm 5 230', 10 gpm 5 305'"	Greenville	Hamilton	062	ELAI 345050 R22355	-1.00	15.0	01/01/1920 Robbins	-1	382	-1	6	15	265.00	01/01/1920					Other
47E--401 GRV-0016 Ballentine Parking	Greenville	Greenville	061	ELAI 345050 R22355	-1.00	05.0	01/01/1920 Robbins	-1	433	5	6	50	235.00	01/01/1945					Other
47E--402 GRV-0017 Ballentine Parking	Greenville	Greenville	061	HSID 345050 R22355	-1.00	45.0	02/01/1945 Robbins	-1	342	-1	6	50	260.00	01/01/1952					Other
47E--403 GRV-0205 Ballentine Parking	Greenville	Greenville	061	HSID 345015 R22335	-1.00	00.0	01/01/1952 Robbins	-1	35	43	6	15	-1.00	/ /					Other
47E--404 GRV-0665 J. L. Anderson	Greenville	Greenville	061	HSID 345020 R22430	-1.00	05.0	02/01/1952 Robbins	-1	368	22	6	53	50.00	/ /					Other
47E--501 GRV-0040 Claussen Bakery	Greenville	Greenville	061	ELAI 345060 R22605	923.00	49.00	/ /	-1	34	3	72	-1	0.00	01/01/1900					Other
47E--502 GRV-1552 City of Greenville Dug before 1894; cased w/brick; found at construction site	Peace Performance Arts Center	Greenville	061	-1	-1	-1.00	00.0	/ / Hughes	-1	185	51	6	4	35.00	06/15/1930	F			
47E--101 GRV-0722 H. A. Griffith	Greenville			-1	-1	-1.00	15.0	01/15/1930 Hughes	-1	163	43	6	303	40.00	01/01/1967	F			
47E--102 GRV-0723 Robbins Bros	Greenville			-1	-1	-1.00	00.0	09/19/1960 Hughes	-1	105	38	6	12	10.00	07/01/1950	F			
47E--105 GRV-0726 R. H. Vaughn	Greenville			-1	-1	-1.00	00.0	10/20/1960 Hughes	-1	265	35	6	20	20.00	01/15/1930	F			
47E--106 GRV-0727 J. T. Brasolle	Greenville			-1	-1	-1.00	00.0	04/16/1930 Hughes	-1										

NUMBER OF WELLS IN GRID 47E 15 315

[illegible] GROUND WATER DATA BROWSER [illegible] WELL LOCATION [illegible]

SOURC F	COUNTY F	OWNER	OWNER'S ID F	LOCATION	TOPOG	LAT	LONG	ELEVATION	WELL	DRILLER	D	CASING	GEN P	WATER LEVEL	[illegible]
Second Level		[illegible]													

	DATE DRILLED	COMP	DEPTH	CASING TYPE
[illegible]				

```
[illegible]                                                      Paris Mountain
48E--d00 GRV-0659 George Latham        NW of Greenville      Flat 345425 822925  -1.00  00 R   Robbins              100  30  6   5    1.00 / /
         Pa                                      Paris Mountain    040                               03/05/1956      -1
48E--d01 GRV-2495 Blackberry Vly Lndfl E4B-01  Blackberry Valley Landfill  345456 822923  1.00  05                  12  -1 -1  -1   -1.00 / /              C2bs
         DHEC Storet files: Pa                   Paris Mountain    040                                  / /          -1
48E--d02 GRV-2496 Blackberry Vly Lndfl E4B-02  Blackberry Valley Landfill  345456 822913 -1.00  05                  25  -1 -1  -1   -1.00 / /              C2bs
         DHEC Storet files: Pa                   Paris Mountain    040                                  / /          -1
48E--d03 GRV-2497 Blackberry Vly Lndfl E4B-03  Blackberry Valley Landfill  345459 822814 -1.00  05                  40  -1 -1  -1   -1.00 / /              C2bs
         DHEC Storet files: Pa                   Paris Mountain    040                                  / /          -1
48E--d04 GRV-2498 Blackberry Vly Lndfl E4B-04  Blackberry Valley Landfill  345452 822814 -1.00  05                  35  -1 -1  -1   -1.00 / /              C2bs
         DHEC Storet files: Pa                   Paris Mountain    040                                  / /          -1
48E--d05 GRV-2596                  SCGV5538                         345422 822859 -1.00  00                         -1  -1 -1  -1   -1.00 / /              C2bs
                                                                                                        / /          -1

48E--d21 GRV-1377 Ida Motes            NW of Greenville             345499 822899 -1.00  00 RA  Carolina           170  49  6  30   -1.00 / /           P
         "Fracture @'455''"                      Paris Mountain    040                               01/21/1989      -1              PV
48E--d23 GRV-1379 Richard Fennell      NW of Greenville             345499 822899 -1.00  00 AE  Kellett             25  15 24   0   -1.00 / /           F
         "Dry hole (rock)"                       Paris Mountain    040                               10/27/1986      -1
48E--d24 GRV-1380 Mrs. Boswell         NW of Greenville             345499 822999 -1.00  00 RA  Robbins            490  55  6   5   40.00 01/05/1992    F
         "Fractures @ 80', 490''"                Paris Mountain    040                               01/05/1992      -1              PV
48E--d25 GRV-1381 Anna M. Galloway     NW of Greenville        MTOP 345499 822999 -1.00  00 RA  Robbins            170  60  6   ?   50.00 10/11/1986    F
         "Fractures @ 160''"                     Paris Mountain    040                               10/21/1986      -1              PV
48E--d26 GRV-1382 Lynn Swayngham       NW of Greenville             345499 822999 -1.00  00 RA  Kellett            130  90  6   ?   20.00 02/09/1987    F
         "6 gpm @ 130''"                         Paris Mountain    040                               02/09/1987      -1              PV
48E--d27 GRV-1830 Jimmy Prince         NW of Greenville             345499 822999 -1.00  00 AE  Chandler            56  13 24  -1   30.00 08/27/1987    F
                                                 Paris Mountain    040                               08/27/1987      -1              CM

48E--e21 GRV-1383 Jim Thomas           NW of Greenville             345499 822999 -1.00  00 RA  Hughes             170  51  6   0   30.00 07/07/1986    P
         Water-bearing zones @ 90' & 155'        Paris Mountain    040                               07/07/1986      -1              PV
48E--e22 GRV-1387 David Gosnell        NW of Greenville             345499 822999 -1.00  00 RA  Kellett            205  60  6   3   30.00 03/28/1988    P
         "3 gpm @ 205''"                         Paris Mountain    040                               03/28/1988      -1              PV
48E--e23 GRV-1378 Buster Anderson      NW of Greenville        HSID 345499 822999 -1.00  00 RD  Carolina           230  37  6  40   40.00 07/15/1986    P
         "Fractures @ 200''"                     Paris Mountain    040                               07/15/1986      -1              PV
48E--e24 GRV-2176 Gary Holliday        NW of Greenville             345499 822999 -1.00  00 RA  Phillips           470  58  6  -1  300.00 12/08/1989    P
                                                 Paris Mountain    040                               12/08/1989      -1              PV
48E--f01 GRV-0585 Henry Theodore       NW of Greenville        HSIP 345307 822910 -1.00  00 R   Robbins            182  60  6  15   40.00 01/01/1947               C2bs/Ocl
                                                 Paris Mountain    040                               01/01/1947      -1
48E--f02 GRV-0681 Jack Eardo           NW of Greenville        MTOP 345330 822940 -1.00  00 R   Robbins            105  58  6   ?   -1.00 / /                  C2bs/Ocl
                                                 Paris Mountain    040                                  / /          -1
48E--f21 GRV-1882 Gerald Knecht        NW of Greenville             345399 822999 -1.00  00 RA  Kellett            330  57  6  30   20.00 07/12/1988    F
         "30 gpm @ 330''"                        Paris Mountain    040                               07/12/1988      -1              PV
48E--f22 GRV-2468 Rick Bryant          NW of Greenville             345399 822999 -1.00  00 RA  Kellett             80  20  6   1   15.00 09/06/1989    P
         "Pump set @ 60''"                       Paris Mountain    040                               09/06/1989      -1              PV
48E--g21 GRV-2730 Jimmy Clark          NW of Greenville             345399 822899 -1.00  00 RA  Robbins            210  35  6   6   35.00 09/27/1991    P
         Water @ 185-190' hard black & white granite  Paris Mountain  040                            09/27/1991      -1              PV
48E--h21 GRV-1384 Leonard Brown        NW of Greenville             345399 822799 -1.00  00 RA  Robbins            810  95  6   3   30.00 09/27/1987    P
                                                 Paris Mountain    040                               09/27/1987      -1              PV
48E--h22 GRV-1385 Leonard Brown        NW of Greenville             345399 822799  1.00  00 RA  Robbins            390  -1  6   2   30.00 09/30/1987    P
                                                 Paris Mountain    040                               09/30/1987      -1              PV
48E--h24 GRV-2149 Lennie Dekalb        NW of Greenville             345399 822799  1.00  00 RA  Wendell Lee        205 107  6  50   25.00 04/20/1990    P
         "Water @ 147-162', soft brown rock"     Paris Mountain    040                               04/20/1990      -1              PV
48E--j21 GRV-1496 Williams Chevron     NW of Greenville             345399 822599  1.00  05 AH  Froehling&Robertson 31  19  2  -1   -1.00 / /
         "Bentonite seal 16'-14''; gravel pack 16-29'"  Paris Mountain  040                          04/19/1988      -1              PV
48E--j22 GRV-1497 Williams Chevron     NW of Greenville             345399 822599  1.00  08 AH  Froehling&Robertson 31  19  2  -1   -1.00 / /
         "Bentonite seal from 17'-15''; gravel pack 17-29'"  Paris Mountain  040                     04/19/1988      -1              ST
48E--j23 GRV-1498 Williams Chevron     NW of Greenville             345399 822599 -1.00  05 AH  Froehling&Robertson 26  16  2  -1   -1.00 / /
         "Bentonite seal from 14'-12''; gravel pack 14-26'"  Paris Mountain  040                     04/20/1988      -1              ST
48E--j24 GRV-1499 Williams Chevron     NW of Greenville             345399 822599 -1.00  05 AH  Froehling&Robertson 31  19  2  -1   -1.00 / /
         Gravel pack 17-30'                      Paris Mountain    040                               04/21/1988      -1              PV
48E--j25 GRV-1500 Williams Chevron     NW of Greenville             345399 822599  1.00  05 AH  Froehling&Robertson 26  14  2  -1   -1.00 / /
         Gravel pack 14-26'                      Paris Mountain    040                                  / /          -1              PV
48E--k21 GRV-2459 Gene Mills   MW-1    S of Travelers Rest          345399 822599  1.00  08 AH  Groundwater Prot. Inc 30 15  2  -1   20.00 05/02/1990    P
         Bentonite pellets from 11.0' to 13.0'   Paris Mountain    040                               05/02/1990      -1              PV
```

[illegible]

48E--k15 GRV-2163 Cone Mills MW-5A S of Travelers Rest 345299 822599 -1.00 98 AA Groundwater Prot Inc [illegible]
Bentonite pellets from 18.5' to 20.5' Paris Mountain 040 05/15/1990 -1 PV

48E--k26 GRV-2454 Cone Mills P-1 S of Travelers Rest 345299 822599 -1.00 98 AA Groundwater Prot Inc 12 2 1 [illegible] 3.50 05/1[illegible]/1990 P
Bentonite pellets from 1.5' to 2.5' Paris Mountain 040 05/16/1990 -1 PV

48E--k27 GRV-2465 Cone Mills EXT-1 S of Travelers Rest 345299 822599 -1.00 98 AA Groundwater Prot Inc 15 41 2 -1 -1.00 / / P
Bentonite pellets from 32.0' to 39.0' Paris Mountain 040 05/18/1990 -1 PV

48E~~--a01 GRV-0003 J. [illegible]~~ NW of Greenville HSID 345240 822715 -1.00 00 0 Harris 113 90 6 5 -1.00 / / C2sp
Greenville 061 / / -1

48E~~--a02 GRV-0462 W. W. McCrary~~ NW of Greenville HSID 345250 822705 -1.00 43 0 Robbins 116 90 6 25 -1.00 / / C2sp
Greenville 061 09/01/1951 -1

48E~~--n01 GRV-0039 J. H. Smith~~ W of Greenville 345245 822815 -1.00 00 0 Harris 126 45 6 7 -1.00 / / C2sp
Paris Mountain 040 / / -1

48E--~~a02 GRV-0419 Mrs. Mae Williams~~ NW of Greenville FLAT 345210 822800 -1.00 45 0 Robbins 113 43 6 4 -1.00 / / C2sp
Greenville 061 02/01/1952 -1

48E--n03 ~~GRV-0422 W[illegible] Radio Station~~ NW of Greenville FLAT 345205 822805 -1.00 45 0 Robbins 102 45 6 8 -1.00 / / C2sp
Greenville 061 11/01/1958 -1

48E--o01 PIS-~~0037 Elliot Watson~~ Saluda Lake 345215 822945 -1.00 00 0 Robbins 251 20 6 19 -1.00 / / IS
is Greenville 061 / / -1

48E--o02 PIS-~~0039 John Watson~~ Saluda Lake 345230 822920 -1.00 00 0 Robbins 155 20 6 15 -1.00 / / IS
is Greenville 061 / / -1

48E--o03 PIS-~~0040 Kenneth [illegible]~~ Saluda Lake 345230 822930 -1.00 00 Robbins 99 [illegible] 6 2 -1.00 / / IS
is Greenville 061 / / -1

48E--p01 PIS-~~0105 Louis [illegible]~~ on Saluda River 345130 822920 -1.00 00 0 Robbins 123 45 6 17 35.00 / / IS
is Greenville 061 / / -1

48E--p02 ~~PIS-0120 Bill Ballentine~~ nr. dam on Saluda R 345130 822920 -1.00 00 0 Robbins 127 55 6 [illegible] -1.00 / / IS
is Greenville 061 / / -1

48E--p03 PIS-~~0121 Dr. Robinson~~ Saluda Lake 345120 822915 -1.00 00 0 Robbins 127 70 6 10 -1.00 / / IS
is Greenville 061 / / -1

48E--p04 ~~GRV-0503 W. E. Runge~~ W of Greenville HSID 345145 822910 -1.00 00 0 Robbins 116 50 6 25 -1.00 / / C2bs/Oil
Greenville 061 05/01/1950 -1

48E--q01 ~~GRV-0501 E. W. Montgomery~~ W of Greenville HTOP 345150 822850 -1.00 00 0 Robbins 144 45 6 10 -1.00 / / C2bs/Oil
Greenville 061 05/01/1950 -1

48E~~--q02 GRV-0432 Mr. Taylor~~ NW of Greenville VALL 345140 822855 -1.00 00 0 Robbins 101 35 6 [illegible] -1.00 / / C2bs/Oil
Greenville 061 07/01/1951 -1

48E--r11 ~~GRV-1326 [illegible] & Lisa Cross~~ W of Greenville 345129 822399 -1.00 99 9A Kellett 120 35 6 [illegible] 20.00 07/12/19[illegible] P
"3 gpm @ 160'" Greenville 061 07/12/19[illegible] -1 PV

48E--s01 ~~GRV-0109 [illegible]~~ W of Greenville FLAT 345140 822715 -1.00 48 0 Robbins 116 [illegible] 6 [illegible] -1.00 / / C2sp
Greenville 061 09/01/195[illegible] -1

48E--s02 ~~GRV-0110 Mr. Lloyd, Jr.~~ W of Greenville FLAT 345145 822715 -1.00 [illegible] Robbins 127 [illegible] 11.68 11/0[illegible]/1962 C2sp
Greenville 061 09/01/195[illegible]

48E--s03 ~~GRV-0595 Ed Mason, Jr~~ W of Greenville HTOP [illegible] -1.00 [illegible] Robbins 135 [illegible] -1.00 [illegible] C2sp
Greenville 061 [illegible]

48E--r04 ~~GRV-0153 Mr. Lloyd~~ W of Greenville FLAT 345140 822715 -1.00 [illegible] Robbins 102 [illegible] 12 -1.00 [illegible] C2sp
Greenville 061 [illegible]

48E--s05 ~~GRV-0454 Mr. Lloyd~~ W of Greenville FLAT 345140 822715 -1.00 00 0 Robbins 101 35 6 [illegible] -1.00 [illegible] C2sp
Greenville 061 07/01/195[illegible]

48E--r11 ~~GRV-2010 [illegible]~~ W of Greenville 345129 822[illegible] -1.00 [illegible] [illegible] 455 [illegible] 10.00 [illegible] P
" 5 gpm @ 120'" Greenville 061 [illegible] PV

48E~~--t01 GRV-0057 Southern Weaving~~ Greenville DRAW 345125 822600 -1.00 [illegible] Robbins 217 35 6 35 9.00 / / C2sp
Greenville 061 / /

48E~~--t02 GRV-0058 Southern Weaving~~ Greenville DRAW 345125 822600 -1.00 35 0 Robbins 225 [illegible] 6 [illegible] 11.00 / / C2sp
Greenville 061 / / -1

48E~~--t03 GRV-[illegible] Southern Weaving~~ Greenville 345130 822610 -1.00 IN [illegible] 125 -1.00 [illegible] C2sp
cased [illegible] Greenville 061 / /

48E~~--u01 GRV-0040 Duke Power Co.~~ Greenville FLAT 345140 822600 -1.00 [illegible] [illegible] 299 [illegible] 25.00 [illegible] [illegible]
Greenville 061

48E~~--u02 GRV-0051 Monaghan Mills~~ Greenville HSID 345155 822530 -1.00 35 0 Robbins [illegible] / / [illegible]
Greenville 061 / / -1

48E~~--u03 GRV-0056 Monaghan Mills~~ Greenville FLAT 345155 822525 -1.00 35 0 Robbins 209 [illegible] -1.00 [illegible]
Greenville 061 / / -1

48E~~--v01 GRV-0115 Parker High School~~ Greenville FLAT 345135 822530 -1.00 35 0 Robbins [illegible] 35 6 20 -1.00 01/01/19[illegible] C2sp
Greenville 061 12/01/19[illegible]

[illegible]

[illegible] or abandoned

```
[illegible]                                   Greenville              HSID [illegible] 822940  -1.00  [illegible]  Robbins          200  [illegible]     [illegible]   20.00 01/01/1947         [illegible]
                                                       Greenville          061                               01/01/1947       -1
48E--y01 GRV-0201 Graceland Cemetery         W of Greenville          SPAN 345035 822640  -1.00  VS 0  Robbins          60  [illegible] 6 100   -1.00  / /                    C?ts/[illegible]
        Has rock sample                                Greenville          061                               01/01/1963       -1
48E--y01 GRV-0609 Standard Supply            W of Greenville          HSID [illegible] 822[illegible]  -1.00  [illegible]  Robbins          [illegible]                [illegible] 01/01/1950         C?t[illegible]
                                                       Greenville          061                               12/01/1950       -1
48E--w02 GRV-0625 Upper Syracuse Store       W of Greenville          HSID [illegible] 822705  -1.00  10 0  Robbins          113  [illegible] 6 [illegible]   -1.00  / /               C?ts
                                                       Greenville          061                               02/01/1954       -1
48E--w03 GRV-2575                  SCGVS52K                                345069 822729  -1.00  00 0                    140  -1 -1  [illegible]   -1.00  / /               C?t[illegible]
                                                                                                             01/01/1967       -1
48E--w11 GRV-2700 Charles W. Sanders         W of Greenville                  345099 822799  -1.00  00 RA  Wendell Lee      305  65  6  8     12.00 11/23/1990  P
        Water @ 105-125' black rock, 5 gpm @ 120', 3 gpm @ 230'  Greenville          061                               11/23/1990       -1            PV
48E--x01 GRV-0190 W. F. Shelton              W of Greenville          VALL 345000 822855  -1.00  00 0  Robbins          76  25  6  8     -1.00  / /      . . . . . . . . . . C?ts/Gsl
                                                       Greenville          061                               02/01/1956       -1
48E--x02 GRV-0212 W. C. Earry                W of Greenville          HIOP 345005 822850  -1.00  00 0  Robbins          137  30  6  7     10.00 01/01/1958         C?t[illegible]/Gsl
                                                       Greenville          061                               01/01/1958       -5
48E--x03 GRV-0056 W. D. Hughes               W of Greenville          HIOP 345005 822855  -1.00  00 0  Robbins          200  70  6  3     -1.00  / /               C?t[illegible]/Gsl
        Rock sample                                    Greenville          061                               03/01/1961       -1
48E--x04 GRV-0200 Talmer Tondell             W of Greenville          SPAN 345005 822910  -1.00  00 0  Robbins          60  [illegible]  6  20    -1.00  / /               C?t[illegible]
                                                       Greenville          061                               09/01/1950       -1
48E--x05 GRV-0610 Frank Seffer               W of Greenville          HSID 345005 822930  -1.00  0 0   Robbins          100  [illegible]  6  [illegible]   -1.00  / /               C?t[illegible]
                                                       Greenville          061                               01/01/1960       -1
48E--x06 GRV-0612 Stafford Sies Co           W of Greenville          HIOP 345005 822855  -1.00  35 0  Robbins          168  [illegible]  6  5     -1.00  / /      . .     C?ts/Gsl
                                                       Greenville          061                               05/01/1961       -1
48E--x07 GRV-0615 Bob Owens                  W of Greenville          HSID 345030 822805  -1.00  00 0  Robbins          125  75  6  20    46.00 01/01/1952 . . . . . . . . . . C?ts
                                                       Greenville          061                               01/01/1959       -1
48E--x08 GRV-0618 Robert Martin --           W of Greenville          HSID 345030 822820  -1.00  00 0  Robbins          150  59  6  25    -1.00  / /      . . . . . . . . . . . C?bs
        Graymont Farms                                 Greenville          061                               12/01/1950       -1
48E--x11 GRV-2150 James Graham             . W of Greenville                  345099 822879  -1.00  00 4B  Lee & Sies       43   43 24  -1    23.00 03/19/1990  P
        "Water @ 27-43.5', gray sand & silt"           Greenville          061                               03/19/1990       -1            CX
48E--y01 PIS-0049 Albert Chapman             Georges Crk & Saluda             345035 822935  -1.00  00 0  Robbins          115  40  6  1     -1.00  / /      . . . .     . . . . . . IS
        is                                             Greenville          061                                / /             -1
48E--y02 PIS-0114 Mr. Waldrop                Easley Hwy on US 123             345005 822910  -1.00  00 0  Robbins          80   31  6  -1    -1.00  / /                       IS
        is                                             Greenville          061                                / /             -1
48E--y03 PIS-0143 I. A. McIntyre             Easley Hwy                       345030 822920  -1.00  00 0  Robbins          126  80  6  7     -1.00  / /                       IS
        is                                             Greenville          061                                / /             -1
48E--y04 PIS-0169 I. A. McIntyre             US-123A, W of S                  345030 822920  -1.00  00                      105  [illegible]  6  7     -1.00  / /       .
                                                       Greenville          061                                / /             -1
48E--y01 GRV-0613 Rockefeller Nursery        W of Greenville          VALL 345000 822930  -1.00  15 0  Robbins          65   40  6  8     -1.00  / /                     . C?ts/Gsl
                                                       Greenville          061                               09/01/1953       -1
48E--y05 GRV-0612 Louise Lanford             W of Greenville          VALL 345005 822910  -1.00  00 0  Robbins          78   [illegible]  6  4     -1.00  / /                     . C?ts/Gsl
                                                       Greenville          061                               06/01/1959       -1


                    NUMBER OF WELLS IN GRID 48E       15   90
```

APPENDIX D

GEOPROBE

THE USE OF SMALL DIAMETER PROBING EQUIPMENT FOR CONTAMINATED SITE INVESTIGATION

by: Thomas M. Christy and Stephen C. Spradlin

Geoprobe Systems
Salina, Kansas

ABSTRACT

The past decade has witnessed a dramatic increase in the number of contaminated sites being investigated in the United States. This increase in subsurface investigation has spurred a corresponding increase in the development of subsurface sampling tools and methods. The past five years, in particular, have seen the development of small diameter (1" to 1.4" O.D.) percussion driven probing tools which can be used for the recovery of soil vapor, soil core and groundwater samples. This development has placed heretofore unavailable tools at the disposal of site investigators.

Mechanized, vehicle mounted soil probe systems apply both static force and hydraulically powered percussion hammers for tool placement. Static down forces up to 3,000 lbs combined with percussion hammers of eight (8) horsepower continuous output are typical on equipment available to the field investigator. Using these energies, probing tools have been used for sampling a variety of media at depths exceeding 70 feet.

Advantages of probing equipment which have contributed to its increasing usage in recent years include: ease of mobilization, absence of borehole cuttings, minimization of surface disturbance, and speed of sample collection.

This paper focuses on the field application of hydraulic probing equipment including: the suitability of probing operations with respect to various soil types and lithologies to probing operations; sampler types and recovery quantities for various media, and innovative probing applications presently being tested.

INTRODUCTION

The purpose of this paper is to discuss the use of hydraulically powered soil probing equipment for soil vapor, soil core, and groundwater sampling applications, particularly as they relate to environmental site investigations.

Drilling equipment capable of cutting and removing soil and rock matter while advancing a borehole are the principal tools historically employed for subsurface investigation in the United States. These tools, developed originally for investigation of soil mechanical properties or for the

purpose of installing water supply wells, have made a successful transition into the environmental arena. The past five years have seen the development of probing tools for use on certain environmental site investigation tasks previously accomplished with drilling.

In contrast to drilling techniques, probing tools do not remove cuttings from the bore hole, but rather depend on compression of soil or rearrangement of soil particles to permit entry and advancement of the tool string.

Although we know of no codification of the term "soil probing" or "probing tools", both terms shall be used in this paper to refer to samplers and tools which are driven into the ground using percussive action. This distinction will serve to separate soil probing tools from cone penetrometers or sampling penetrometers which rely on static force alone for advancement of the tool string.

This paper will discuss the capabilities of hydraulic percussion probing machines and the tools used for sampling various media.

EQUIPMENT CONFIGURATIONS

In order to understand the use of soil probing tools for sampling purposes it is helpful to understand configurations in which this equipment is deployed and available to the field practitioner.

Steel probes driven into the ground using apparatus mounted in cargo vans have been previously discussed by Thompson and Marrin (1984, 1987), Tillman (1989), Schubring (1989), Joyner and Thomsen (1990), Howe and Gapinske (1991), and others. Typically, a hydraulic probing device is mounted in the back of a pick-up truck or cargo van as shown in Figure I. A probe unit mounted in a cargo van with an on-board laboratory is shown in Figure II. Other vehicles such as the Chevrolet Suburban shown in Figure III are also employed.

There are several factors which field investigators consider in selecting a carrier vehicle. Most investigators combine some form of field analytical capability with their probing unit and therefore require laboratory work space within the vehicle. It is also desirable to provide a secure enclosure for the hydraulic probe unit and tools. All of the vehicles shown in Figures I, II, and III use hydraulic pumps belt-driven by the vehicle engine to provide power to the probing unit. However, auxiliary engine type probe units are also in use.

One function of the carrier vehicle is to provide static weight for advancement of the probing tools. In practice, probing tools are advanced as far as possible using only the static weight of the carrier vehicle. Potential static forces applied by various carrier vehicles are shown on Figure IV. As can be seen from this figure, applied static force varies with the weight and cargo of the carrier as well as the distance that the probe unit is positioned from the carrier. This static force is often sufficient to advance a one (1) inch diameter tool string to depths of 20 feet in soils consisting of silts or low friction clayey silts.

Greater depth is achieved using the combined effect of the vehicle weight and hydraulic hammer percussion. Although various hammer configurations have been used in the field, the most common in use today applies an impulse force of 600 to 1200 pounds to the top of the probing tool string at a frequency of 30 Hz.

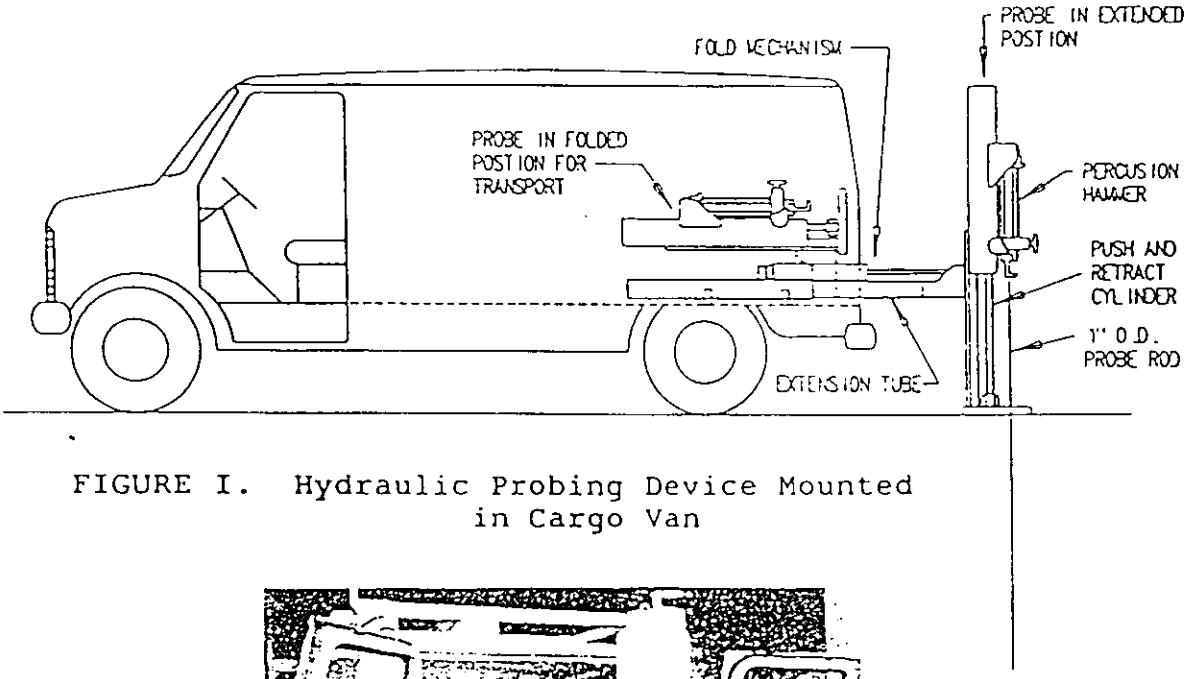

FIGURE I. Hydraulic Probing Device Mounted in Cargo Van

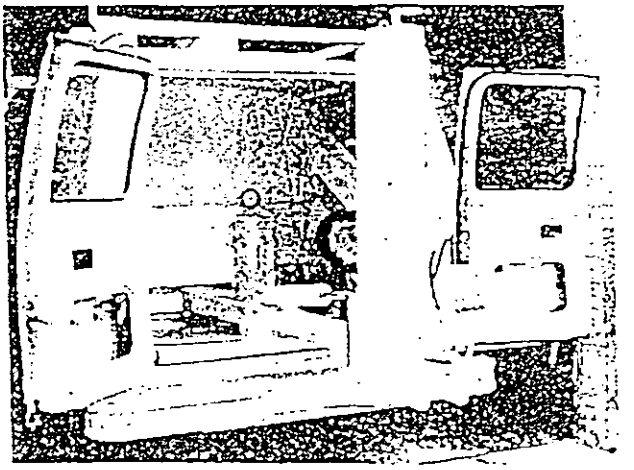

FIGURE II. Cargo Van with On-board Laboratory and Hydraulic Soil Probe

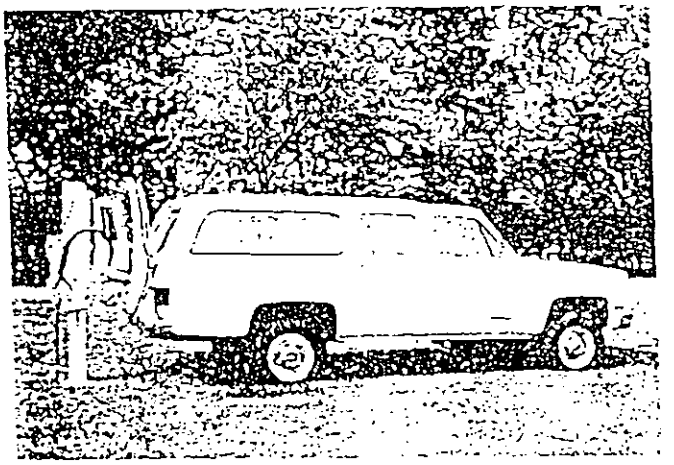

FIGURE III. Probe Unit Mounted in Chevrolet Suburban

Percussion is often required when probing near the ground surface to penetrate hard packed soil and gravel zones. The probe is then allowed to penetrate using only static force until refusal is again encountered, at which time percussion is reapplied. Percussion is applied as required when probing through sands, gravels, hard pans, high friction clays, tills, fill materials, and surface frost. Advancement of probing tools beyond a depth of 24 feet without the use of percussion is rare in all geologic settings.

Prediction of refusal depth for probing tools is difficult. The percussive action of these probing units depends upon a rearrangement of vibrated soil particles in order to allow entry of the probe. Hence, cemented soils or rock are unsuitable for probing applications. Soils containing cobbles are often penetrated until a large or immovable rock is encountered. Probes will often glance off of cobbles and percussion can sometimes break smaller stones but larger boulders have essentially the same effect as bedrock.

Figure V shows penetration rates for probing to 30 feet in an alluvial setting using a Geoprobe 8-M equipped with 1 in. O.D. tools and a 1.10 in. O.D. conical point. Penetration rates shown on Figure V do not include the time to add probe rods to the tool string or to reposition the probing unit. The soils encountered in this instance required percussion driving of the probe rods the entire 30 feet. Total depth was achieved in 15 minutes. In practice, operators report probing to 20 feet and removing the tool string in a total time of 10 to 20 minutes. Soils which permit penetration rates of less than 1 ft. per minute would be classified as refusal material by most operators.

Sampling to 30 feet using probing units is common. Several operators have reported sampling to depths greater than 50 feet. One operator reported vapor sampling to 75 feet in an eolian silt using 1 inch diameter probe rods.

SOIL VAPOR SAMPLING

Driven probes have been used for decades in preliminary foundation investigations but their current popularity in the environmental field began with the widespread use of soil vapor analysis for site investigation applications. The authors estimate that up to 50 percent of the work performed with hydraulic probing units involves soil vapor sampling.

Several different configurations of vapor sampling tools are currently in use in the United States. Three such configurations are shown on Figure VI. Tip arrangement (A) is the most commonly used of these three. In this arrangement, the probing string is pulled back, disengaging the expendable point and providing an open passage for vapor flow up the probe rods in response to an applied vacuum. Configuration (B) operates on the same principle as (A), with the exception that it utilizes a retractable point.

The system shown in (C) can actually be used with either an expendable or a retractable point. The major difference in this system is that it allows the attachment of low internal volume tubing to the vapor sampling point. This tubing is added to the probing rods after the rods have been driven to depth and pulled back to remove the drive point. Tubing materials for use in this application include Teflon, stainless steel, or polyethylene. The sorption characteristics of certain tubings may not permit their application in all circumstances. The major advantage of an

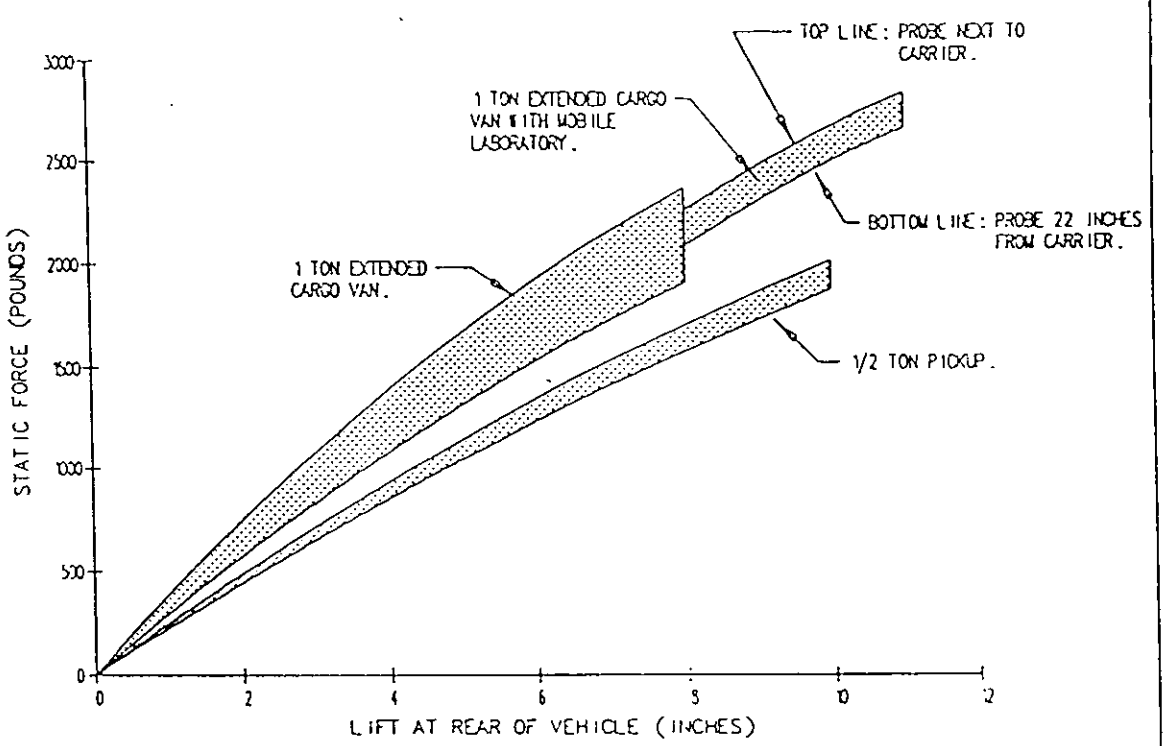

FIGURE IV. Static Forces Applied by Various Carrier Vehicles

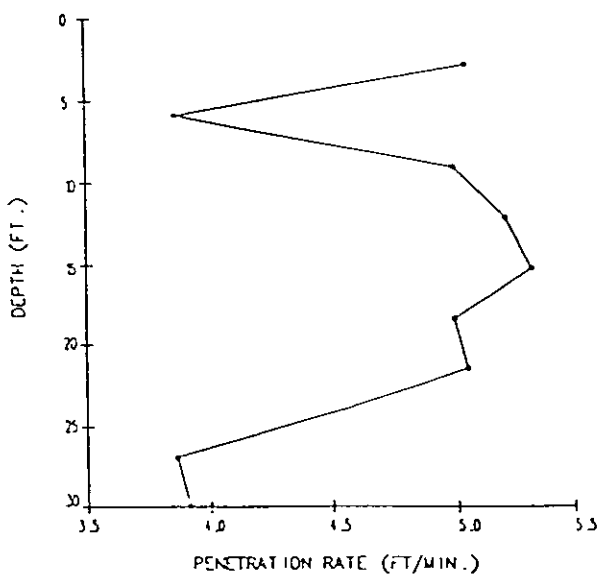

FIGURE V. Penetration Rate of Geoprobe 8-M Soil Probe

inner tubing system is the low purge volume offered; from 2.5 to 15.1 ml/ft as opposed to 33 ml/ft for open probe rod. Inner tubing further serves as a continuous, non leaking, conduit which assures that the vapor sample of interest originated at the targeted sample depth rather than at the depth of intermittent rod joints.

The high pressure at the probe tip combined with the vibration of percussion hammer may serve to liquefy soils having high moisture contents. This may result in the flow of liquefied soils from the high pressure region near the tip to the inside of the rod. In fact, soils may flow to fill several feet of probe rod. For this reason it is sometimes desirable to equip the drive point with an O-ring gland seal. This measure is effective in sealing the probe rod end, though it may require removal of the drive point using an inner rod down the bore of the probe rods once the desired sampling depth has been achieved.

Once the proper depth has been achieved and the tip of the probe rod opened, a vacuum is applied to the surface end of the sampling string. Vadose zone soils are found to exhibit considerable variation in their response to applied vacuum. Table I shows the response of alluvial soils when subjected to an initial vacuum pressure of 21 inches Hg. In all cases, the probe rod was pulled back 0.5 inches from the probe tip, 1 liter of sample was collected into an evacuated tank, then a valve between the tank and the probe was closed and the probe rod allowed to recover to atmospheric pressure (column E). The maximum line pressure observed at the probe rod during purging is shown in column (D).

TABLE I
SOIL RESPONSE TO APPLIED VACUUM

(A) POINT	(B) DEPTH (ft.)	(C) TIME TO COLLECT 1 l. (min:sec)	(D) MAX. LINE VACUUM PRESS. (in Hg)	(E) RECOVERY TIME (min:sec)
A	4	:02	0	< :01
B	9	:02	9.5	< :01
C	11	:03	1	< :01
D	16.5	:29	20	< :11
E	24	7:28	20	7:00

High clay content combined with high moisture content is responsible for the low air permeabilities observed in some soils. Extended sampling times as shown with point E in the table above can be troublesome for field samplers. Even minor leakage in the sampling train become significant when exposed to high vacuums for extended periods. It is common to find soils which will not yield vapor. It is therefore critical that the sampler be equipped to check the sampling train for leakage and to measure with certainty the flow of vapor from the probe.

In cases where soils do not yield vapor to the applied vacuum, the sampler may respond by either increasing pullback of the probe rod from the tip in order to expose greater surface area or more permeable zones, or apply a greater vacuum pressure. Alternately, it may be advisable to use the probe to obtain a soil sample at the location and determine the presence of contamination through soil analysis.

The concentration of contaminants in soil vapor is found to vary with purge volume. In practice it is common to select one purge volume, evacuate that purge volume, and then obtain a sample. Other investigators have reported connecting a vacuum pump and pumping for a fixed time period, in which case purge volume will vary. Figures VII and VIII

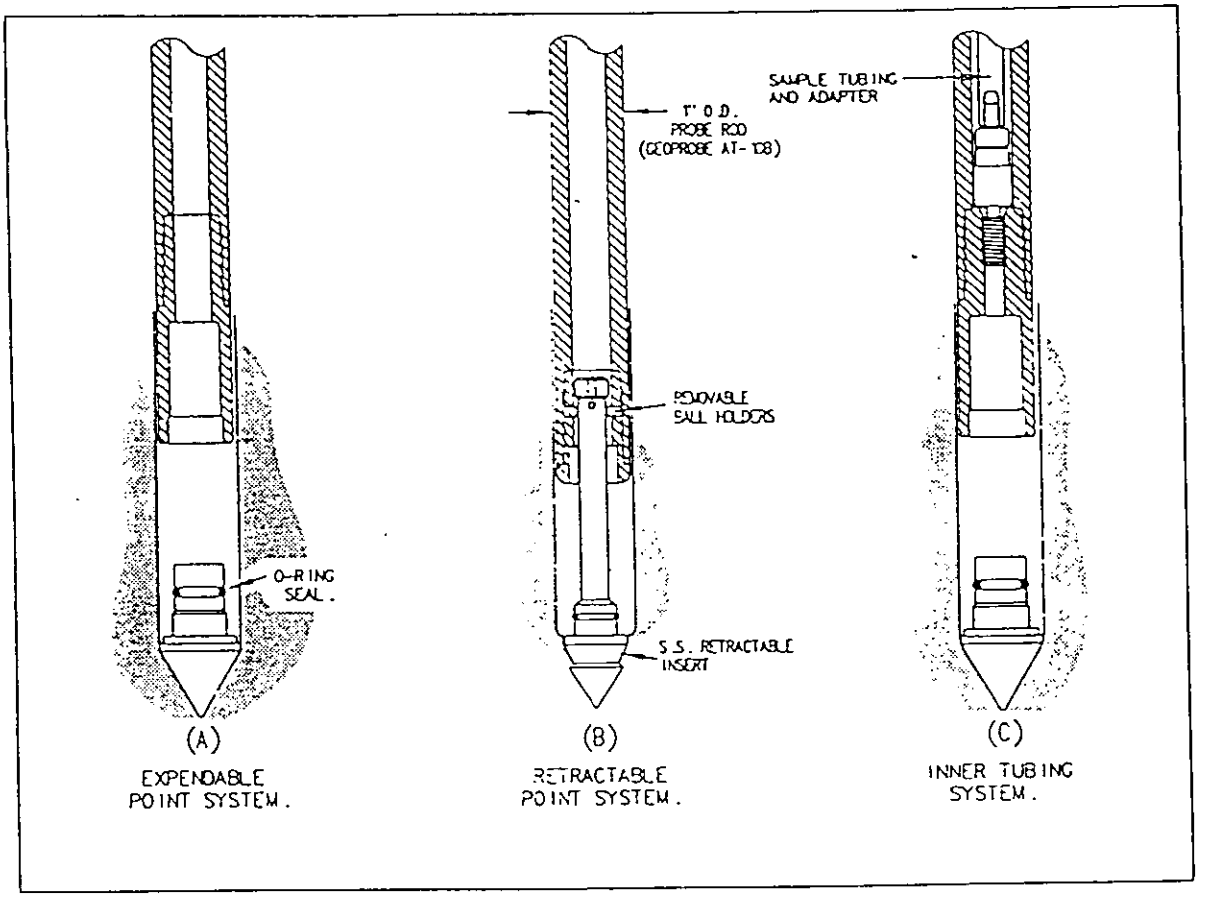

FIGURE VI. Soil Vapor Sampling Tip Configurations

present data for extended purging and analysis at two separate vapor sampling points. In both cases, 250 ml purge volumes were removed from the sample point and a syringe sample obtained for analysis of toluene by GC/PID. Following completion of the analysis, a period of about 12 minutes, 250 ml of vapor was again purged from the system and the analysis repeated. The internal volume of the sampling train in both cases was estimated to be 75 ml.

These figures illustrate the wide variation in soil vapor concentrations which are typical of repeated soil vapor sampling at a given point. Occurrence of the highest concentration at the initial purge may be the result of phase transformation and storage depletion in the soil in closest proximity to the sample hole. Soil at the wall of the probe hole will experience the greatest change in pressure due to sampling, and presumably the greatest shift in the phase distribution of contaminants.

SOIL SAMPLING

Unlike conventional drilling techniques, probing tools do not offer an open borehole into which open soil samplers can be inserted to obtain soil samples at depth. Therefore, special techniques and tools have been developed in order to push a closed sampler to depth, open the sampler, and obtain a discrete soil sample.

Small quantities of soil have frequently been obtained by probe operators by simply disengaging an expendable point at the target depth (Figure VI), pulling back 3 to 6 inches on the probe rods, and then redriving the rods. In this case the end of the rod is simply filled with soil that has collapsed into the open hole or is cut from the wall of the hole. Application of this technique is limited by the small quantity recovered removing the sample from the end of the probe rod can be a bothersome task.

The recovery of larger volumes of soil samples at depth has been made possible by the development of the "Probe-Drive Sampler" by Geoprobe Systems in 1989. A patent for this device, which is shown in Figure IX, is pending. This sampler serves as both the driving point and the sample collection device. The sequence of operation of this sampler is also shown in Figure IX.

The Probe-Drive Sampler is simply attached to the leading end of the probe rod and driven into the subsurface. The threaded stop-pin in the trailing end of the sampler assembly prevents the piston tip and piston rod from sliding into the sample collection tube as the assembly is being driven to depth. At the desired sampling depth, the stop-pin, which is threaded into the drive head of the sampler assembly, is removed using extension rods inserted down the inside diameter of the probe rods. After the stop-pin has been removed, the sampler is again driven forward, this time collecting soil in the sample tube as the piston retracts. The assembly is then brought back to the surface and the soil sample extruded for analysis.

These samplers can be used to any depth that soil conditions will permit penetration by probing tools. Operators routinely use them to collect discrete samples at depths of thirty feet or more. There are three varieties of the sampler, each performing a slightly different task related to volume, regulatory compliance, or soil type. One design features a 1.125 in. O.D. steel thin wall tube with a built-in cutting edge. It collects a sample that is 8.75" long X .96" diameter (106 ml) and is used primarily for collecting samples used for field screening.

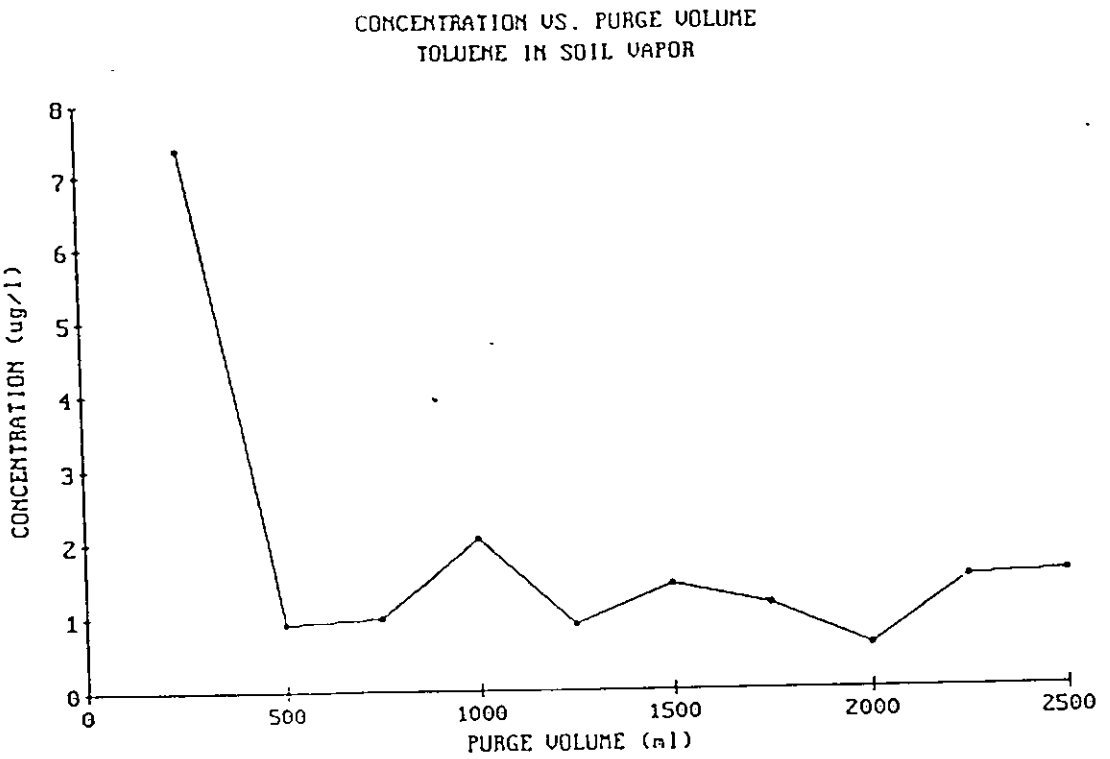

FIGURE VII. Concentration vs. Purge Volume - Location I

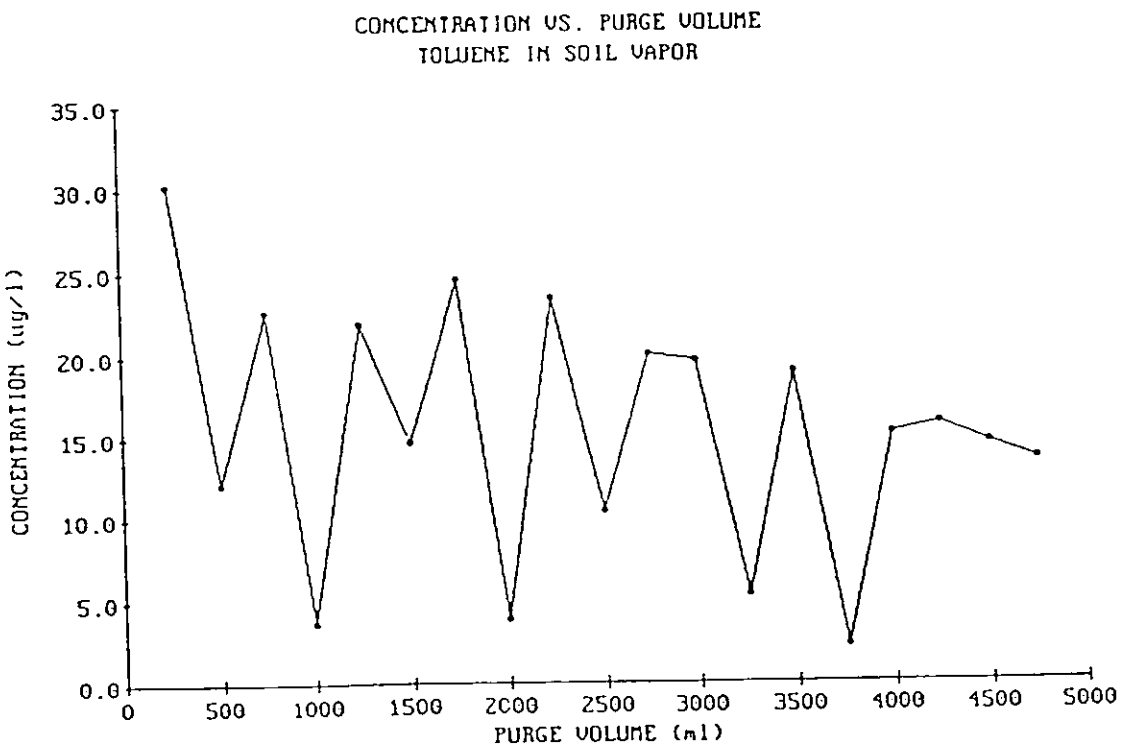

FIGURE VIII. Concentration vs. Purge Volume - Location II

This sampler performs best in relatively soft soils. Another variety features a 1.3 in. O.D. stainless steel sample collection tube and a removable hardened cutting shoe. It collects a sample that is a full 12" long X 1" diameter (158 ml) and is used when the protocol calls for stainless steel. It is well suited for use in rockier soils because of its hardened cutting shoe. The last variety of sampler available is larger (1.44 in. O."D.) than the others and uses either brass or acetate liners. It also has a removable hardened cutting shoe and recovers a sample that is 24" long X 1-1/8" in diameter (400 ml). It is used for protocols that require a larger volume of sample such as for TPH or heavy metals. This sampler is also used when visual logging of the soils is important. Again, the hardened cutting shoe makes this sampler suitable for use in rockier soils.

The forte of the Probe-Drive samplers is in providing operators with discrete soil samples that are relatively undisturbed. Operators can take samples at several different depths at the same location by re-entering the borehole each time a new sample is to be collected and driving the sampler to the next sampling interval. Vertical profiling of contamination is routinely accomplished in this manner. Continuous cores have been successfully collected using the same manner and utilizing the largest probe-drive sampler with the removable liner. In one such operation, a continuous core was collected from the surface to a depth of 18 feet through clays and silts in less than an hour and a half using the hydraulic probe. This required the sampling procedure to be repeated a total of nine times until total depth was achieved.

GROUNDWATER SAMPLING

Driven well points have a long history of use in groundwater extraction. Modern, hydraulically powered probe units are used in much the same manner, except using smaller diameter tools. Past use of percussion driven probes for groundwater sampling has been limited by several factors, chief among these being the suitability of the probe rod materials to withstand the prolonged percussion required to drive samplers to the water table. The operator was limited to sampling groundwater that was conveniently near the surface and in suitable materials. However, materials of construction have now improved to the extent that operators routinely sample groundwater at depths exceeding 30 feet with good success.

Two commonly employed methods of groundwater sampling are shown in Figure X. Configuration (A) simply uses an expendable point which is left off to expose the open bore of the probe rod. The rod is allowed to fill with formation water. Tubing with a bottom check valve is inserted down the bore of the probe rod. This inner tubing is oscillated up and down in rapid 6 to 8 inch strokes to produce a momentum pumping action. In most cases, a few feet of the tubing is filled and removed from the probe rods for collection of the sample. In cases where the probe rod penetrates permeable materials and the water table is shallow (approximately 12 feet or less), the pumping action of the inner tubing may be sufficient to lift sample to ground surface.

Configuration (B) shows a mill slotted well point. This open slotted tool is driven from ground surface into the water table where an inner tubing or smaller diameter bailer is inserted and samples collected as described above. The chief limitation of this tool is that the open slots for water sampling cannot be closed during probe driving, it is therefor subject to cross contamination by soils in the vadose zone.

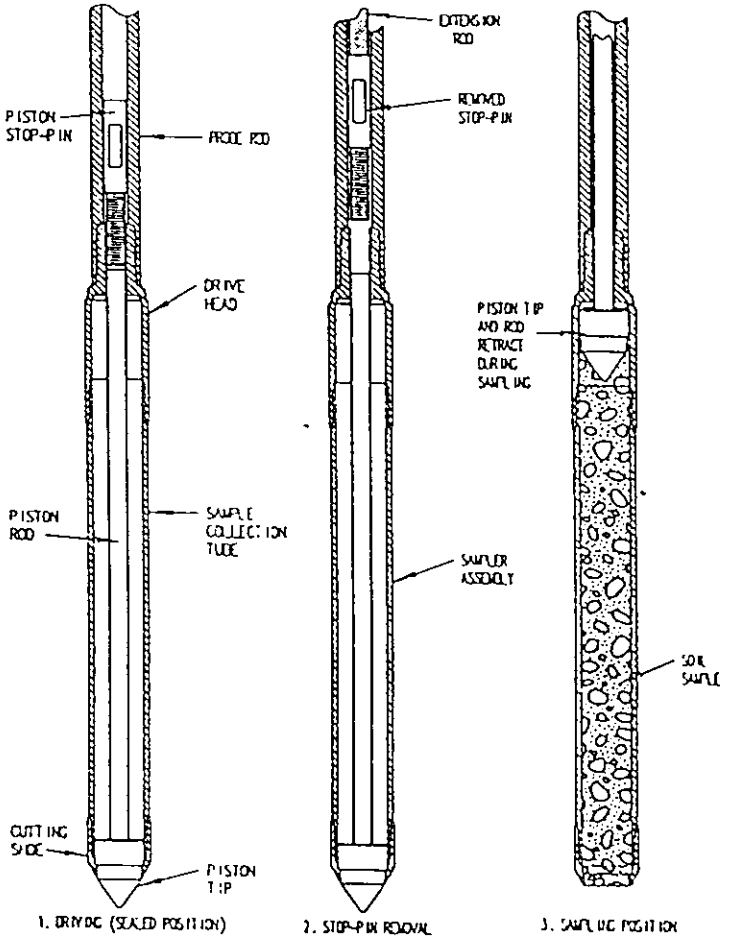

FIGURE IX. Operation of the Probe-Drive Soil Sampler

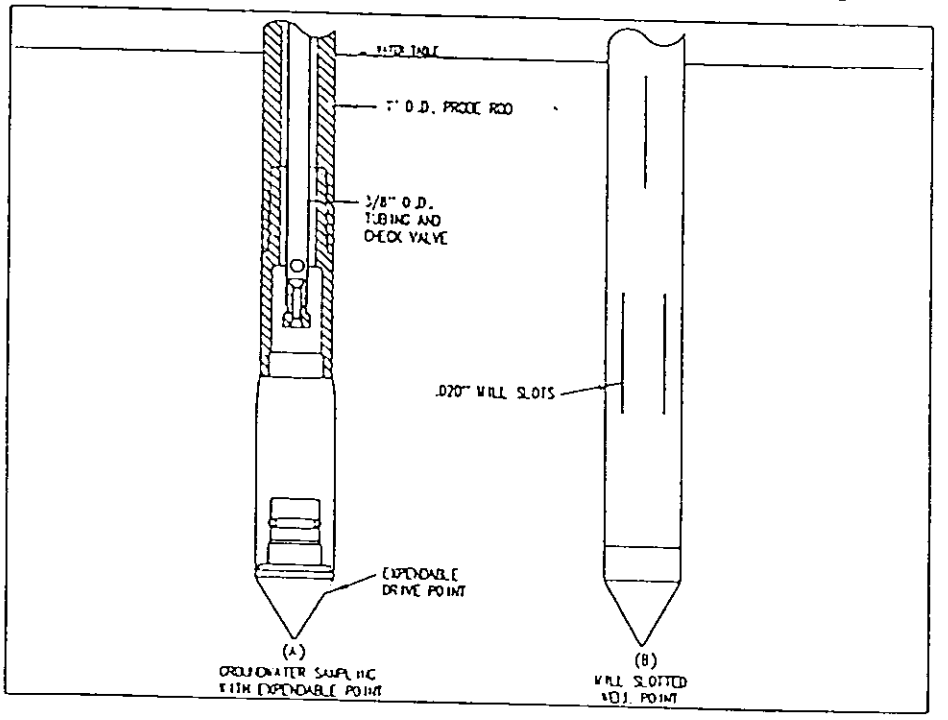

FIGURE X. Groundwater Sampling Tip Configurations

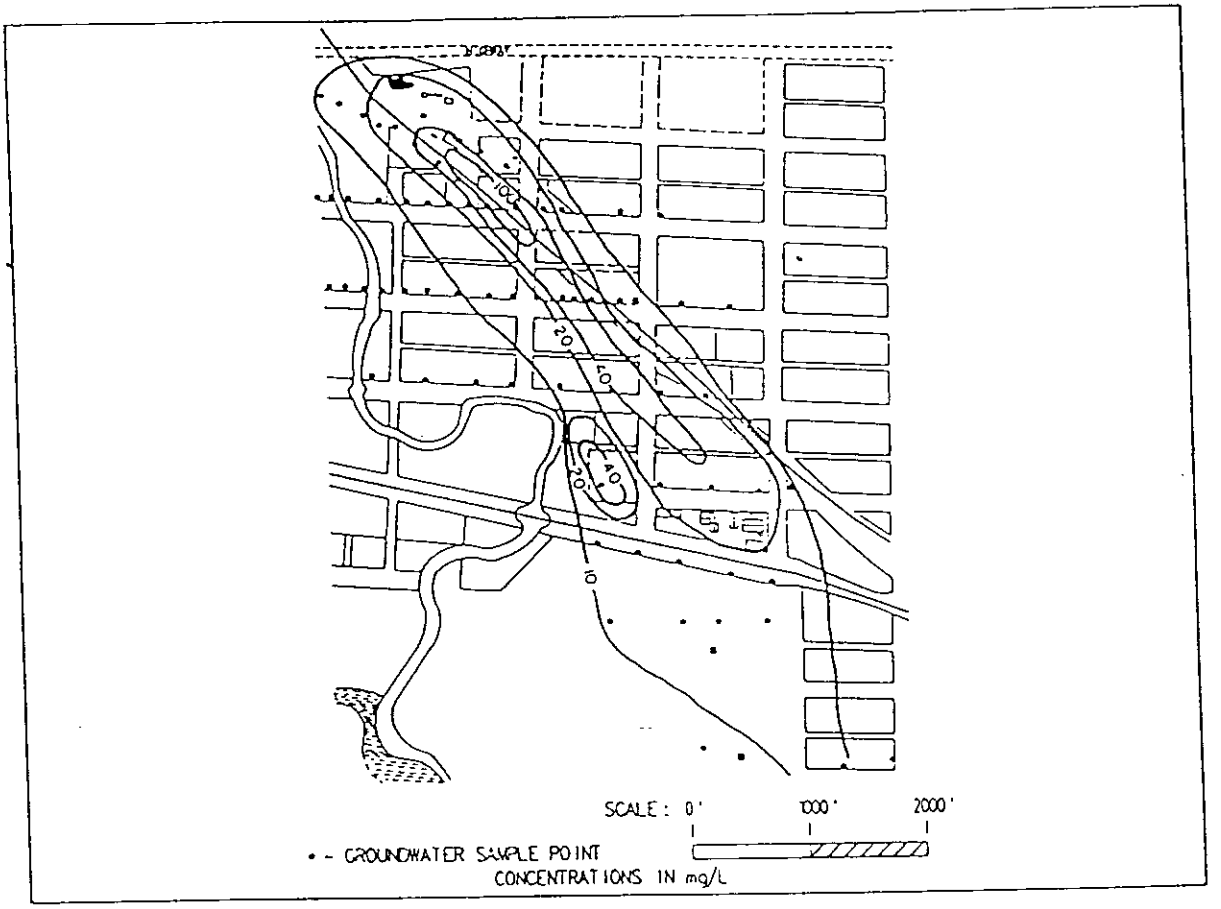

FIGURE XI. Groundwater Monitoring Using Driven Probes (Nitrate Isopleths)

Peristaltic pumps have been used successively to obtain groundwater samples using both probe configurations. It should be noted that both tools must be driven 3 to 5 ft. below the water table in order to obtain a groundwater sample.

An example of groundwater monitoring using these probes is shown in Figure XI. In this case groundwater samples were obtained for analysis of nitrates and pesticides using an expendable point arrangement. Sample depth varied with topography from 20 to 36 ft. Samplers were driven using a hydraulic probe. Encountered lithology consisted of Wisconsinian terrace deposits of clayey silts and fine sands. Approximately 500 ml of sample were recovered at each location. Up to twelve locations were sampled in a working day.

SOIL CONDUCTIVITY PROFILING

Another promising use for percussion driven soil probes is the measurement of soil conductivity profiles. Soil conductivity is the inverse of soil resistivity, a property routinely measured in environmental site investigations using surface resistivity techniques, EM surveys (apparent resistivity), or borehole geophysics.

Soil conductivity measurements with driven probes are accomplished by driving a probe equipped with a Wenner type electrode array into the ground. This application of driven probes is complicated by the need to isolate the electrodes of the measuring array from the solid shaft of the probe rods with a material that will withstand both the vibration of the percussion probe and abrasion of encountered soils.

A conductivity profile made using an experimental probe for a 48 ft. sounding in alluvial materials is shown in Figure XII. Conductivity measurements of this type demonstrate potential for utility in determining the continuity of soil layers or completing or enhancing stratigraphic information between bore holes.

SUMMARY

In the environmental field, probing can be an alternative to traditional, more intrusive, subsurface investigation methods. Unlike drilling, probing produces no cuttings, and obtain samples through probe holes only 1 to 1.5 inches in diameter. Hydraulic probing machines such as the ones discussed in this paper achieve penetration by compression and rearrangement of soil by utilizing the static force of the carrier vehicle and hydraulic percussion. Using static force alone, probes have been successfully pushed to depths of over twenty feet in some soils. By applying percussion to the static force, probes have been driven in excess of seventy feet deep.

Equipment can be rapidly mobilized to the site using an inconspicuous carrier vehicle which is usually a panel van or a pick-up truck. When equipped with the appropriate sampling tips, operators have the ability to collect soil samples, groundwater samples, and soil vapor samples using a hydraulic probing machine. Operators have reported collecting up to 15 groundwater samples, up to 30 soil samples, or up to 40 soil vapor samples in one day. Production rates are found to vary with soil conditions and the required depth of sampling. The development of small diameter probing equipment and techniques have given the environmental industry another set of tools to use in the characterization of site contamination.

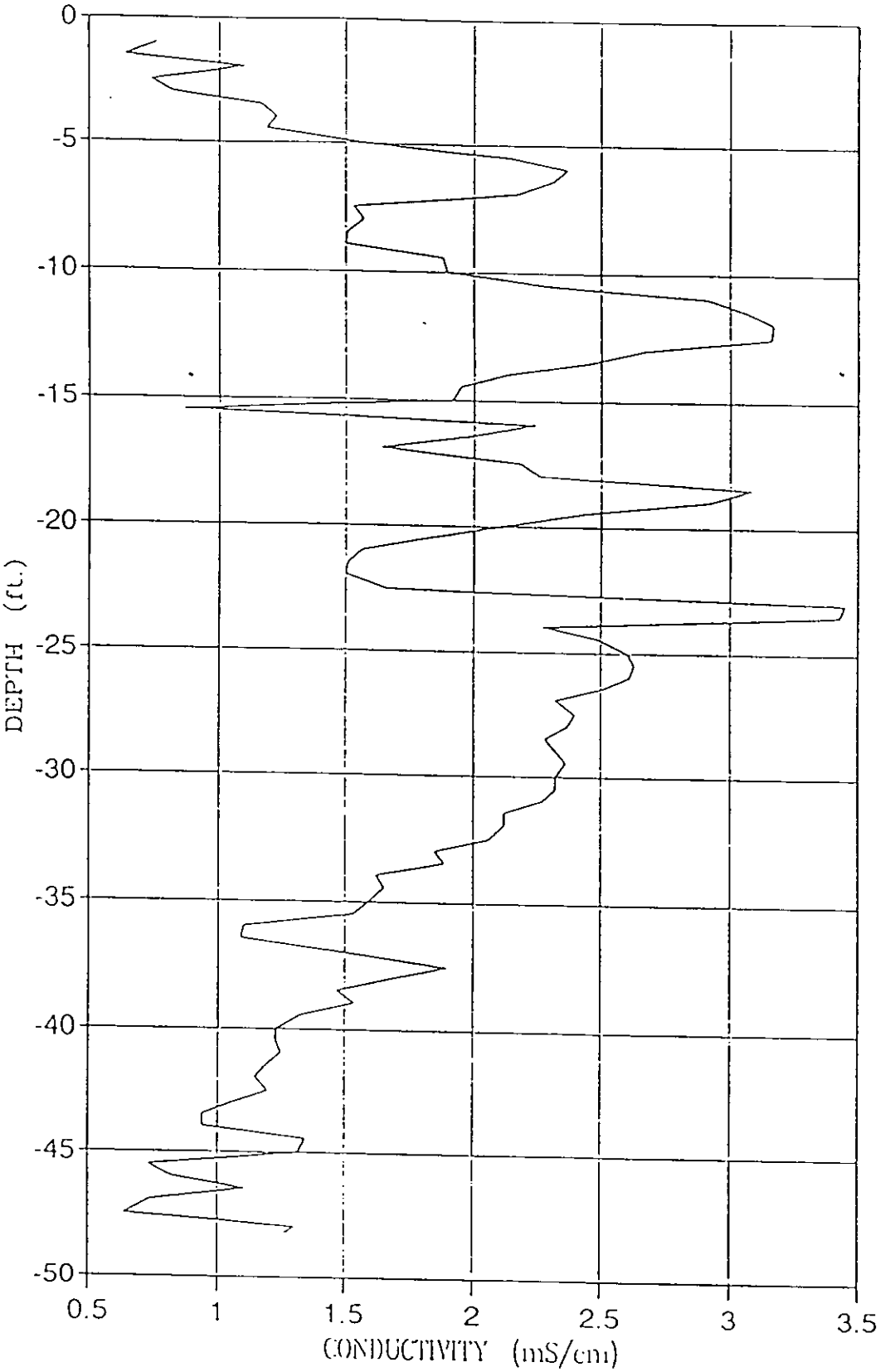

FIGURE XII. Soil Conductivity Profile

REFERENCES

Howe, J. T., and T. Gapinske, 1991, Initial Site Assessments of Soil and Groundwater Contamination With A Mobile Laboratory: Equipment Use and Strategies, Presented At: NWWA Environmental Site Assessment Conference, July 1991, Columbus, Ohio.

Joyner, Sarah, and Kurt O. Thomsen, 1990, Areal and Vertical Soil Gas Sampling Techniques Used to Locate and Characterize a VOC Source. Proceedings of the 4th National Outdoor Action Conference on Aquifer Restoration, Groundwater Monitoring and Geophysical Methods. National Water Well Association, Dublin, Ohio, pp. 235-246

Marrin, D.L. and G.M. Thompson. 1984. Remote Detection of Volatile Organic Contaminants in Groundwater Via Shallow Soil Gas Sampling. Proc. Conf. Petroleum Hydrocarbons and Organic Chemicals in Groundwater. National Water Well Association, Dublin, Ohio, pp. 172-187.

Schubring, Douglas G., 1989. Soil Gas Testing. Hazmat World, August 1989, pp 36-39.

Tillman, Ned, T.J Meyer, and Ken Ranlet. 1989. Use of Soil Gas Surveys to Enhance Monitoring Well Placement and Data Interpretation. Proceedings of Third National Outdoor Action Conference on Aquifer Restoration, Groundwater Monitoring and Geophysical Methods. National Water Well Association, Dublin, Ohio, pp.239-245.

BIOGRAPHICAL SKETCHES

Thomas M. Christy, P.E. - Mr. Christy received his B.S. in Civil Engineering from the University of Missouri - Rolla in 1980. Since that time he has conducted numerous site characterization studies for industrial and regulatory clients. In 1987, Mr. Christy co-founded Geoprobe Systems (607 Barney St., Salina, KS 67401, (913)825-1842), a manufacturer of equipment for unsaturated zone soil vapor, soil core, and groundwater sampling. He serves as Vice President and his duties include the development and testing of sampling tools and the training of clients. Mr. Christy is a Registered Professional Engineer in the State of Kansas.

Stephen C. Spradlin, Geologist - Mr. Spradlin joined Geoprobe Systems in 1990 and serves as a technical advisor training new clients in the use and application of Geoprobe equipment. Before joining Geoprobe Systems, he spent four years with Target Environmental and Exploration of Columbia, Maryland, where he assisted in subsurface investigations for environmental applications and mineral exploration. Prior to 1986, Mr. Spradlin worked for Beren Corporation in Wichita, Kansas as a staff geologist and was involved in oil exploration and regulatory compliance. Mr. Spradlin received his geology degree at Wichita State University in 1984.

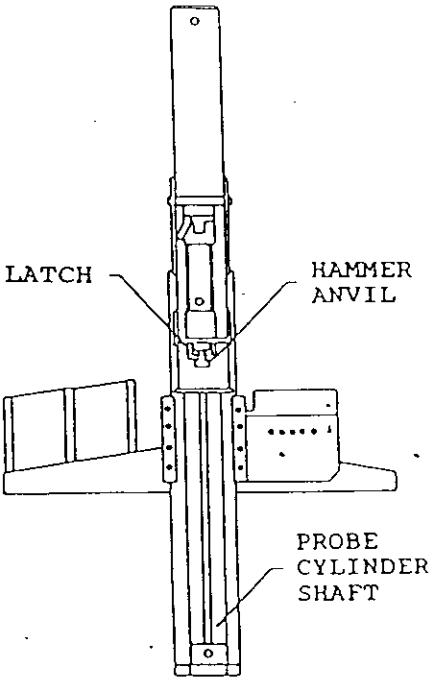

FIGURE I
INSERTING HAMMER ANVIL

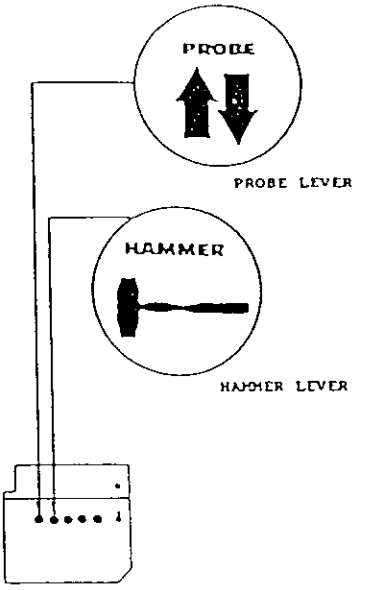

FIGURE II
CONTROL LEVERS FOR PROBING

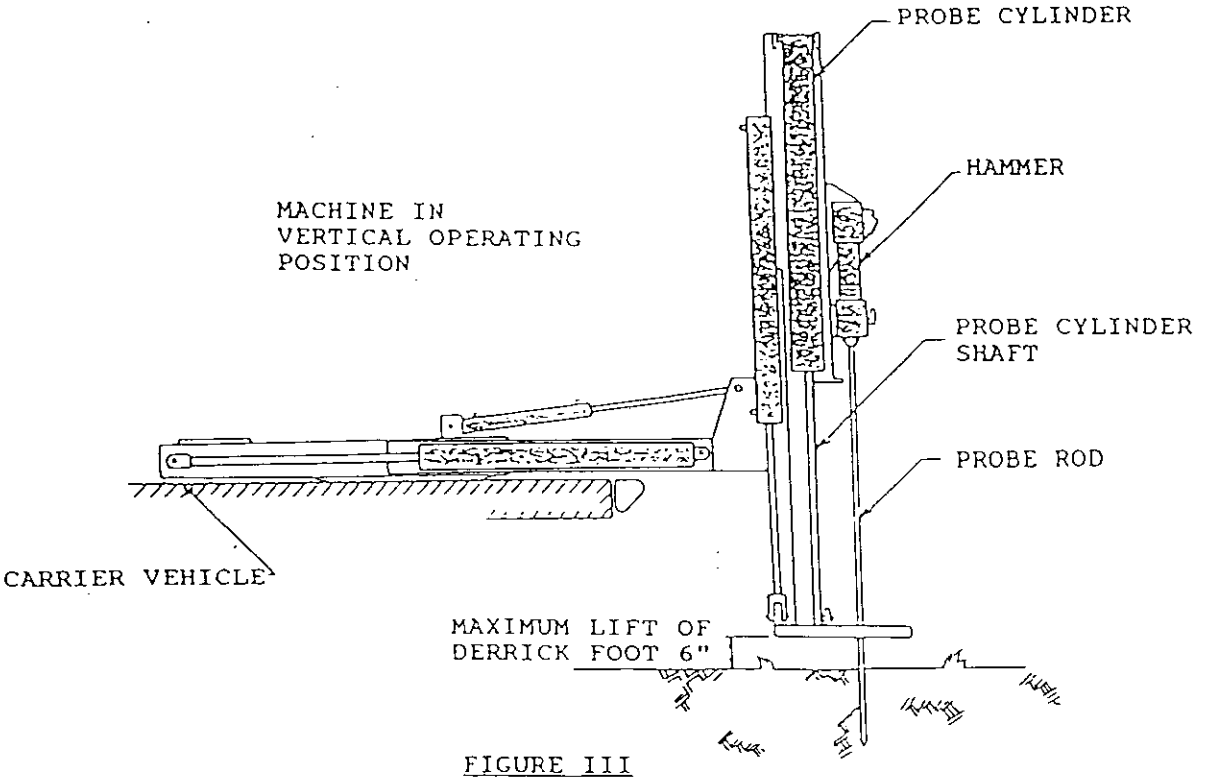

FIGURE III
PROBE CYLINDER SHAFT AND PROBE ROD SHOULD BE PARRALLEL AND VERTICAL

Geoprobe Systems
607 BARNEY ST.
SALINA, KS 67401
BUS: (913) 825-1842 FAX: (913) 825-2097

GEOPROBE AT-660 SERIES LARGE BORE SOIL SAMPLER

Standard Operating Procedure (SOP)

Technical Bulletin No. 93-660

PREPARED: 9/21/1993

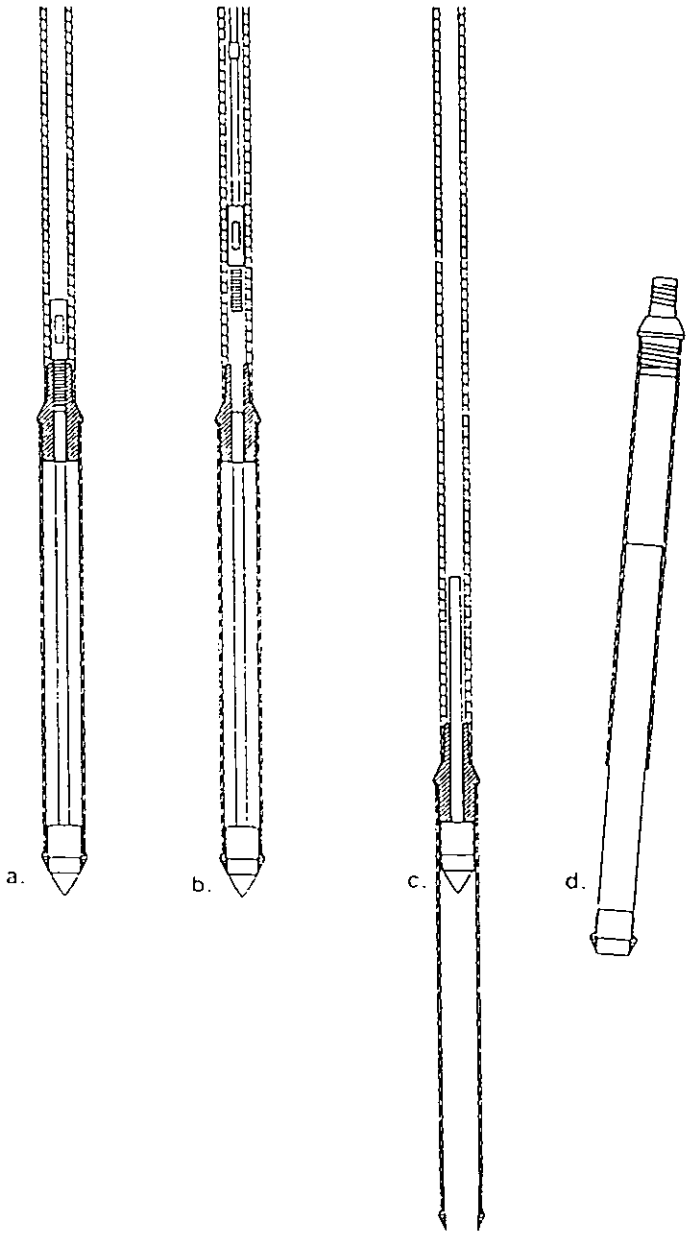

Figure 1. Driving and Sampling with the Large Bore Soil Sampler.
a. Driving the Sealed Sampler b. Removing the Stop-pin
c. Collecting a Sample d. Recovering Sample in Liner

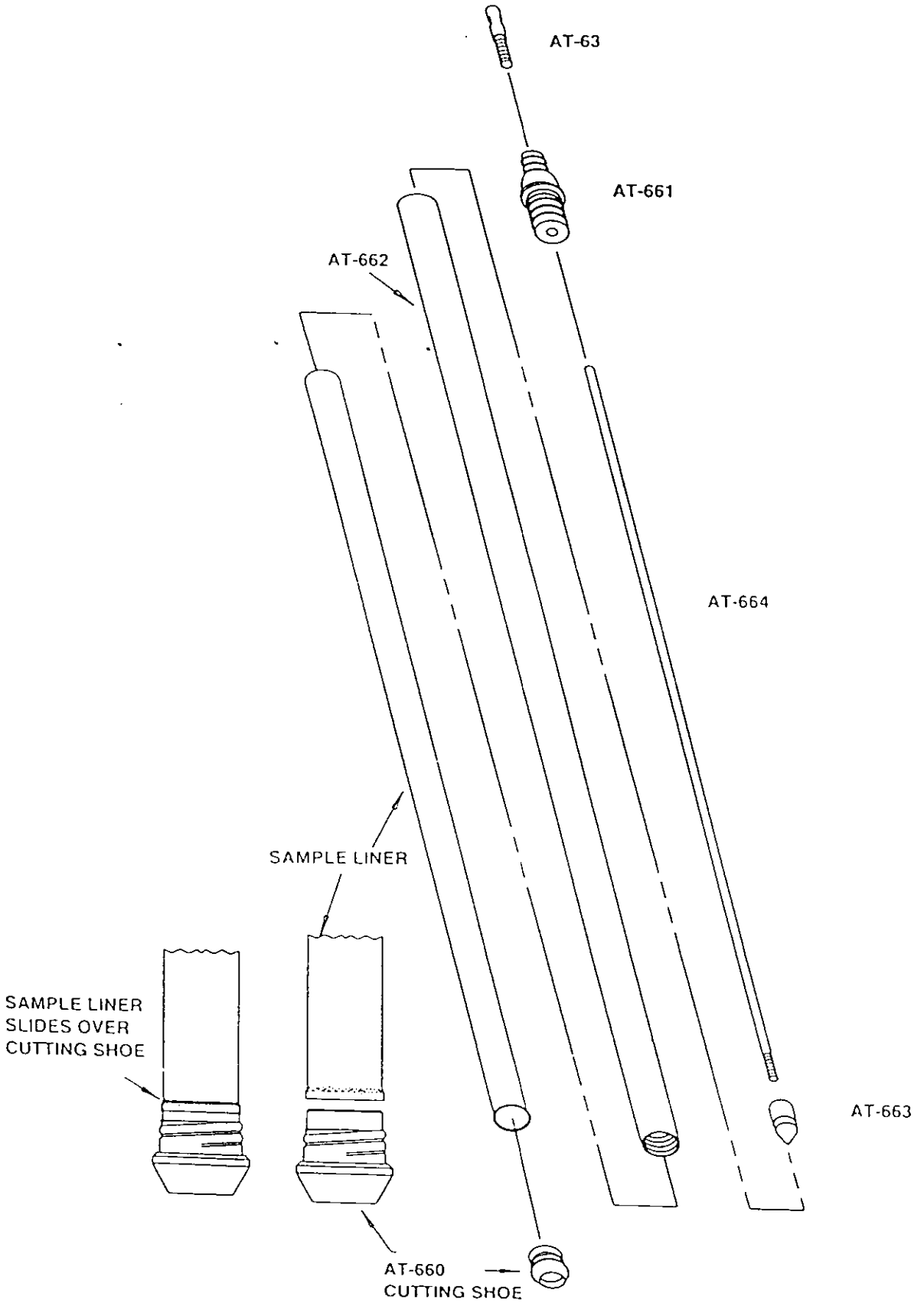

Figure 2. Large Bore Sampler Parts

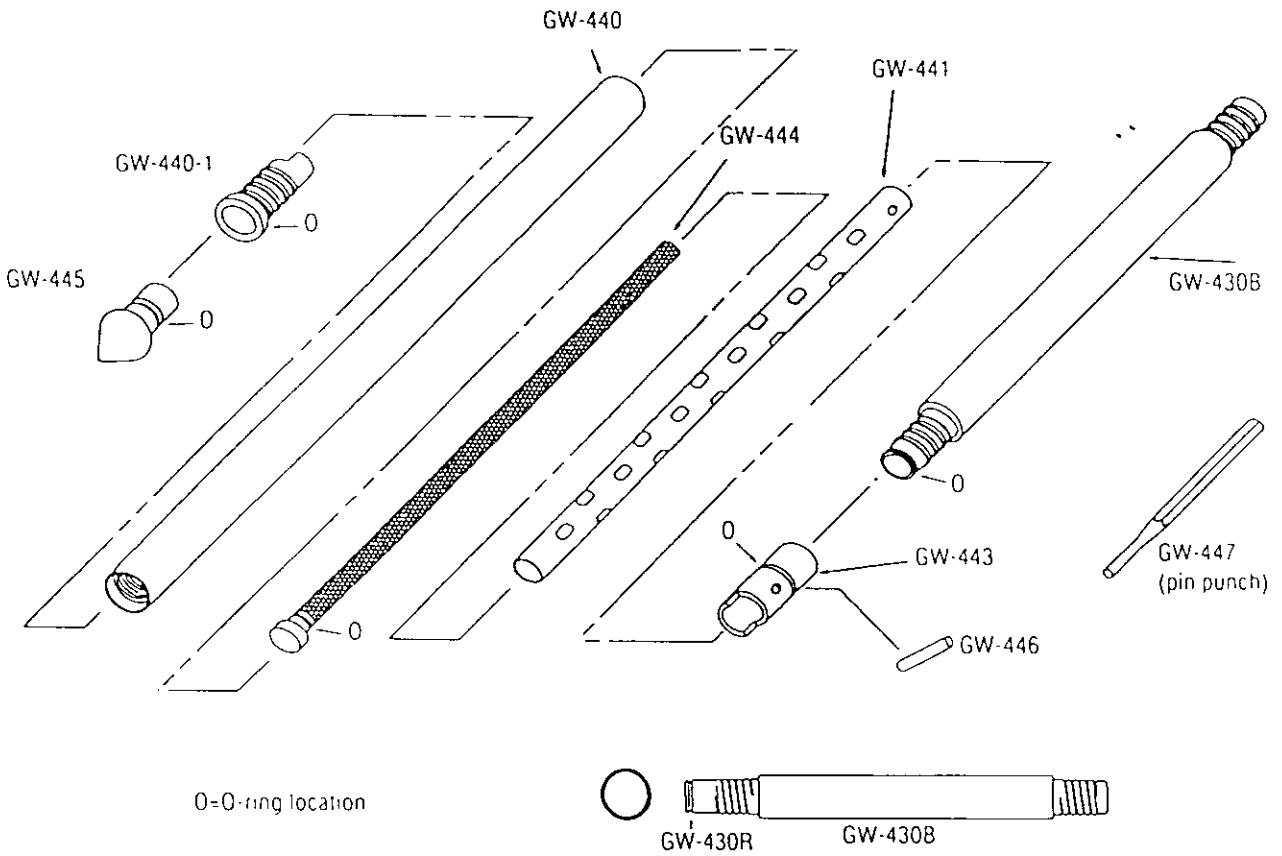

FIGURE 3.2

Screen Point Ground Water Sampler Parts
GW-440 Series

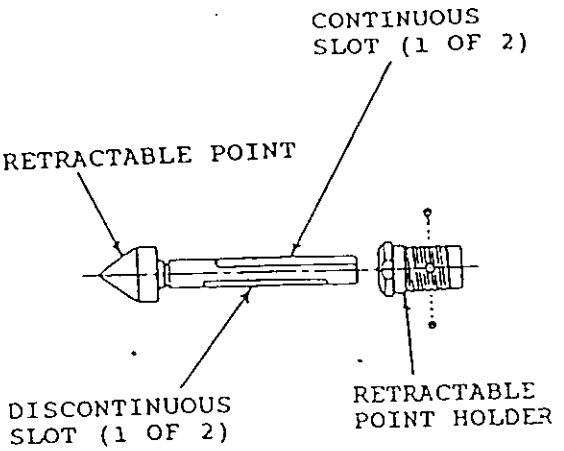

FIGURE I
DISASSEMBLED RETRACTABLE
DRIVE POINT

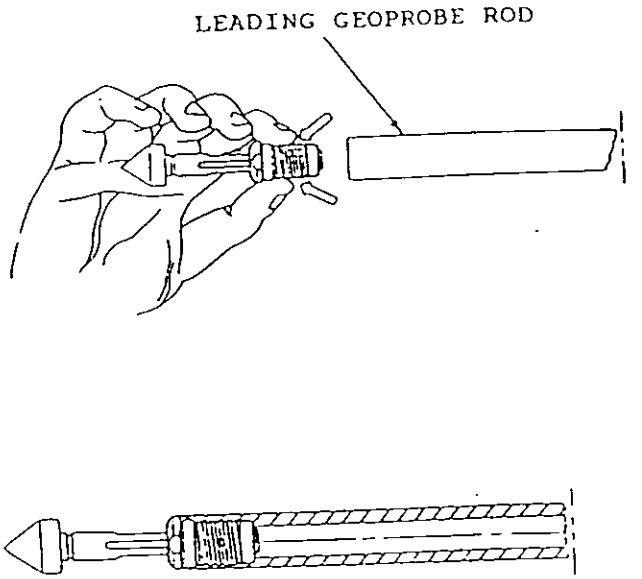

FIGURE II
ASSEMBLING RETRACTABLE DRIVE POINT

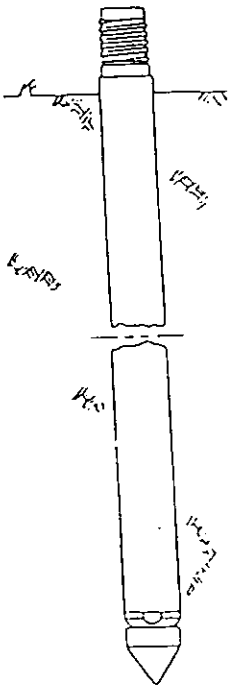

RETRACTABLE DRIVE
POINT DRIVEN TO DEPTH

FIGURE III

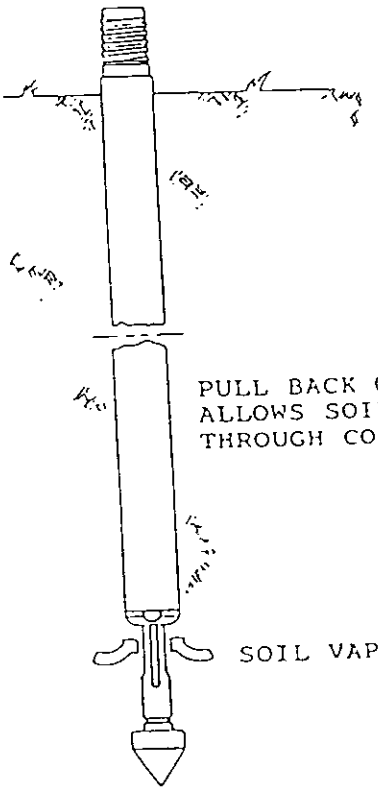

Geoprobe Systems
607 BARNEY ST.
SALINA, KS 67401
BUS: (913) 825 1842 FAX: (913) 825 200

November 7, 1994

Ms. Mary Anderson
Environmental Quality Manager
Appalachia II District
Environmental Quality Control
301 University Ridge
Suite 5800
Greenville, SC 29601

4365A

RE: Addendum to Workplan; Soil, Sediment and Groundwater Sampling; CSX/Vaughn Landfill; CSX Transportation; Greenville SC

Dear Ms. Anderson:

On behalf of Mr. Marshall Williams and CSX Transportation, AES thanks you for the opportunity to meet with you last week to discuss the proposed workplan for the collection of soil and water samples at the CSX/Vaughn Landfill on Bramlette Road in Greenville. Following is a summary of changes or additions to the workplan suggested by DHEC and AES' response:

- **DHEC** - A sample of the sludge-like material in the wetland should be collected and analysis performed to determine the composition, characteristics, and possible origin of the material

  AES - A sample of the sludge-like material will be collected from the wetland east of the landfill material. This sample will be designated WE003 and will be analyzed for TPH, VOCs, Semi-volatiles, RCRA metals, and PCBs.

- **DHEC** - Include PCB analysis for all samples collected

  AES - Agreed

- **DHEC** - Include TPH analysis for the soil and surface water samples collected in the wetlands adjacent to the landfill material. DHEC prefers a

method of TPH analysis other than 418.1

AES - TPH analysis will be performed on all soil and water samples collected in the wetlands. EPA Method 413.1 will be requested as the laboratory analytical method

- **DHEC** - Semi-volatile analysis is not necessary for all samples collected from the landfill but should be included in analyses of the wetland soil and water samples

  AES - Semi-volatile analysis will be performed on those samples collected from the wetland sediments and waters.

- **DHEC** - At least two soil samples should be collected in the wetland at the south end of the landfill to assess horizontal extent

  AES - Two samples will be collected from the soils in the wetland south of the landfill material. Those samples will be designated WS001 and WS002 and will be analyzed for TPH, VOCs, Semi-volatiles, RCRA metals, and PCBs.

Table 1 summarizes the sample IDs including the additional samples to be collected, the sample type (soil or water), and the analyses to be performed on each sample. **Figure 1** indicates the location of each sample to be collected except those sediment samples to be collected in the wetlands. Wetland sediment samples will be collected based on field observations and screening during field operations. The actual location of sediment sample collection points will be noted on a scaled drawing to be included in a report of findings to DHEC.

As noted in Table 1, AES proposes to field screen those soil samples collected from the landfill for Volatile Organics using a photoionization device or other field screening device. Only those samples testing positive will be analyzed in the laboratory for VOCs. RCRA metals and PCB analysis will be performed on all landfill soil samples. Landfill groundwater samples will be analyzed for VOCs, RCRA metals, and PCBs. All wetland samples collected will be analyzed by the laboratory for VOCs as well as the other parameters noted in Table 1.

The original workplan stated that groundwater samples would be collected at all thirty three sample locations in the landfill. After further consideration, AES feels that this is unnecessary and proposes to collect groundwater samples from seven locations as designated on Figure 1. In this preliminary investigation, these seven locations should be adequate to assess impact to groundwater from the landfilling activities.

Thank you for your consideration of this addendum. If you have any questions, please call me at (404) 454-1810.

Sincerely,

Dave Butler
Project Manager

Enclosures

cc: Marshall Williams/CSX
Charles Bristow/DHEC

csx\s-caroli\gnvle\vaughn.lf\wkplan.add

C

Notes

APPENDIX C

DHEC CORRESPONDENCE

South Carolina
DHEC
Department of Health and Environmental Control

Appalachia II
Environmental Quality Control
301 University Ridge, Suite 5800
Greenville, SC 29601-3677
803-241-1090 Fax: 803-241-1092

Serving
Greenville and Pickens Counties

Promoting Health, Protecting the Environment

May 11, 1995

Mr. Marshall Williams
CSX Railroad
6737 Southpoint Drive South
Suite 100
Jacksonville, FL 32216

Re: Vaughn Landfill/CSX Real Property
Bramlette Road Property
Greenville County

Dear Mr. Williams:

Our office has received and reviewed your consultant's report on the above referenced site (Applied Engineering & Science, Site Investigation, March, 1995). We appreciate your expedient assessment and hope to facilitate continued investigation at the site.

After reviewing the Site Investigation we agree that further assessment at the site is necessary. The information gathered to date suggests that soils and groundwater at the site are being impacted by the tar substance identified at the site. Please prepare a Work Plan that will provide the information necessary to determine if remedial action is necessary at the site and if so, what form should it take. The work plan should provide for flexibility to be modified as the assessment proceeds.

Objectives for this workplan should include:

1) Determine the extent of the tar substance.
2) Determine the source of the tar substance.
3) Determine the vertical and horizontal extent of groundwater contamination.
4) Determine pathways of contamination migration to possible receptors.
5) Assess location LF024 for the source of heavy metals contamination.
6) Develop a site characterization including soils, geology, hydrology, and hydrogeology.

This workplan should be submitted to this office within 30 days of receiving this letter. If a problem meeting this timeframe develops, or if you have any questions, please contact me at (803) 241-1090.

Sincerely,

Charles Bristow
Appalachia II EQC

South Carolina
DHEC
Department of Health and Environmental Control

Appalachia II
Environmental Quality Control
301 University Ridge, Suite 5800
Greenville, SC 29601-3677
803-241-1090 Fax: 803-241-1092

Serving
Greenville and Pickens Counties

Promoting Health, Protecting the Environment

November 21, 1995

Mr. Dave Butler
Applied Engineering & Science
2261 Perimeter Park Drive, Suite 1
Atlanta, GA 30341

Re: Worklan for CSX/Vaughn Landfill dated August 1995

Dear Mr. Butler:

This office has reviewed the referenced workplan, and it is approved with the following comments.

(1) When the Tar Substance delineation work is performed north of Bramlette Road, groundwater sampling should be integrated with the soil sampling. Data collected could be used to help establish if permanent groundwater monitoring wells are needed in that area.

(2) The workplan is general in nature to allow flexabibility during the assessment. During implementation of the field work, this office should be kept updated with specific information concerning the assessment. For example, what methods will be employed to determine contaminant migration off-site in the Section, Contaminant Pathways.

Attached is a monitoring well approval, which will also cover any GeoProbe or temporary monitoring well installation at the site. Please note that the conditions are a part of the well approval.

If you have any questions please contact me at (803) 241-1090.

Sincerely,

Charles Bristow, Hydrogeologist
Appalachia II EQC

South Carolina
DHEC
Department of Health and Environmental Control

Counties

Appalachia II
Environmental Quality Control

301 University Ridge, Suite 5800
Greenville, SC 29601-3677
803-241-1090 Fax: 803-241-1092

Serving
Greenville and Pickens

Promoting Health, Protecting the Environment

MONITORING WELL APPROVAL

Approval is hereby granted to: Mr. Dave Butler
Applied Engineering & Science
2261 Perimeter Park Drive, Suite 1
Atlanta, GA 30341

Location: CSX/Vaughn Landfill

Greenville, South Carolina

For the construction of at least six monitoring wells in accordance with the location, construction plans and specifications described in the August Workplan except as revised by the conditions listed below. The wells (except MW-3D) will be installed to bracket the upper saturated surface of the surficial aquifer for the purpose of assessing the ground water quality at the referenced site. Well MW-3D will be screened below a clay unit, or at a depth of 30 feet, whichever is encountered first.

If necessary, temporary wells or a GeoProbe will be used to screen for contamination north of Bramlett Road. The wells should be abandoned in less than 48 hours, or up-graded to permanent wells. The boreholes should be grouted from total depth, to the ground surface during abandonment.

Conditions:

1) The latitude, longitude and actual construction details will be

submitted to the Department within 30 days from completion of the field work.

2) All water quality measurements and analytical data obtained from the wells will be submitted to the department within 30 days upon receipt from the laboratory.

3) All wells construction must be performed by a South Carolina certified well driller.

4) Well construction and sampling derived waste including, but not necessarily limited to, drill cuttings, drilling fluids, development and purge water should be managed properly and in compliance with applicable requirements. If containerized, each vessel should be clearly labeled with regard to contents, source, and date of activity

5) Charles Bristow, in the Appalachia II District Office, should be notified a minimum of 48 hours prior to initiating field activities.

This well approval is pursuant to the provisions of Section 44-55-40 of the 1976 South Carolina Code of Laws and the Department of Health and Environmental Control's Regulations R.61-71. It is valid up to sixty days after the date of issue.

Date of Issue: 11-21-95

Charles Bristow

Charles Bristow
Hydrogeologist
Appalachia II EQC

cc. Jim Hess, Manager, Assessment & Development, GWPD

South Carolina
DHEC
Department of Health and Environmental Control

Charles, [illegible] back

Dave B ?

WW + SHW

RECEIVED
FEB 20 1996

M E M O R A N D U M

To: Charles Bristow, Hydrogeologist
Appalachia II District EQC

From: Tom Knight, PG, Manager
Geohydrologic Section
Water Quality Assessment and Enforcement Division

Date: February 5, 1996

Re: CSXT (Bramlette Rd. Site)
Assessment Report (3/95)
Assessment Proposal (8/95)
Greenville County

The reference submittals have been reviewed and I agree with the recommendations. The following comments are provided for your consideration:

Assessment Report

- The proposed actions for the landfill should be implemented unless additional actions are necessary for the tar substance.

1. → - The source of the methylene chloride needs to be identified.

Proposal

- I agreed with the proposed assessment.

- I recommend that the approval of the monitoring wells be open ended so that CSXT can define the upgradient source area(s). Source determination/characterization should be a high priority.

- The vertical extent assessment should extend into the transition zone due do its potential hydraulic characteristics (i.e. potentially greater permeability that the saprolite).

2 → - In potential source areas associated with the Coal Gasification Plant residuals (and possibly handling areas), I recommend that the groundwater be evaluated for the potential presence of DNAPL comprised of creosote.

3 → - Cover should be established for the landfill as soon as is feasible.

- Due to the presence of gypsum board in the landfill debris, groundwater should be sampled for sulfate.

- I recommend that MW-2 be moved into the area of free product hydrocarbons.

- In evaluating exposure pathways, any potential toxic effects to biota, including in the wetland areas should be evaluated.

If you have any questions, please contact me at (803) 734-5227.

cc: Doug Johns

D

Notes

APPENDIX D

PHASE II WORKPLAN

WORKPLAN

SITE INVESTIGATION AND MONITORING WELL INSTALLATIONS

CSX/VAUGHN LANDFILL

CSX TRANSPORTATION

Greenville, SC

August 1995

WORKPLAN

SITE INVESTIGATION AND MONITORING WELL INSTALLATIONS

CSX/VAUGHN LANDFILL

CSX Transportation
Greenville, South Carolina
August, 1995

APPLIED ENGINEERING & SCIENCE, INC.

Atlanta, Georgia

TABLE OF CONTENTS

I. INTRODUCTION

Applied Engineering and Science, Inc. (AES), on behalf of CSX Transportation, Inc. (CSXT), submitted to the South Carolina Department of Health and Environmental Control (SCDHEC) a report entitled Site Investigation; Soil, Sediment, and Groundwater Sampling; Vaughn Landfill, CSX Real Property in March 1995. The report included background information and results of a site investigation conducted in February 1995 by AES on CSXT property located on Bramlette Road in Greenville. The site had been used as an unpermitted landfill by Vaughn Construction and Demolition Company of Greenville. The results and recommendations of the report are summarized below.

"Approximately seven acres of floodplain of the Reedy River have been filled with demolition debris and yard waste to a depth of up to 14 feet. Excavations through the fill and borings advanced through the fill into the underlying native soils revealed the presence of a tar-like substance at the fill/soil interface. Additional hand auger samples collected in the surrounding floodplain soils also contained tars.

Laboratory analysis of the samples indicated a band of volatile and semi-volatile contamination in soils trending northeast to southwest through the fill. This band extends from the floodplain northeast of the fill through the northern half of the fill material, through the southwest corner of the fill, and into the floodplain southwest of the landfill.

Groundwater was encountered at or below the native soil surface. Three groundwater samples contained elevated levels of volatile and semi-volatile compounds. Impacted groundwater was found along the west side of the landfill and likely extends west in the suspected downgradient direction toward the Reedy River.

Elevated levels of lead were revealed in soil samples throughout the site. Metals levels in sample LF024 were especially high. Groundwater metals levels were below MCLs except for arsenic slightly over MCLs in one sample and lead slightly over MCLs in two samples. Several surface water samples contained metals levels which slightly exceeded MCLs.

No source of metals, VOC, or semi-VOC contamination was identified in the landfill materials. Volatile and semi-volatile compounds appear to be the result of the tar-like substance which lies in native soils below the fill. No source for the tars was found; however, a coal gasification plant operated across Bramlette road northeast of the site until the 1960s. Semi-volatile compounds identified during the landfill investigation are consistent with those produced during coal gasification processes.

AES recommends the installation of monitoring wells to assess the vertical and horizontal extent of groundwater contamination. A minimum of six wells is recommended.

Additional soil sampling should be conducted to assess the extent of the tar substance and to assess a possible source.

Location LF024 should be excavated to assess the source of heavy metals contamination at that location.

The south end of the landfill should be covered with clean soil to control odors and vermin, to keep debris from blowing away, and to improve appearances. An impermeable cap is not recommended for this landfill. Because the water table is at or close to the surface, water flows beneath and through the base of the fill. A cap would not prevent this type of infiltration."

In a letter to CSXT dated May 11, 1995, DHEC responded to the above referenced report and requested a workplan be submitted for further assessment at the site (DHEC letter, Appendix A). The letter requests further information on the following:

1) The extent of the tar substance
2) The source of the tar substance
3) The vertical and horizontal extent of groundwater contamination
4) Pathways of contaminant migration to possible receptors
5) The source of heavy metals contamination at location LF024

6) A site characterization including soils, geology, hydrology, and hydrogeology

This workplan has been prepared to address the concerns listed above and will outline proposed methods, expected results, and a schedule of events.

II. FIELD ACTIVITIES

Proposed field activities have been divided into six separate tasks which address the concerns raised by DHEC.

A. Extent of the Tar Substance

The tar-like substance identified during the initial investigation appeared to lie within the natural surface soils below the landfill materials and in parts of the floodplain adjacent to the fill.

East of the fill material, the substance was present in sample WE001 but was absent in sample WE002. Several hand auger samples will be collected in the area of WE001 and field screened both visually and with an organic vapor analyzer (FID, etc.). Once it appears the limits of the tar substance have been identified, confirmatory samples will be collected and analyzed by a laboratory for volatile and semi-volatile content.

West of the fill material, the substance was present in soil sample WW002, but was absent in both samples WW001 and DD002. As on the east side of the fill, hand auger samples will be collected and field screening performed to assess the limits of the tar-like substance.

South of the fill, no tar-like substance was noted in samples WS001 or WS002. No further sampling is planned for this area.

Because of the likelihood that the tar substance originated at the coal gasification plant north of Bramlette Road, several samples will be collected directly across the road from the landfill to assess the limits of the tar in that direction. The area has been filled since the plant ceased operations; therefore, the samples will be collected by either push-type technology (Geoprobe) or a standard drill rig equipped with split spoons to reach native soils.

B. Source of the Tar Substance

Interviews with several area residents, aerial photos from the 1950s, and past investigations indicate the former coal gasification plant at the corner of West Washington Street and Bramlette Road as the probable source of the tar substance on the site. Additional samples collected north of Bramlette Road during the next phase of the investigation may add further evidence for this possibility. Other possibilities for the source of the contamination will be considered and investigated.

C. Vertical and Horizontal Extent of Groundwater Contamination

Groundwater samples collected during the first investigation indicated an oily substance in the groundwater around sample location LF023. BTEX compounds and several PAHs were identified in groundwater samples LF023(A), LF025(A), and LF027(A) (trace amounts of ethylbenzene and xylenes were also identified in LF031(A)).

AES proposes to install six (6) monitoring wells to assess vertical and horizontal extent of groundwater contamination. Figure 1 is a site plan which includes the proposed well locations. The rationale for the proposed locations is as follows:

MW-1 - To be installed at the northeast corner of the landfill site along Bramlette Road, MW-1 will be used to assess groundwater quality in the suspected upgradient direction. The well will be installed within the surficial aquifer and will be screened across the water table. The water table is expected to lie within 10 feet of the surface.

MW-2 - Installed at the northwest corner of CSXT property adjacent to the CSX railroad office, MW-2 will be used to assess groundwater quality in the suspected downgradient direction of the landfill. This well will also be installed in the surficial aquifer and will be screened across the water table.

MW-3D - To be installed in the landfill in the area of LF025, MW-3D will be used to assess groundwater quality vertically. Native soils directly below the landfill materials consist of dense clay of varying thickness. Below the clay lies fairly uniform sands. MW-3D will be installed in the sand aquifer at the next confining unit or at 30 feet, whichever is encountered first. Continuous split-spoon sampling will be performed to determine the stratigraphy of the borehole. The surficial clay unit will be cased to prohibit the migration of contaminants to the sand unit through the borehole.

MW-4 - To be installed east of the landfill at the east side of CSXT property, MW-4 will be used to assess groundwater quality in the suspected upgradient direction. The well will be installed in the surficial aquifer and will be screened across the water table. Laboratory analysis of groundwater samples LF001(A) and LF003(A) indicated no volatile or semi-volatile compounds present. The sample from MW-4 will be used to confirm the initial findings. It is possible that a temporary access road will need to be constructed to reach this well location.

MW-5 - MW-5 will be installed west of the fill material at the west edge of the CSXT property adjacent to the rail lines. The well will be installed in the surficial aquifer and will be screened across the water table. A sample will be used to

assess groundwater quality in the suspected downgradient direction from the landfill in line with LF029(A).

MW-6 - The location of MW-6 is tentative and depends on the results of further soil sampling and the extent of the tar substance. The actual location may be further south in the floodplain or along the rail bed. The water sample collected from this well will be used to attempt to determine the horizontal extent of groundwater contamination in the southerly direction.

All monitoring wells will be installed by a South Carolina certified driller and will be constructed in accordance with the guidelines set forth in the document South Carolina Well Standards and Regulations, enacted June 2, 1985. The wells will be labeled with permanent identification plates indicating the date of installation, driller, top-of-casing elevation, total depth, screened interval, and static water level. The wells will be constructed of 2-inch Schedule 40 PVC casing and screen. Slot size of the screens will be 0.010 inch. It is expected that all wells will be constructed with casings extending above the ground surface and will be completed with steel enclosures with locking caps. If necessary, flush mount manhole covers will be used in areas of high traffic volume (adjacent to the CSX office). General well construction diagrams are included as Appendix B. Specific well construction diagrams and boring logs will be submitted for all wells following construction.

Following completion, the wells will be developed according to R.61.71.6-D to ensure sample collection of groundwater typical of the aquifer. Turbidity, pH, and specific conductance will be used as parameters to assess development.

Groundwater samples will be collected within 24 hours of development using clean disposable bailers. Samples will be analyzed for volatile and semi-volatile constituents (EPA methods 8260 and 8270). A laboratory certified in South Carolina will be chosen to perform the analyses.

The methods to be utilized in collecting the samples for this study will strictly adhere to the EPA Region IV Standard Operating Precedures and Quality Assurance Manual, issued Feburary 1, 1991. The standard operating procedures utilized by AES personnel in all sampling activities follow a standardized QA/QC procedure. The procedures are documented in the AES Field Operations Manual. Health and safety procedures will be reviewed each day before operations commence particularly those specified by CSX Transportation for all contractors on railroad property.

D. Contaminant Pathways

Included in this portion of the investigation will be an assessment of groundwater contamination and a characterization of the hydrogeology of the site to assess possible

contaminant migration off-site. The possibility of surface migration of contaminants in runoff into the Reedy River will also be evaluated. Downstream surface water users and groundwater supply users will be identified. A well survey was conducted previously in the area and that information will be included. The potential impact of volatile contaminants on air quality will also be addressed. The information provided may be used to determine appropriate remedial actions if necessary.

E. Location LF024; Metals

Barium, cadmium, chromium, and lead concentrations at sample location LF024 were higher than other levels in samples collected within the landfill. That location will be excavated with a backhoe to attempt to identify the source of the heavy metals. All fill materials within a radius of ten feet of LF024 will be screened. Additional samples may be collected to confirm the previous findings. Information provided will be used to determine the need for and type of remediation at that location.

F. Site Characterization

A site characterization will be developed which includes soils, geology, hydrology, and hydrogeology. Information will be collected from site visits, previous investigations, well installations, state and federal publications, maps, and aerial photographs. Human

activities on the site will be reviewed. This information will provide an overview of the site and a basis for future risk-based assessments.

III. SCHEDULE OF EVENTS

Following approval of this workplan by DHEC, AES will begin preparations for field activities. The scheduling of well drillers, the Geoprobe, a backhoe, and a South Carolina certified laboratory must be coordinated. AES estimates three weeks preparation time. The completion of field activities may require another two and one-half to three weeks. Once laboratory results are received and the data reviewed, an estimated thirty days will be required for graphics and report preparation and review. Given these estimates, a completed report may be submitted to DHEC approximately thirteen (13) weeks following approval of the workplan.

APPENDIX A

SCDHEC LETTER TO CSX

South Carolina
DHEC
Department of Health and Environmental Control

Appalachia II
Environmental Quality Control
301 University Ridge, Suite 5800
Greenville, SC 29601-3677
803-241-1090 Fax 803-241-1092

Serving
Greenville and Pickens Counties

Promoting Health, Protecting the Environment

May 11, 1995

Mr. Marshall Williams
CSX Railroad
6737 Southpoint Drive South
Suite 100
Jacksonville, FL 32216

Re: Vaughn Landfill/CSX Real Property
Bramlette Road Property
Greenville County

Dear Mr. Williams:

Our office has received and reviewed your consultant's report on the above referenced site (Applied Engineering & Science, Site Investigation, March, 1995). We appreciate your expedient assessment and hope to facilitate continued investigation at the site.

After reviewing the Site Investigation we agree that further assessment at the site is necessary. The information gathered to date suggests that soils and groundwater at the site are being impacted by the tar substance identified at the site. Please prepare a Work Plan that will provide the information necessary to determine if remedial action is necessary at the site and if so, what form should it take. The work plan should provide for flexibility to be modified as the assessment proceeds.

Objectives for this workplan should include:

1) Determine the extent of the tar substance.
2) Determine the source of the tar substance.
3) Determine the vertical and horizontal extent of groundwater contamination.
4) Determine pathways of contamination migration to possible receptors.
5) Assess location LF024 for the source of heavy metals contamination.
6) Develop a site characterization including soils, geology, hydrology, and hydrogeology.

This workplan should be submitted to this office within 30 days of receiving this letter. If a problem meeting this timeframe develops, or if you have any questions, please contact me at (803) 241-1090.

Sincerely,

Charles Bristow

Charles Bristow
Appalachia II EQC

APPENDIX B

WELL DIAGRAMS

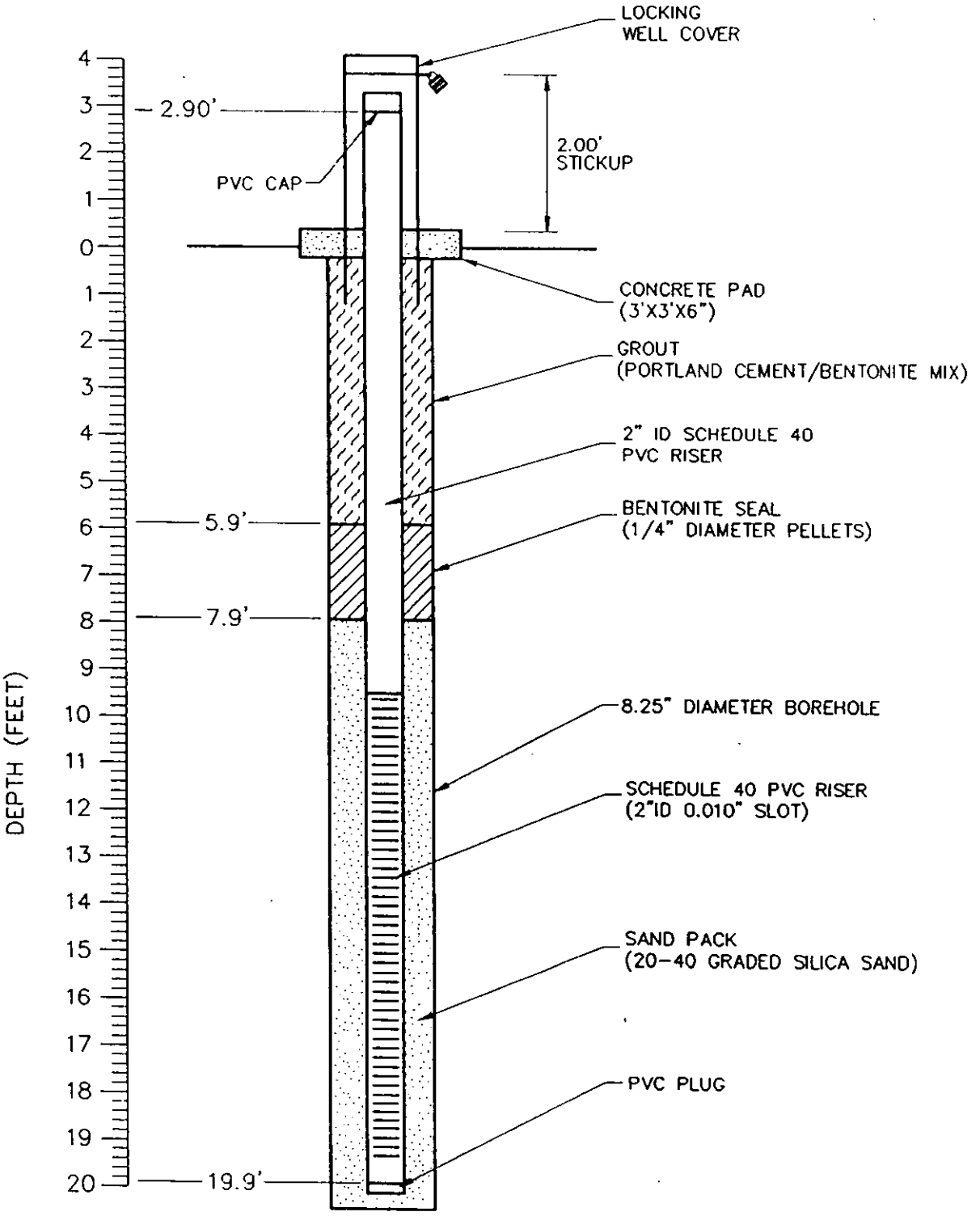

FIGURE 4

SCALE NTS	Applied Engineering & Science	GENERAL WELL CONSTRUCTION DIAGRAM	DATE DEC, 1992
DWN. BY BAA			DWG. NO. 2278 A
CHK'D. BY SM			SHEET NO.
APPR. BY JM			

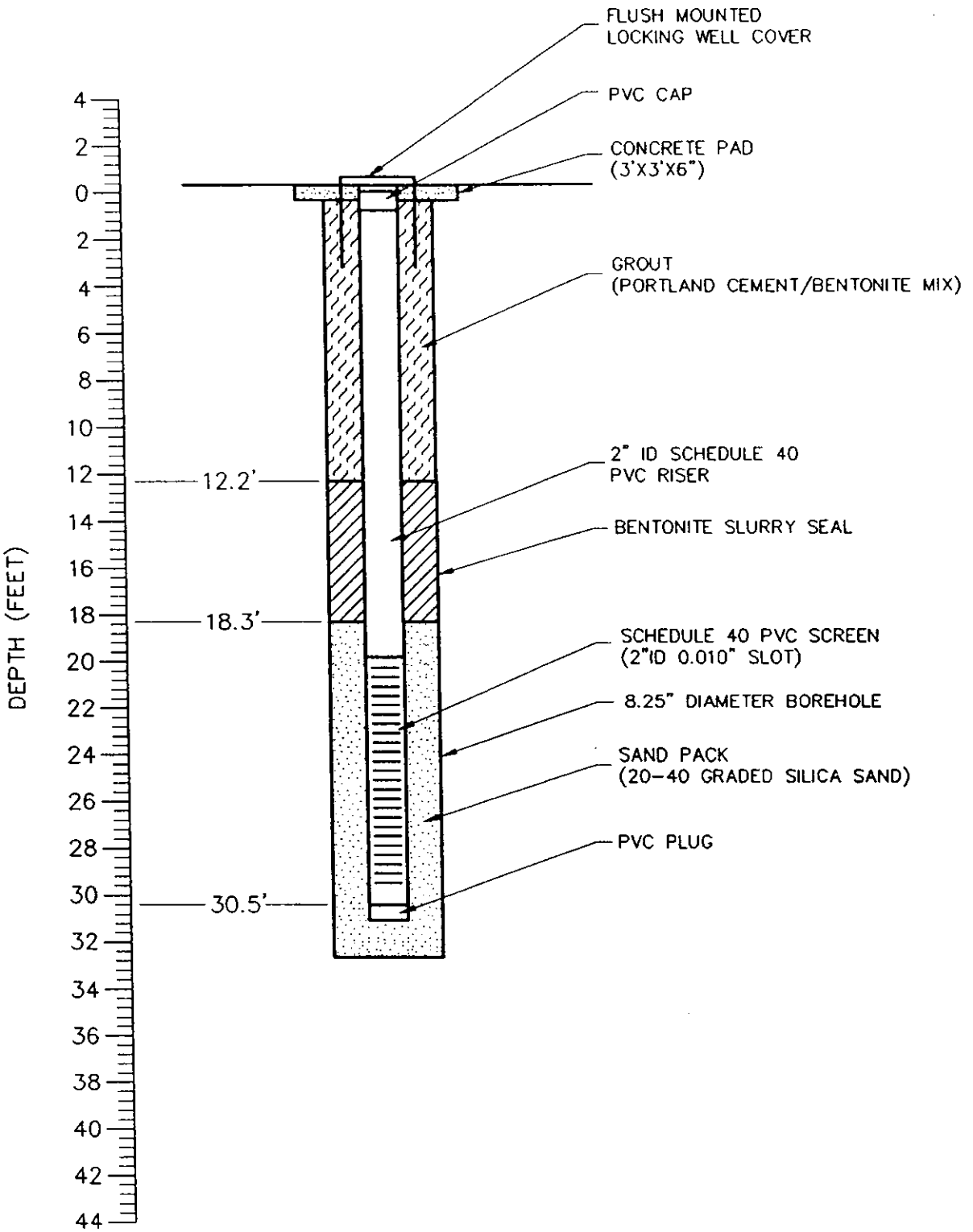

FIGURE 5

SCALE NTS	Applied Engineering & Science	GENERAL WELL CONSTRUCTION DIAGRAM	DATE DEC, 1992
DWN. BY BAA			DWG. NO. 2278 A.
CHK'D. BY SM			SHEET NO.
APPR. BY JM			

E

Notes

APPENDIX E

PHOTOGRAPHS

Photograph 1
Ditch Entrance at West Washington St NE; DP Site

Photograph 2
Ditch, NE; DP Site

Photograph 3
Unvegetated Area; View West From East Gate;DP Site

Photograph 4
Flow Exiting at South Gate Onto Bramlette Rd;DP Site

Photograph 5
Runoff Entering Ditch 1; West of DP Site

Photograph 6
Ditch 1 West of DP Site; View to West

Photograph 7
Stormwater Entering Sewer; South Side of Bramlette Rd
(Discharge Seen in Photograph 8)

Photograph 8
Combined Discharge From Storm Sewer, Ditch 1;
in Floodplain South of Bramlette Rd

Photograph 9
Entrance to Ditch 4; East Side of Landfill

Photograph 10
Ditch 4 Crosses Landfill; Receives Flow From Landfill Surface

Photograph 11
Ditch 2 North of Bramlette; View to the South

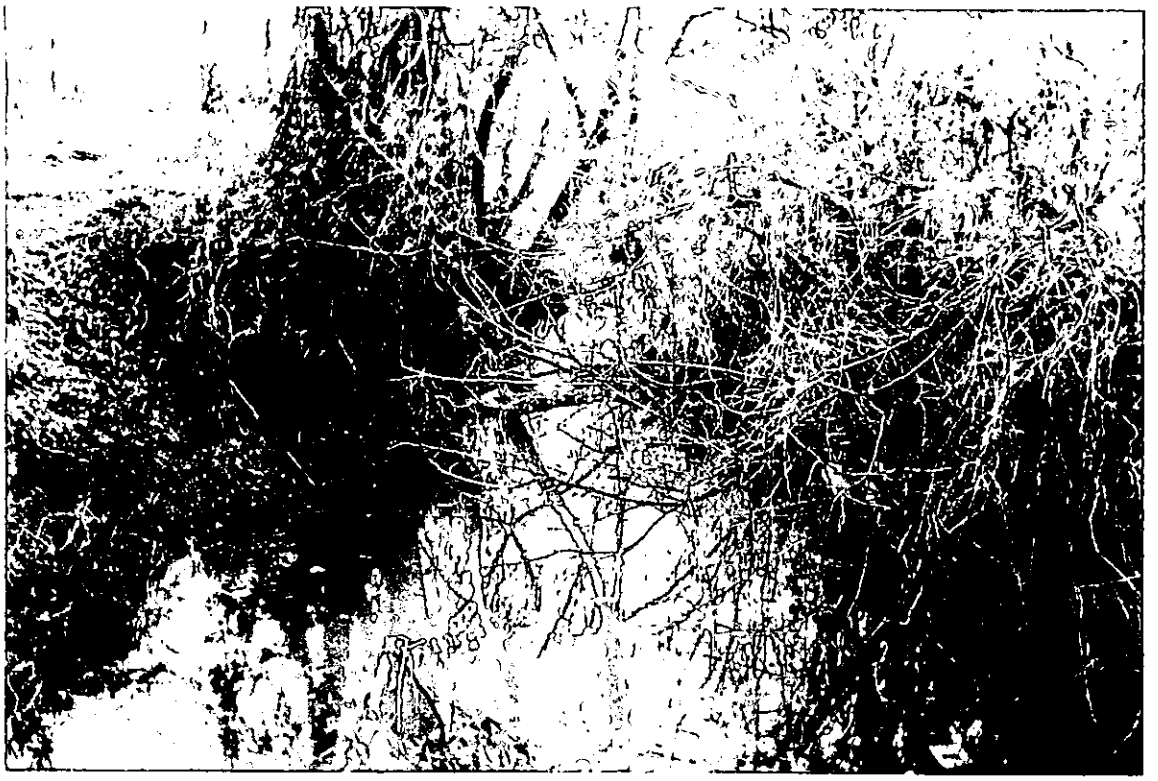

Photograph 12
Ditch 3 South of Bramlette; West Side of Landfill

Photograph 13
Ditch 5; Carries Flow South From Landfill to Willard St.

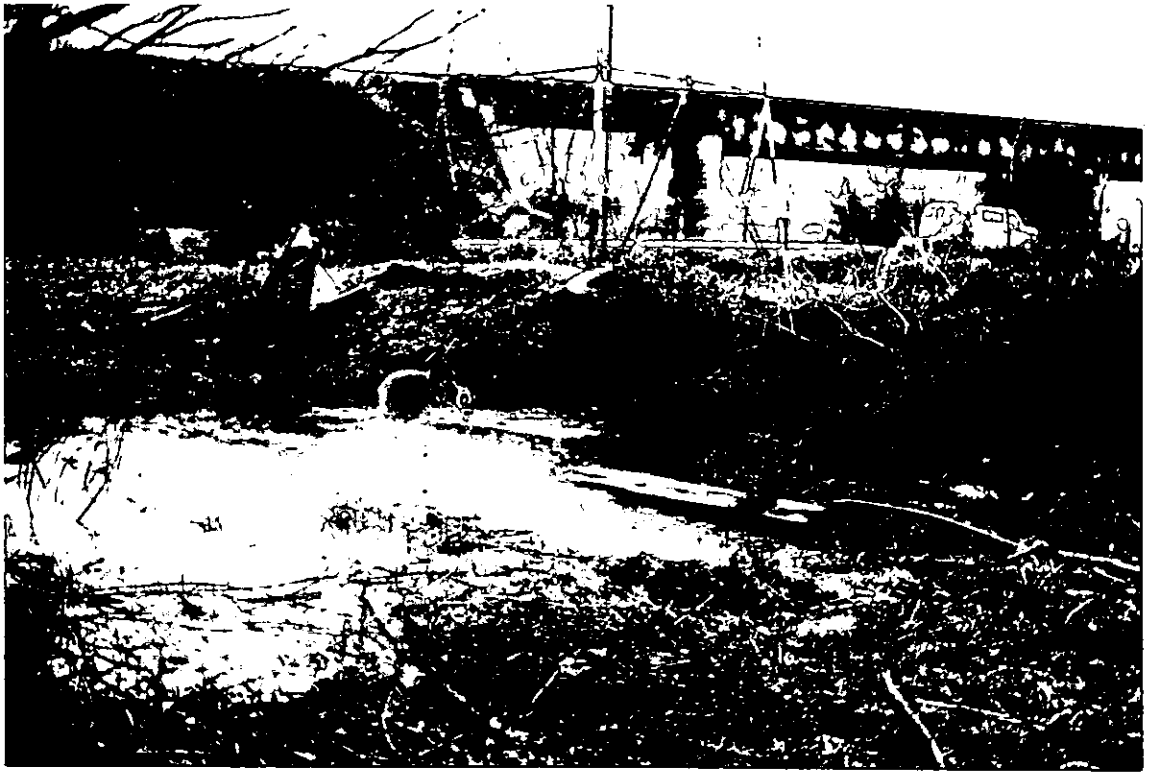

Photograph 14
Ditch 5 turns West at Willard St.

Photograph 15
Ditch 5 Flows Beneath RR Trestle and Enters Reedy River

Photograph 16
Outfall for Ditch 5 into Reedy River

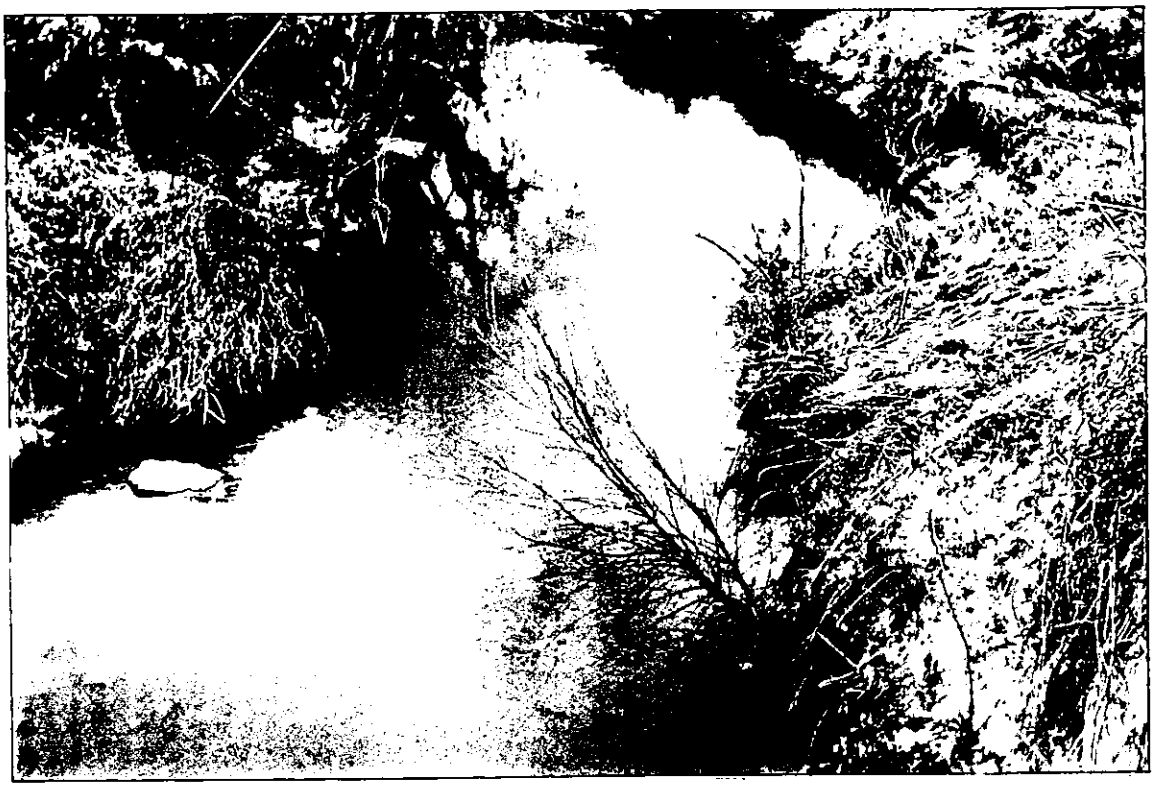

Photograph 17
Reedy River North of Bramlette Rd; Sample Location Reedy 1

Photograph 18
Reedy River at Ditch 5 Outfall; Sample Location Reedy 2

Photograph 19
Clearing DP Site for Sampling Access

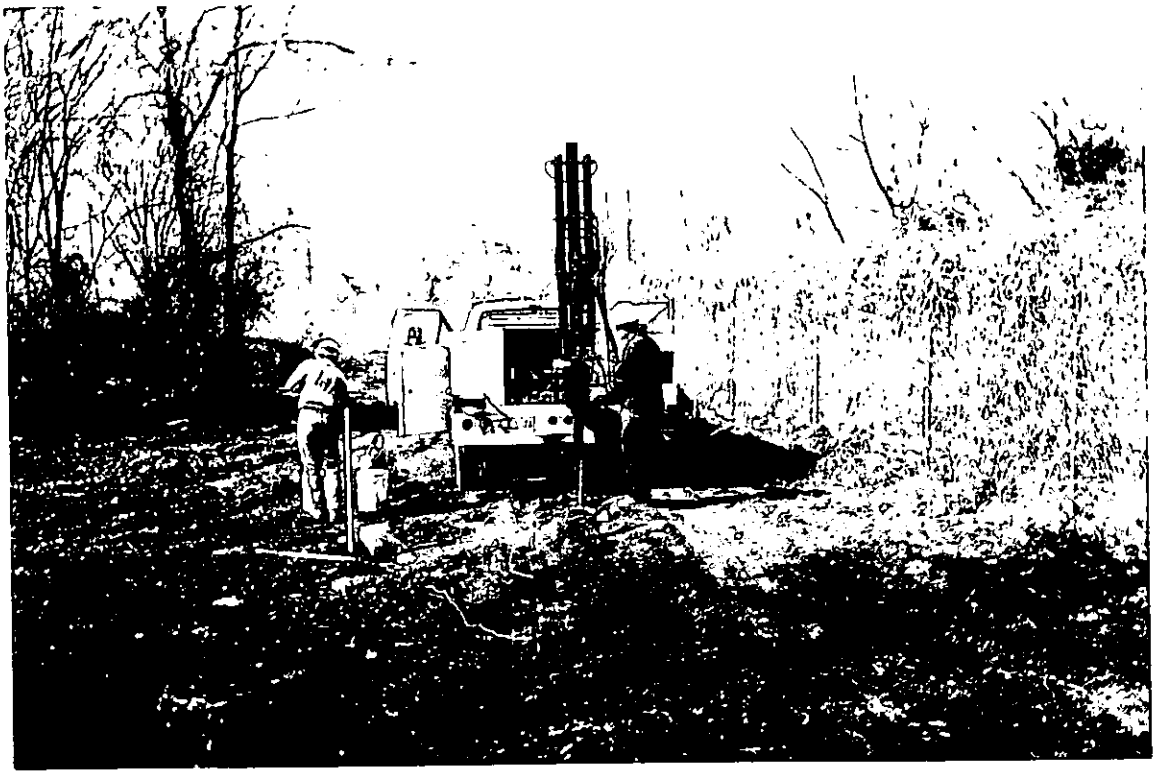

Photograph 20
Strata Probe Crew Collecting Soil Sample; North Fence DP Site

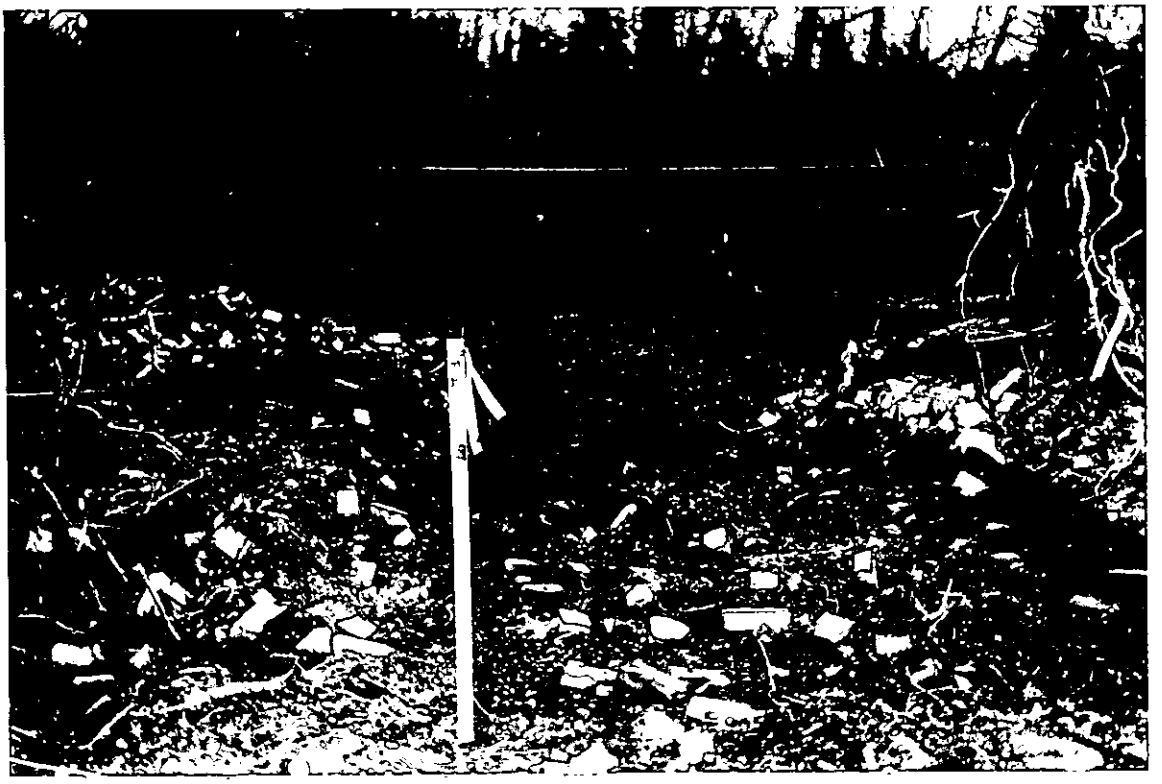

Photograph 21
Sample Location DP 12; Flagged and Staked

Photograph 22
Split Spoon Sample DP4 3-6 ft; Note Coal Tar in Center of Sample

Photograph 23
View East From Tanker Truck; Note Circular Gas Holder Foundation

Photograph 24
View West From Tanker Truck, Ditch 1 Beyond Fence

Photograph 25
View North From Tanker Truck; Retort House Foundation

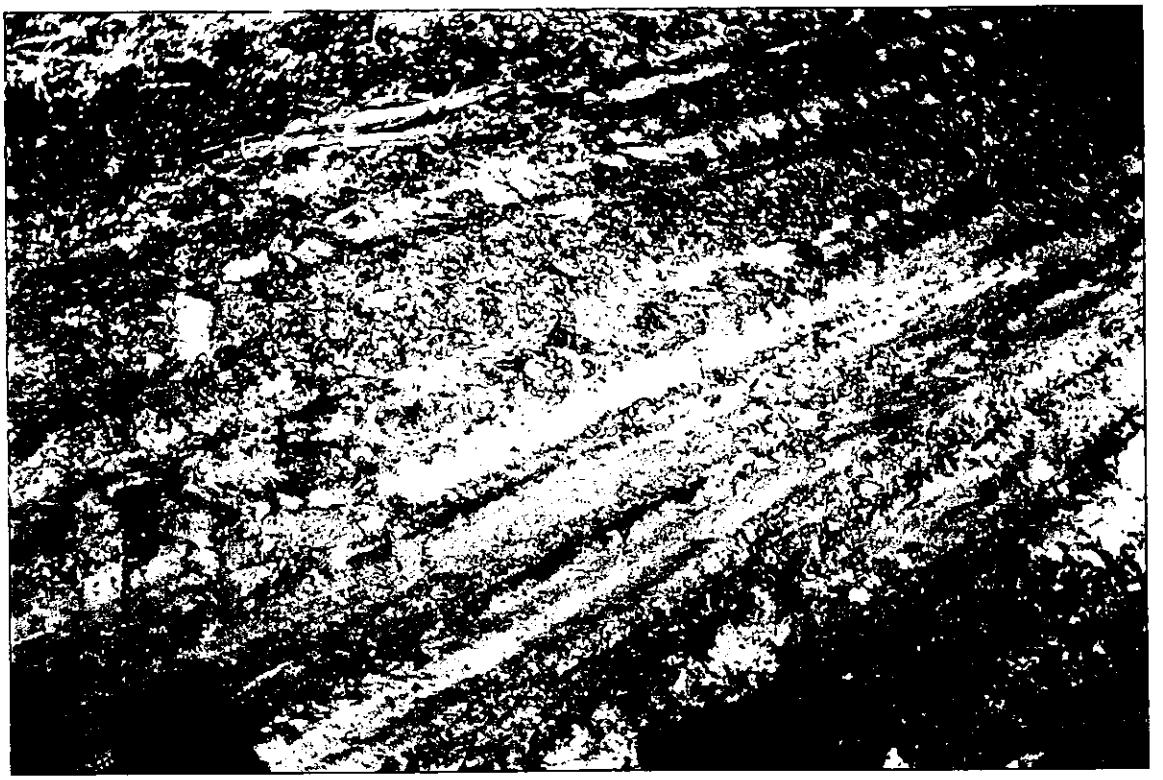

Photograph 26
Coal Tar Saturated Soils; North of Retort House Foundation

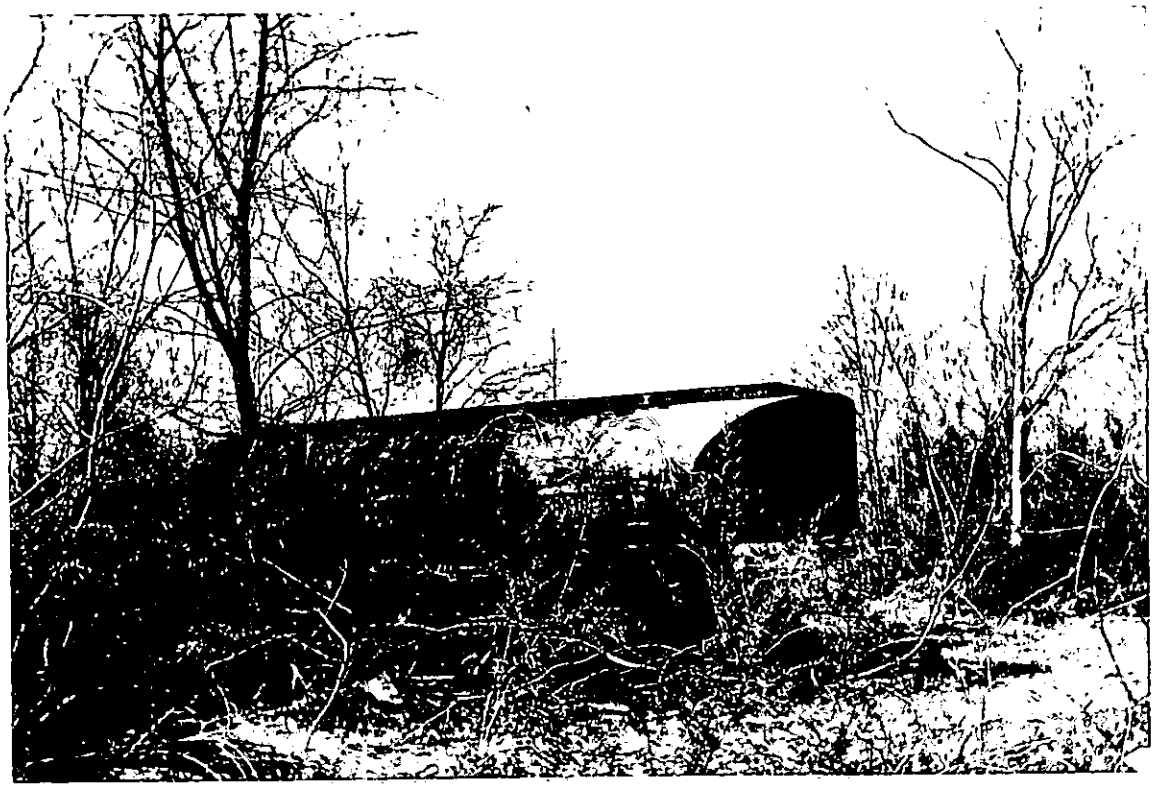

Photograph 27
Abandoned Tanker Truck; "Associated Petroleum Carriers, Spartanburg, SC"

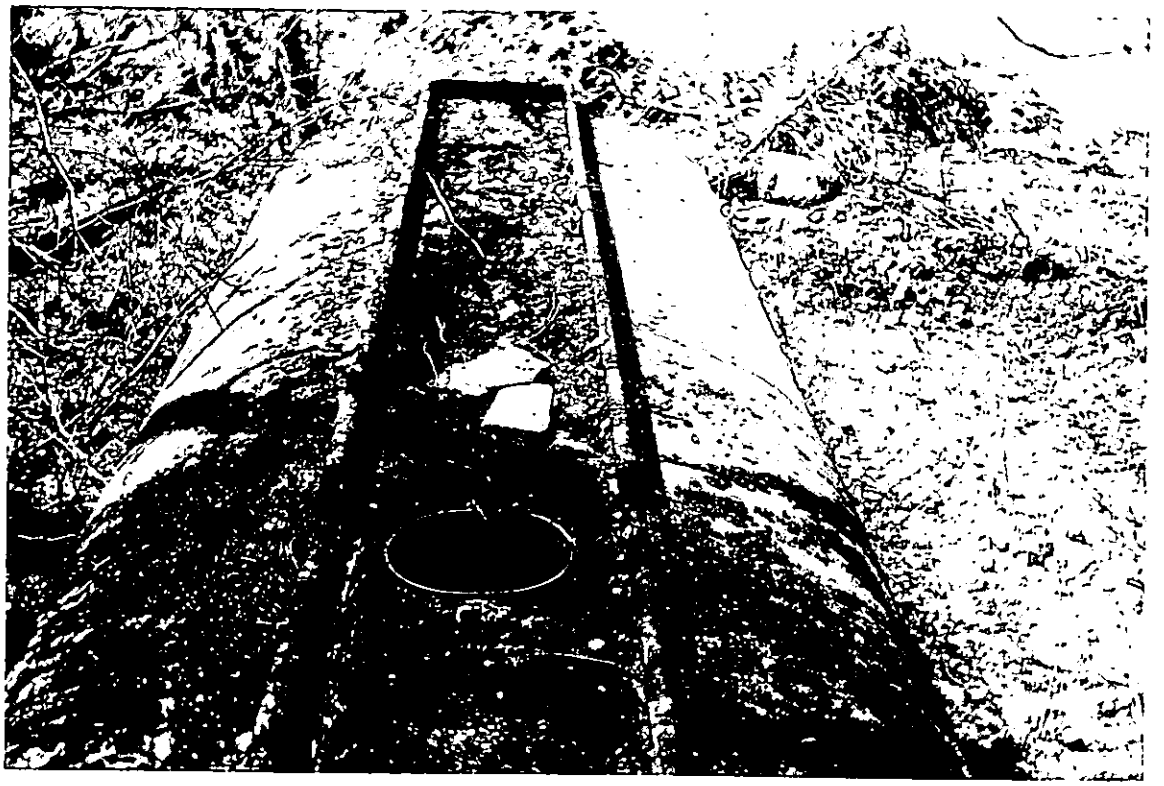

Photograph 28
Top of Tanker Truck, no Product Visible in Tanker

Photograph 29
Two Storage Tanks ≃ 600 gallons, no Product

Photograph 30
Third Storage Tank

Photograph 31
Removal of Fuel Oil Tank, Southwest Corner of Landfill

Photograph 32
Fuel Oil Tank; Slight Petroleum Odor Noted at Puncture

Photograph 33
Covering South End of Landfill With Clean Fill Dirt

Photograph 34
Debris Excavated From LF024

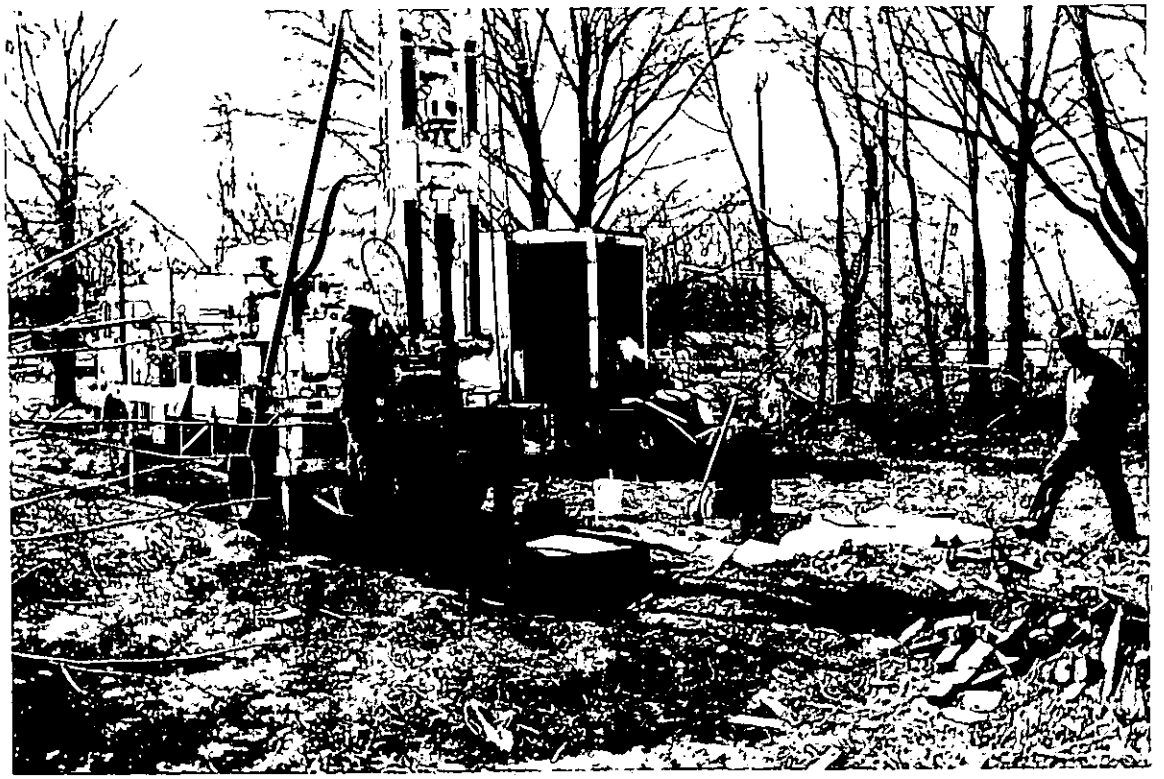

Photograph 35
GPI Installing MW-7

Photograph 36
MW-1; Northwest Corner of Vaughn Landfill

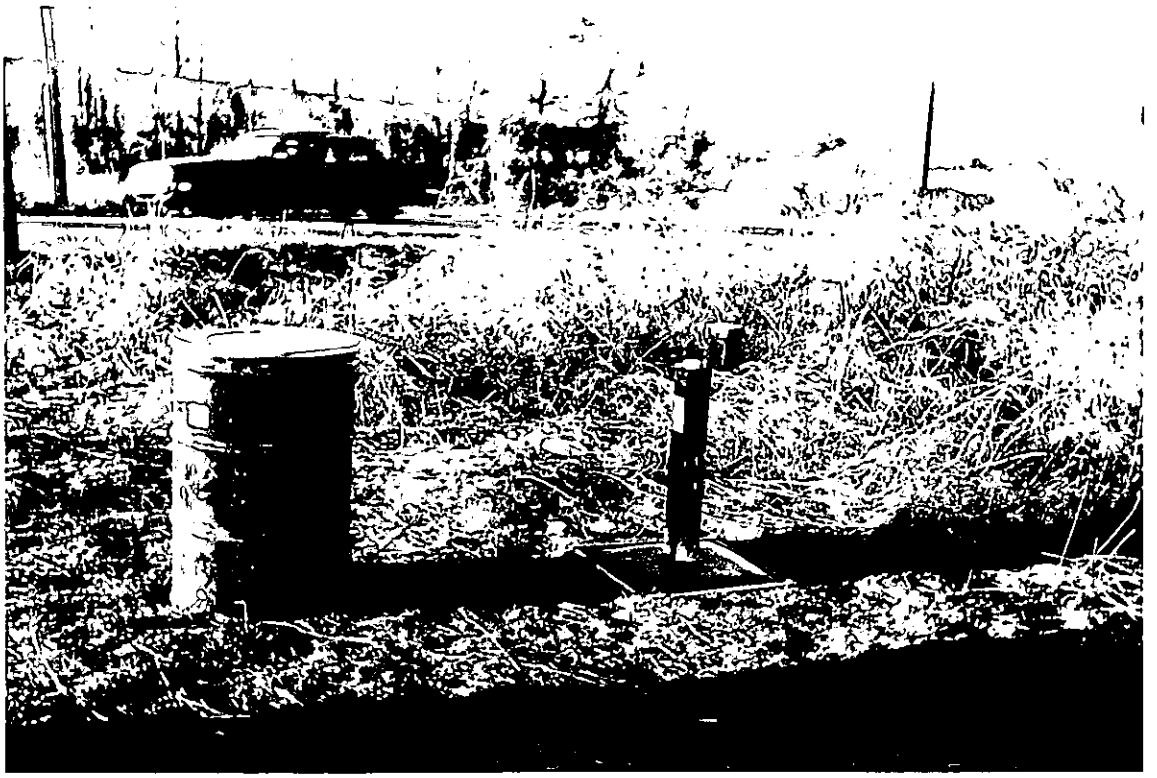

Photograph 37
MW-2; North of CSX Office

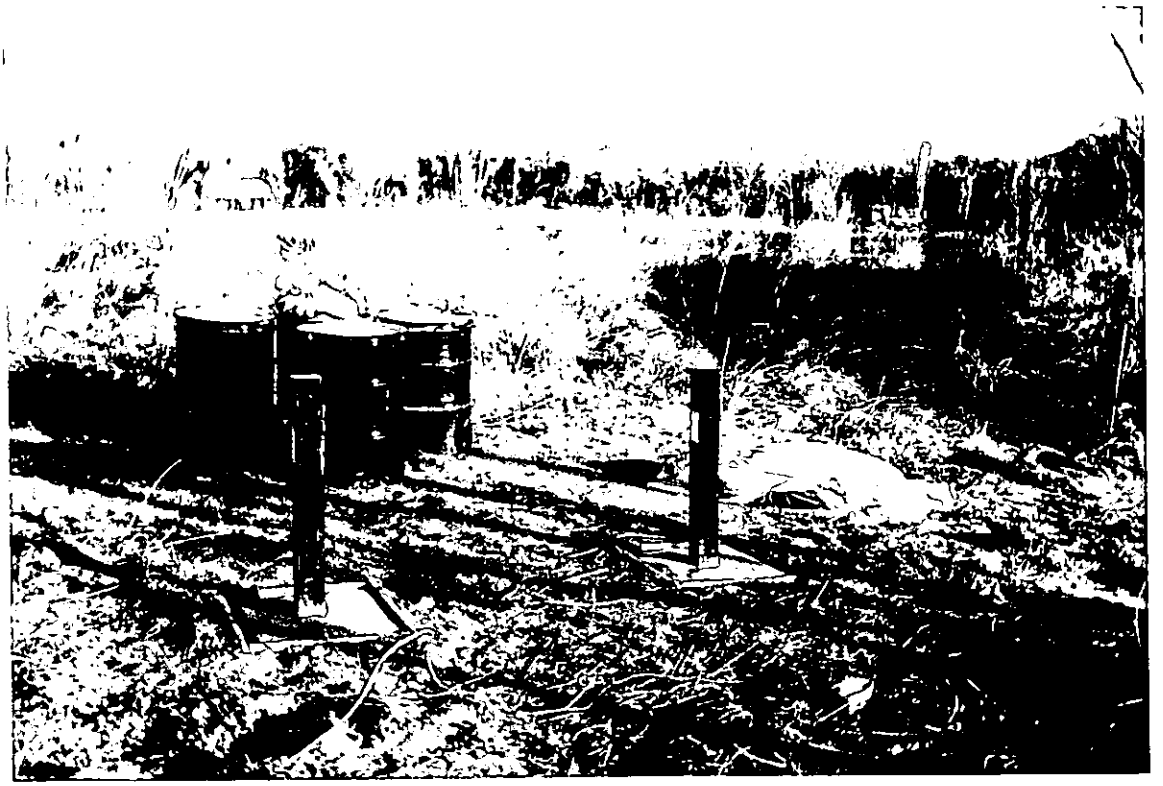

Photograph 38
MW-3 and MW-3D in Landfill

Photograph 39
MW-5; Along RR Tracks South Landfill

Photograph 40
MW-7; DP Site

F

Notes

APPENDIX F

BIOLOGICAL SURVEY

Vegetation Survey and Analysis

CSX Vaughn Landfill
Greenville, South Carolina

prepared for

Applied Engineering & Science, Inc.
Perimeter Office Park
2261 Perimeter Park Drive
Atlanta, Georgia 30341

by

Environmental Corp of America
1111 Alderman Drive
Suite 200
Alpharetta, GA 30202
ECA Project # 6-576-1

ENVIRONMENTAL CORPORATION OF AMERICA

May 31, 1996

Applied Engineering & Science, Inc.
Perimeter Office Park
2261 Perimeter Park Drive
Atlanta, GA 30341

Attention: Mr. Dave Butler

Subject: **Vegetation Survey and Analysis**
Wetlands Adjacent to CSX Vaughn Landfill
Greenville, South Carolina
ECA Project Number: 6-576-1

Dear Mr. Butler:

Environmental Corporation of America (ECA) is pleased to provide this report of our **Vegetation Survey and Analysis** at the subject site. The report was provided based on ECA Proposal No. 6-179-1, and your written authorization, dated April 15, 1996, to proceed with the project.

Environmental Corporation of America (ECA) has found that no statistically significant negative correlations exist between organic compounds in soils and the prevalence of plants present in sample plots at the subject site when a 95% confidence level is used. However, statistically significant positive correlations do exist between organic compounds and the prevalence of individuals of some species when a 95% confidence level is used.

Based on the 374 linear models constructed for each wetland habitat type identified at the site, ECA has found no direct evidence to indicate that vascular plant species are negatively impacted by elevated levels of organic compounds in wetland soils at the site. However, ECA has found that some vascular plants are more prevalent in areas where elevated levels of organic compounds were detected in wetland soils at the site.

We appreciate this opportunity to provide you with these professional services. If you have any questions regarding this report or the project in general, please call.

Sincerely yours,
Environmental Corporation of America

Marvin G. Webster, Jr., REP
Project Scientist

Ralph E. Brown, PhD, PE
Principal Engineer

1111 ALDERMAN DRIVE, SUITE 200, ALPHARETTA, GA 30202, 770-667-2040, FAX 770-667-2041

TABLE OF CONTENTS

1.0 Background

The subject site is located near Greenville, South Carolina, and is owned by CSX. A coal gasification plant was once located in the general vicinity of, and upgradient from, the subject site. Coal tar wastes historically drained from the coal gasification facility into a drainage ditch that was once located on the subject site. Ultimately, fluids in the drainage ditch drained into floodplain and wetland areas which are adjacent to the Reedy River. The Reedy River flows along the southwestern boundary of the subject site, as shown in Figure 1. Coal tar deposits are believed to have been deposited in lower lying stream channels and basins within the floodplain and wetland areas. The coal gasification plant is no longer in operation and has been demolished.

Approximately 5 years ago, CSX negotiated to sell the subject site to a local demolition contractor. This buyer reportedly failed to meet the negotiated payment schedule. Therefore, CSX regained possession of the property. However, the would-be buyer continued to use portions of the subject site as a dumping area for construction and demolition debris. This activity resulted in the northern portions of the drainage ditch being covered with construction debris. The southern portion of the drainage ditch has not been filled, and is visible near the southern extent of the filled area (see Photograph A).

Filling of the site with construction debris has raised the water levels in the wetland and floodplain areas along the western portion of the site. These high water levels have inundated much of the former floodplain areas and have created additional jurisdictional wetland areas at the site.

The State of South Carolina has directed CSX to investigate the effect of coal tar contamination on plants in the wetland areas adjacent to the on-site landfill, which is commonly referred to as the Vaughn Landfill. Applied Engineering Science (AES) has drilled borings, collected soil and groundwater samples, and have had these samples analyzed for suspect contaminants, including volatile organic compounds (VOCs) and semi-volatile organic compounds (SVOCs). Soil analytical results of VOC and SVOC tests have been provided to ECA by AES. A summary of analytical results is included in Table 1 of Appendix B.

2.0 Purpose

The purpose of this **Biological Survey** was to determine whether statistically significant linear correlations exist at the site between concentrations of volatile and semivolatile compounds in wetland soils and the prevalence of vascular plants in the wetland area adjacent to the Vaughn Landfill.

3.0 Scope of Work

It is difficult to isolate the relationship between a single environmental factor and the influence of that factor on the health of a plant association because so many factors effect the prevalence

and distributions of plant species in association. For instance, in a wetland environment, factors such as water temperature, water velocity, soil chemistry, degree of soil saturation, water inundation depths, sunlight exposure, and a host of other factors may effect plant associations. ECA considered these limiting factors in developing the project scope of work and conducting the field work.

The scope of work to fulfill the project purpose included the following items:

- ECA selected five sample plots for vegetation analysis.
- At each of the sample plots, ECA delineated an area to be studied. All sample plots consisted of a 150 square foot component and a 300 square foot component.
- At each sample plot, ECA compiled a listing of individual vascular plant species found to be present and number of plants of each species found. In cases where it was impossible to count individual plants, the area covered by the particular species was estimated.
- Data collected at each sample plot was entered into a database, along with concentrations of volatile and semivolatile compounds detected at or near the sample plot. The database was used to generate a scattergram plot of the prevalence of individuals of each species at each sample plot versus the concentrations of each volatile and semivolatile compound detected at each sample plot.
- A least squares method was used to construct a liner model of the relationships between the prevalence of plants at each sample plot and the concentrations of detected volatile and semivolatile organic compounds. The strength of the correlations between contaminant concentrations and the prevalence of plants were calculated for each model.
- This report, which documents our work, reports our findings, and offers our conclusions and recommendations was prepared and two copies are provided.

4.0 Field Work

Typically, larger data sets allow for greater confidence in the inferences that are made from statistical analysis because sample set characteristics are more likely to approximate population characteristics. In this case, analytical data was available for only five sample points at the site. For this reason, only five sample plots were delineated and surveyed.

All field work was performed on April 17, 18, and 19, 1996 by Mr. Marvin Webster of ECA. The subject site is shown in Figure 1 of Appendix A.

To evaluate the prevalence of plant species in the wetland area, ECA selected five sample plots equal in size to 450 square feet. Four sample plots were selected based on the locations of soil

samples previously collected by AES. One sample plot, WW13, was selected to obtain data from a point geographically located between WW10 and WW02.

To the extent possible, locations of sample plots were selected so that similar environmental characteristics (i.e., similar plant community structure, water depth, water temperature, and sunlight exposure) existed at each sample plot.

Two basic wetland habitat types were observed at the site. These were drainage channel habitat areas and floodplain habitat areas. Much of the floodplain habitat area was inundated during our fieldwork. These floodplain areas appear to be perpetually inundated as a result of previous filling of other areas of the site.

As indicated, AES had previously collected soil samples from channel habitat areas on site. Based on this knowledge, ECA selected sample plots so that each plot would be within 5 feet of the collection point of the previous soil sample for that sample plot.

ECA observed that channel habitats at the site were occupied by fewer and smaller plant species. Because it is more difficult to ascertain number and/or aerial extent of small species, small (150 square foot) sample plots were selected and delineated for use in surveying channel habitat areas. However, because channel habitat areas typically did not contain larger species, such as trees, woody shrubs, or vines, an additional 300 square feet of floodplain habitat was delineated at each sample plot for use in determining the prevalence of these larger floodplain habitat species.

Approximate sample plot locations are shown in Figure 2 of Appendix A. Specific conditions at each sample plot are discussed below.

4.1 Sample Plot WW02

Photograph A is a northwesterly view of sample plot WW02. The 150 square foot channel habitat survey area was positioned over the channel habitat area at this sample plot. The stake in the center of the photograph indicates the location of the soil sample previously collected at this sample plot. The deepest measured water depth within the channel was 1.2 feet in depth.

It is evident in Photograph A that little vegetation grows in the center of the channel at this sample plot. It is also evident that a greater number of plants are located in floodplain areas to the east and west of the 150 square foot channel habitat survey area. At this sample plot a 150 square foot floodplain habitat survey area was delineated adjacent to both the eastern and western boundary of the channel habitat area. The three 150 square foot areas give a combined total of 450 square feet.

4.2 Sample Plot WW10

At WW10 (not pictured), a 150 square foot survey area was positioned over the channel habitat area. The deepest measured water depth within the channel at WW10 was 2 feet in depth. As

In cases where it was impossible to count individual specimens (where multiple shoots originated at the same base, or where roots were observed to grow from individual nodes on a single plant) a cover value was estimated for the particular species. The cover value was derived by multiplying the estimated square footage covered by a particular species by the estimated density of coverage. At sample plots where a particular species was present, but where the estimated cover value was determined to be less than 1%, a value of 1% was assigned.

In floodplain habitat areas, the prevalence of only woody trees, shrubs, vines, and the species, *Peltandra sagittaefolia* (because of its height above the water surface) was determined. Also, because no channel habitat area existed at sample plot WW13, the prevalence of only woody trees, shrubs, vines, and the species, *Peltandra sagittaefolia* in the two 150 square foot floodplain survey areas were determined.

5.0 Statistical Analysis

Statistical analysis typically consists of two components, descriptive statistics and inferential statistics. Descriptive statistics are simply the numerical results of mathematical calculations involving data from selected sample sets. Inferential statistics involves making inferences about population characteristics based on the calculated descriptive statistics.

Four volatile compounds and 13 semivolatile compounds have been detected in soils at the subject site. In addition, ECA recorded the presence of twenty-two vascular plant species within the sample plots surveyed. This resulted in the need to construct 374 linear models for each habitat type.

The vegetation data collected and analytical results provided were entered into a database. ECA used the statistical software program SPSS/PC+ to generate a linear model and corresponding regression statistics for each organic compound with each species occurring in the channel habitat area at each plot and with selected species occurring within the floodplain habitat area at each sample plot. The regression statistics calculated were the Pearson Produce Moment Coefficient of Correlation, *R*, the Coefficient of Determination, *R Square*, and the significance level.

The Pearson Produce Moment Coefficient of Correlation, *R*, is a numerical measure of the strength of the linear relationship between two random variables (in this case the organic compound concentration and the prevalence of individuals of each species). *R* values may range from +1 to -1, with an *R* value of 1 representing a very strong positive linear correlation (as organic compound concentration increases, the prevalence of individuals of a particular species increases). An *R* value of -1 represents a very strong negative correlation (as organic compound concentration increases, the prevalence of individuals of a particular species decreases). An *R* value of zero implies no linear relationship.

The Coefficient of Determination, *R Square*, represents the proportion of sample variability that is explained by a linear model. For instance, if the use of a particular model eliminates all

sample variability (all observations fall on the least squares regression line) the *R Square* value will be 1.0. An *R Square* value of 0.20 indicates that the observed variability about the least squares line is reduced by only 20% through the use of a particular model.

The significance level is a numerical measure of the likelihood of rejecting a hypothesis when it is, in fact, true. The null hypothesis in this case is that no significant linear relationship exists between organic compounds in soil at the site and the prevalence of individual plants. A significance level of less that 0.050, which corresponds to a 95% confidence level, means that there is less than a 1 in 20 chance of concluding that a linear relationship exists when, in actuality, no linear relationship exists.

A small significance level is not an indication that the model used is the best model available to describe a particular relationship. Some relationships characterized by a highly significant linear correlations may, in fact, be non-linear. In such a case a non-linear model could be constructed that would be characterized by even more significant correlations.

The 95% confidence level is typically recommended and is the most commonly used confidence level in statistical evaluation of biological survey data. ECA selected the 95% confidence level for this analysis.

As indicated, a very large number of models were constructed to complete the statistical analysis portion of this project. ECA has not tabulated the results of calculations for all models. Rather, the results of all calculations were screened and only those relationships determined to have an *R* value exceeding 80% were tabulated. The regression statistics for each relationship meeting this criteria are provided in Tables 3 and 4 of Appendix B. Table 3 contains statistics for channel species correlations. Table 4 contains statistics for floodplain species correlations.

6.0 Results

6.1 Channel Habitat Areas

As is shown in Table 3, only a few strong correlations exist between organic compounds in soils and the prevalence of wetland plants identified in channel habitats at the site. Strong correlations (*R* values near +/- 1.0) do exist between organic compounds in soils at the site and the common grass, *Carex intumescens*.

The correlation of the prevalence of *Carex i.* specimens with organic compounds in soils at the site is negative for SVOCs (Benzo(a)Pyrene, Chrysene, Fluoranthene, and Pyrene) and positive for VOCS (Benzene, Ethylbenzene, Toluene, and Xylenes).

Large *R Square* values were observed for some of the *Carex i.* correlations. The large *R Square* values indicate that a large portion of the differences between the prevalence of species predicted by the model and the actual observed prevalence is explained by the linear model used in this analysis.

Though large *R* and *R Square* values exist for te *Carex i.* correlations, the true test of statistical significance is whether the significance values fall within the designated 95% confidence level. As is evident in Table 2, no significance values smaller than 0.05, a numerical value which corresponds to the 95% confidence level were reported. Therefore, no statistical significance exists at the 95% confidence level for any of the models constructed for *Carex i.*

Similarly, no statistically significant correlations were observed at the 95% confidence level for *Polygala lutea* or *Salix nigra* with any of the organic compounds. Statistical significance was observed at the 95% confidence level for correlations between *Smilax laurifolia* and some organic compounds present in soils at the site. In fact, the observed significance values for *Smilax l.* fall within the 99% confidence interval.

6.2 Floodplain Habitat Areas

Regarding floodplain species correlations, Table 3 shows that statistically significant positive correlations were observed at the 95% confidence interval for *Cornus florida, Ilex opaca, Impatiens capensis, Juncus (unknown), Liquidambar styraciflua, Salix nigra, Scripus atrovirens, and Smilax laurifolia.*

7.0 Conclusions

Of the 374 models constructed for channel habitat survey areas, ECA found no direct evidence that vascular plant species inhabiting channel habitat survey areas were negatively impacted by increased levels of organic compounds in wetland soils.

The prevalence of the species, *Smilax l.* was determined to be greater in channel habitat areas where elevated levels of benzo(b)fluoranthene, benzo(g,h,i)perylene, benzo(k)fluoranthene, indeno(1,2,3-cd)pyrene, naphthalene, and phenanthrene were detected. The prevalence of other species identified in channel habitat areas at the site were determined to bear no significant relationship to organic compound levels in soils.

Of the 374 models constructed for floodplain habitat survey areas, the prevalence of the species, *Cornus f.*, *Impatiens c.*, and *Liquidambar s.*, were determined to be greater in floodplain habitat areas where elevated levels of acenapthylene, benzo(a)anthracene, benzo(a)pyrene, benzo(b)fluoranthene, benzo(g,h,i)perylene, benzo(k)fluoranthene, chrysene, indeno(1,2,3-cd)pyrene, phenanthrene, and pyrene were detected.

The prevalence of the species, *Ilex o.*, *Rubus a.*, *Salix n.*, and *Scripus a.*, *Juncus*, *Lonicera j.*, and *Smilax l.* were determined to be greater in floodplain habitat areas where elevated naphthalene levels were detected.

Competition for space is often a primary controlling factor in plant associations. Individual plants colonize spaces that become open within plant communities. It is possible that the species which are more prevalent in sample plots where soil concentrations of organic compounds are

higher are the beneficiaries of competitive disadvantages experienced by other species observed to be less prevalent or absent from these areas. However, this survey and analysis provides no direct evidence that such a competition dynamic exists.

8.0 Recommendations

If you would like to learn more about the effects of organic compounds on the wetland plants at the subject site, ECA recommends that additional sample plots be surveyed and that the data obtained from these sample plots be analyzed.

Such additional work would provide a more accurate analysis of the relationships between organic compounds in wetland soils and the prevalence of vascular plants in the wetland areas. The additional work could also result in a finding that a non-linear model would more accurately describe the relationship between organic compounds in wetland soils and the prevalence of vascular plants in the wetland on site.

9.0 Limitations of Study

This Survey and Analysis was conducted in accordance with generally accepted practices of the profession for such studies, conducted during the same time period and in the same geographical area as this study. ECA has exercised the same degree of care and skill generally exercised by environmental professionals under similar circumstances and conditions. No other warranty is expressed or implied.

The observations, opinions and conclusions presented are not scientific certainties, but are solely opinions based upon the information available to us and our professional judgement based upon that information which may be incomplete and/or inaccurate. The services provided herein are in no way intended to be legal advice and should not be relied upon in any way for legal interpretations.

This study and report have been prepared on behalf of and for the exclusive use of Applied Engineering & Science and its Client, CSX, solely for its use and reliance in the environmental assessment of the site. This report and the findings contained herein shall not, in whole or in part, be disseminated or conveyed to any other party, nor used or relied upon by any other party, in whole or in part, without written notification from Applied Engineering & Science to ECA. In that case, ECA will issue a letter of understanding to the third party for their signature and will provide a copy of this report to the third party as directed by Applied Engineering & Science and its Client, CSX, for a processing fee. Notwithstanding, anything to the contrary herein, any third party reliance is limited to the agreed upon scope of work by and between ECA and Applied Engineering and Science.

APPENDIX A

FIGURES

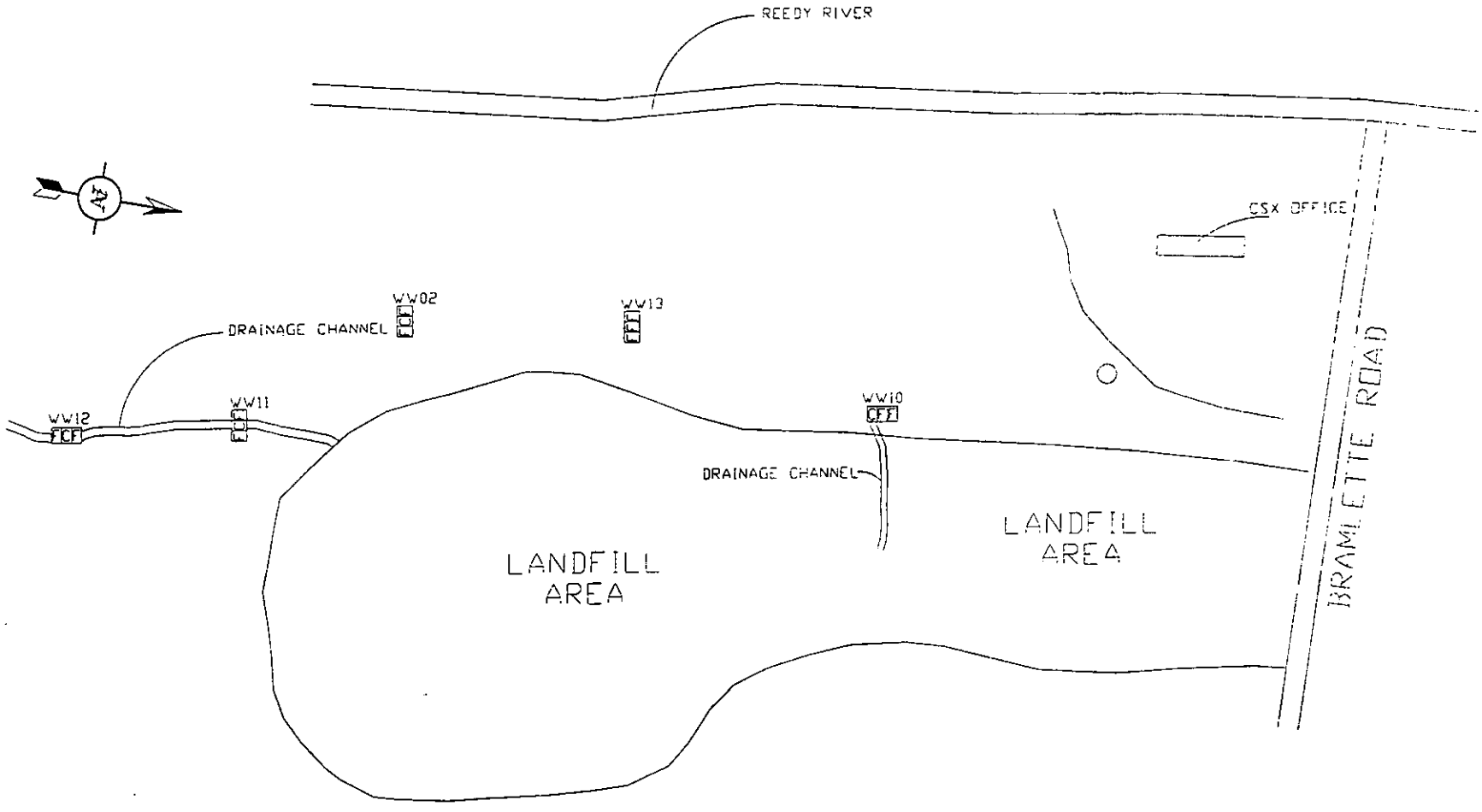

0 80 160
SCALE IN FEET

VEGETATION SURVEY AND ANALYSIS
CSX VAUGHN LANDFILL, GREENVILLE, SC

FIGURE 2: SITE PLAN AND SAMPLE PLOT LOCATIONS

SOURCE: DRAWING PROVIDED BY AES

DRAWN BY: MGW DATE: 5/29/96
FILE NAME: I:\%\65761.DWG

ECA Project # 6-576-1

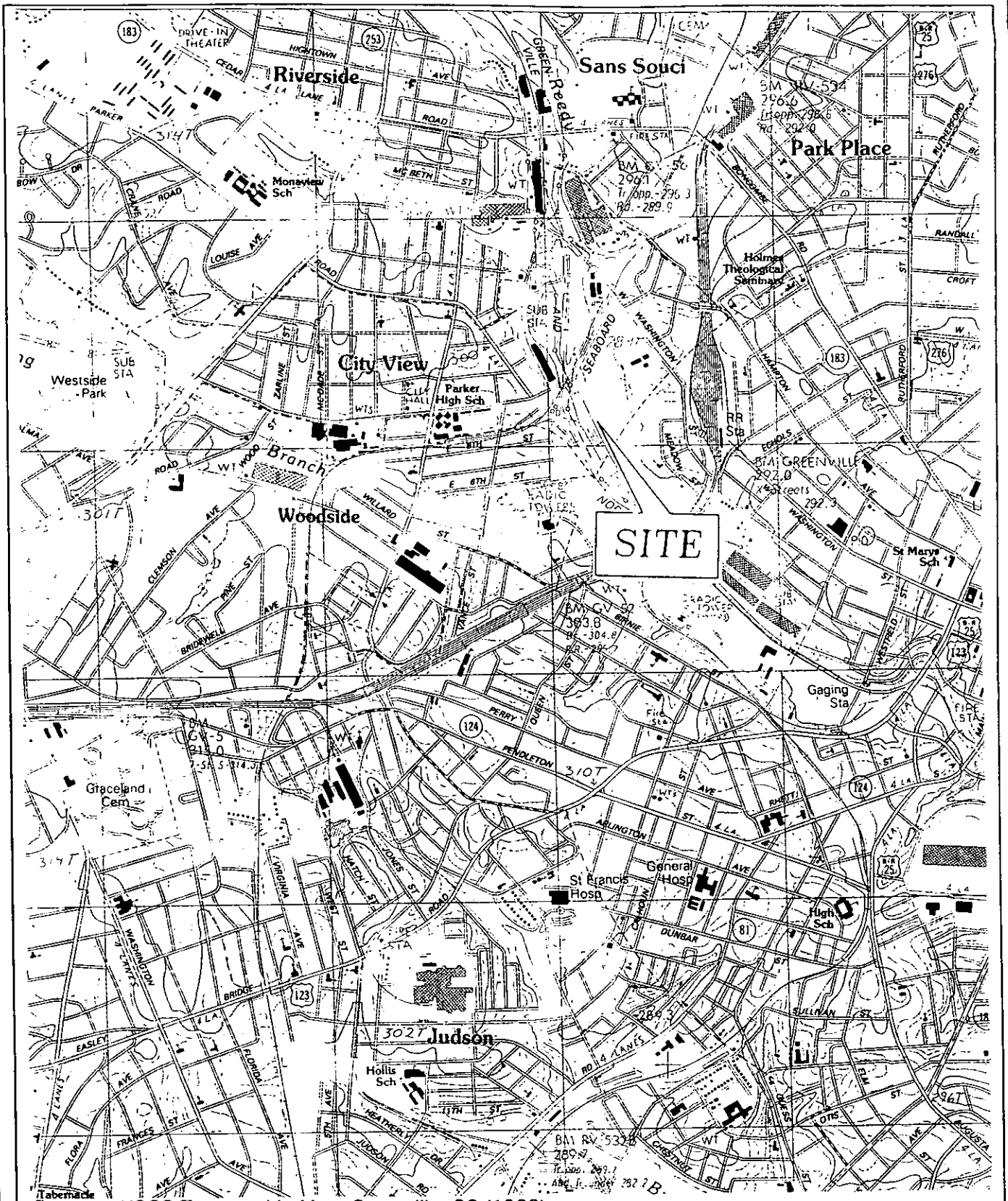

Source: USGS Topographic Map, Greenville, SC (1983)

N

Scale:

1" = 2000'

Vegetation Survey and Analysis
CSX Vaughn Landfill, Greenville, SC

Figure 1: Site Location Plan

Environmental Corporation of America

ECA Project # 6-576-1

Form 101- 6/2/94

APPENDIX B

TABLES

ENVIRONMENTAL CORPORATION OF AMERICA

CSX Vaughn Landfill
Greenville, South Carolina

TABLE 1: VOLATILE AND SEMIVOLATILE ORGANIC COMPOUND CONCENTRATIONS FOR SAMPLE PLOTS

Sample Plot	Acenapthene ug/kg	Benzene ug/kg	Benzo(a)-anthracene ug/kg	Benzo(b)-fluoranthene ug/kg	Benzo(k)-fluoranthene ug/kg	Benzo(g,h,i)-perylene ug/kg	Benzo(a)-pyrene ug/kg	Chrysene ug/kg	Ethylbenzene ug/kg
WW002	NA	12000	NA	NA	NA	NA	NA	NA	2600
WW10	0	0	2700	3100	2300	2500	1900	2800	0
WW11	0	0	0	0	0	0	12000	11000	0
WW12	0	0	0	0	0	0	0	0	0
WW13	13000	0	33000	24000	36000	19000	32000	32000	0

Sample Plot	Fluoranthene ug/kg	Indeno(1,2,3 -cd)-pyrene ug/kg	Napthalene ug/kg	Phenanthrene ug/kg	Pyrene ug/kg	Styrene ug/kg	Toluene ug/kg	Xylenes (totals) ug/kg
WW002	NA	NA	NA	NA	NA	8300	18000	26000
WW10	4400	2100	130	1300	4000	0	0	0
WW11	20000	0	0	0	17000	0	0	0
WW12	0	0	0	0	0	0	0	0
WW13	52000	17000	0	37000	73000	0	0	0

ENVIRONMENTAL CORPORATION OF AMERICA

CSX Vaughn Landfill
Greenville, South Carolina

TABLE 2: CHANNEL AND FLOODPLAIN HABITAT SPECIES ABUNDANCES BY SAMPLE PLOT

Sample Plot	Acer negundo		Acer rubra		Aster (unknown)		Polygala lutea		Scirpus atrovirens	
	Channel	Floodplain	Channel	Floodplain	Channel	Floodplain	Channel	Floodplain	Channel	Floodplain
WW002	2	9	0	0	0	0	0	NA	0	1
WW10	0	5	0	3	0	0	0	NA	0	1
WW11	0	22	0	2	0	0	48	NA	0	0
WW12	3	2	0	0	6	0	12	NA	0	0
WW13	NA	2	NA	0	NA	0	NA	NA	NA	0

Sample Plot	Carex intumescens		Smilax latifolia		Staphylea trifolia		Plantago rugeli		Cornus florida	
	Channel	Floodplain	Channel	Floodplain	Channel	Floodplain	Channel	Floodplain	Channel	Floodplain
WW002	2	NA	0	0	0	0	0	0	0	0
WW10	1	NA	4	10	0	0	0	4	0	0
WW11	0	NA	0	0	0	4	0	4	0	0
WW12	1	NA	0	0	0	0	0	0	0	0
WW13	NA	NA	NA	0	NA	0	NA	0	NA	1

ENVIRONMENTAL CORPORATION OF AMERICA

CSX Vaughn Landfill
Greenville, South Carolina

TABLE 2 (Cont.): REGRESSION STATISTICS FOR CHANNEL SPECIES/CONTAMINANT LEVEL COEFFICIENT CORRELATIONS (R) EXCEEDING 80%

Sample	Impatiens capensis		Ilex opaca		Juncus (unknown)		Ligusttrum vulgare		Liquidambar styraciflua		Lonicera japonica	
Plot	Channel	Floodplain	Channel	Floodplain	Channel	Floodplain	Channel	Floodplain	Channel	Floodplain	Channel	Floodplain
WW002	0	0	0	0	0	0	0	0	0	0	0	0
WW10	0	0	0	2	0	2	0	2	0	0	0	16
WW11	0	0	0	0	0	0	0	21	0	0	0	9
WW12	3	0	0	0	0	0	7	0	0	0	0	0
WW13	NA	1	NA	0	NA	0	NA	0	0	1	NA	1

Sample	Peltandra virginica		Rhus radicans		Quercus rubra		Rubus allegensis		Salix nigra		Sambucus canadensis	
Plot	Channel	Floodplain	Channel	Floodplain	Channel	Floodplain	Channel	Floodplain	Channel	Floodplain	Channel	Floodplain
WW002	0	1	0	0	0	0	0	0	0	0	0	0
WW10	0	0	0	0	0	0	0	8	2	20	0	0
WW11	1	10	0	20	0	1	0	4	0	1	0	1
WW12	3	2	1	0	0	0	0	0	6	0	0	0
WW13	NA	0	NA	0	NA	0	NA	0	NA	1	NA	0

ENVIRONMENTAL CORPORATION OF AMERICA

CSX Vaughn Landfill
Greenville, South Carolina

TABLE 3: REGRESSION STATISTICS FOR CHANNEL SPECIES/CONTAMINANT LEVEL COEFFICIENT CORRELATIONS (R) EXCEEDING 80%

Species	Carex intumescens			Polygala lutea			Smilax lauraflola			Salix nigra		
Contaminant	R	R Square	Sig.	R	R Square	Sig.	R	R Square	Sig.	R	R Square	Sig.
Benzene	0.81	0.66	0.18	NA	NA	NA	NA	NA	NA	NA	NA	NA
Benzo(a)pyrene	-0.99	0.98	0.09	0.92	0.86	0.25	NA	NA	NA	-0.84	0.71	0.36
Benzo(b)fluoranthene	NA	NA	NA	NA	NA	NA	1.00	1.00	0.00	NA	NA	NA
Benzo(g,h,i)perylene	NA	NA	NA	NA	NA	NA	1.00	1.00	0.00	NA	NA	NA
Benzo(k)fluoranthene	NA	NA	NA	NA	NA	NA	1.00	1.00	0.00	NA	NA	NA
Chrysene	-0.97	0.94	0.16	0.88	0.78	0.31	NA	NA	NA	-0.89	0.79	0.29
Ethylbenzene	0.82	0.67	0.18	NA	NA	NA	NA	NA	NA	NA	NA	NA
Fluoranthene	-0.98	0.96	0.13	0.90	0.81	0.29	NA	NA	NA	-0.88	0.77	0.32
Indeno(1,2,3-cd)pyrene	NA	NA	NA	NA	NA	NA	1.00	1.00	0.00	NA	NA	NA
Napthalene	NA	NA	NA	NA	NA	NA	1.00	1.00	0.00	NA	NA	NA
Phenanthrene	NA	NA	NA	NA	NA	NA	1.00	1.00	0.00	NA	NA	NA
Pyrene	-0.98	0.95	0.14	0.89	0.79	0.30	NA	NA	NA	-0.88	0.78	0.31
Toluene	0.81	0.67	0.18	NA	NA	NA	NA	NA	NA	NA	NA	NA
Xylenes	0.81	0.67	0.18	NA	NA	NA	NA	NA	NA	NA	NA	NA

NA = Correlation Coefficient, R, does not exceed 80%

ENVIRONMENTAL CORPORATION OF AMERICA

CSX Vaughn Landfill
Greenville, South Carolina

TABLE 4: REGRESSION STATISTICS FOR FLOODPLAIN SPECIES/CONTAMINANT LEVEL COEFFICIENTS, R, EXCEEDING 80%

Species / Contaminant	Cornus florida			Ilex opaca			Impatiens capensis		
	R	R Square	Sig.	R	R Square	Sig.	R	R Square	Sig.
Acenapthalene	1.00	1.00	<0.005	NA	NA	NA	1.00	1	<0.005
Benzene	NA	NA	NA	NA	NA	NA	NA	NA	NA
Benzo(a)anthracene	0.99	0.99	0.003	NA	NA	NA	0.99	0.99	0.003
Benzo(a)pyrene	0.93	0.93	0.067	NA	NA	NA	0.93	0.93	0.067
Benzo(b)fluoranthene	0.99	0.99	0.008	NA	NA	NA	0.99	0.99	0.008
Benzo(g,h,i)perylene	0.99	0.99	0.008	NA	NA	NA	0.99	0.99	0.008
Benzo(k)fluoranthene	0.99	0.99	0.002	NA	NA	NA	0.99	0.99	0.002
Chrysene	0.94	0.90	0.053	NA	NA	NA	0.94	0.9	0.053
Ethylbenzene	NA	NA	NA	NA	NA	NA	NA	NA	NA
Fluoranthene	NA	NA	NA	NA	NA	NA	NA	NA	NA
Indeno(1,2,3-cd)pyrene	0.99	0.99	0.007	NA	NA	NA	0.99	0.99	0.007
Napthalene	NA	NA	NA	1.00	1.00	<0.005	NA	NA	NA
Phenanthrene	0.99	0.99	0.006	NA	NA	NA	0.99	0.99	0.006
Pyrene	0.98	0.95	0.023	NA	NA	NA	0.98	0.95	0.023
Toluene	NA	NA	NA	NA	NA	NA	NA	NA	NA
Xylenes	NA	NA	NA	NA	NA	NA	NA	NA	NA

NA = Correlation Coeficient, R, does not exceed 80%

ENVIRONMENTAL CORPORATION OF AMERICA

CSX Vaughn Landfill
Greenville, South Carolina

TABLE 4(Cont.): REGRESSION STATISTICS FOR FLOODPLAIN SPECIES/CONTAMINANT LEVEL CORRELATION COEFFICIENTS, R, EXCEEDING 80%

Species / Contaminant	Rubus allegensis			Salix nigra			Scripus atrovirens		
	R	R Square	Sig.	R	R Square	Sig.	R	R Square	Sig.
Acenapthalene	NA	NA	NA	NA	NA	NA	NA	NA	NA
Benzene	NA	NA	NA	NA	NA	NA	NA	NA	NA
Benzo(a)anthracene	NA	NA	NA	NA	NA	NA	NA	NA	NA
Benzo(a)pyrene	NA	NA	NA	NA	NA	NA	NA	NA	NA
Benzo(b)fluoranthene	NA	NA	NA	NA	NA	NA	NA	NA	NA
Benzo(g,h,i)perylene	NA	NA	NA	NA	NA	NA	NA	NA	NA
Benzo(k)fluoranthene	NA	NA	NA	NA	NA	NA	NA	NA	NA
Chrysene	NA	NA	NA	NA	NA	NA	NA	NA	NA
Ethylbenzene	NA	NA	NA	NA	NA	NA	NA	NA	NA
Fluoranthene	NA	NA	NA	NA	NA	NA	NA	NA	NA
Indeno(1,2,3-cd)Pyrene	NA	NA	NA	NA	NA	NA	NA	NA	NA
Napthalene	0.87	0.76	0.130	0.99	0.99	0.001	1.00	1.00	<0.005
Phenanthrene	NA	NA	NA	NA	NA	NA	NA	NA	NA
Pyrene	NA	NA	NA	NA	NA	NA	NA	NA	NA
Toluene	NA	NA	NA	NA	NA	NA	NA	NA	NA
Xylenes	NA	NA	NA	NA	NA	NA	NA	NA	NA

NA = Correlation Coeficient, R, does not exceed 80%

ENVIRONMENTAL CORPORATION OF AMERICA

CSX Vaughn Landfill
Greenville, South Carolina

TABLE 4(Cont.): REGRESSION STATISTICS FOR FLOODPLAIN SPECIES/CONTAMINANT LEVEL CORRELATION COEFFICIENTS, R, EXCEEDING 80%

Species / Contaminant	Juncus (unknown)			Liquidambar styraciflua			Lonicera japonica		
	R	R Square	Sig.	R	R Square	Sig.	R	R Square	Sig.
Acenapthalene	NA	NA	NA	1.00	1.00	<0.005	NA	NA	NA
Benzene	NA	NA	NA	NA	NA	NA	NA	NA	NA
Benzo(a)anthracene	NA	NA	NA	0.99	0.99	0.003	NA	NA	NA
Benzo(a)pyrene	NA	NA	NA	0.93	0.93	0.067	NA	NA	NA
Benzo(b)fluoranthene	NA	NA	NA	0.99	0.99	0.008	NA	NA	NA
Benzo(g,h,i)perylene	NA	NA	NA	0.99	0.99	0.008	NA	NA	NA
Benzo(k)fluoranthene	NA	NA	NA	0.99	0.99	0.002	NA	NA	NA
Chrysene	NA	NA	NA	0.94	0.90	0.053	NA	NA	NA
Ethylbenzene	NA	NA	NA	NA	NA	NA	NA	NA	NA
Fluoranthene	NA	NA	NA	NA	NA	NA	NA	NA	NA
Indeno(1,2,3-cd)Pyrene	NA	NA	NA	0.99	0.99	0.007	NA	NA	NA
Napthalene	1.00	1.00	<0.005	NA	NA	NA	0.84	0.71	0.156
Phenanthrene	NA	NA	NA	0.99	0.99	0.006	NA	NA	NA
Pyrene	NA	NA	NA	0.98	0.95	0.023	NA	NA	NA
Toluene	NA	NA	NA	NA	NA	NA	NA	NA	NA
Xylenes	NA	NA	NA	NA	NA	NA	NA	NA	NA

NA = Correlation Coeficient, R, does not exceed 80%

ENVIRONMENTAL CORPORATION OF AMERICA

CSX Vaughn Landfill
Greenville, South Carolina

TABLE 4(Cont.): REGRESSION STATISTICS FOR FLOODPLAIN SPECIES/CONTAMINANT LEVEL CORRELATION COEFFICIENTS, R, EXCEEDING 80%

Species	Smilax laurafolia		
Contaminant	R	R Square	Sig.
Acenapthalene	NA	NA	NA
Benzene	NA	NA	NA
Benzo(a)anthracene	NA	NA	NA
Benzo(a)pyrene	NA	NA	NA
Benzo(b)fluoranthene	NA	NA	NA
Benzo(g,h,i)perylene	NA	NA	NA
Benzo(k)fluoranthene	NA	NA	NA
Chrysene	NA	NA	NA
Ethylbenzene	NA	NA	NA
Fluoranthene	NA	NA	NA
Indeno(1,2,3-cd)Pyrene	NA	NA	NA
Napthalene	1.00	1.00	<0.005
Phenanthrene	NA	NA	NA
Pyrene	NA	NA	NA
Toluene	NA	NA	NA
Xylenes	NA	NA	NA

NA = Correlation Coeficient, R, does not exceed 80%

APPENDIX C

PHOTOGRAPHS

A

B

Vegetation Survey and Analysis
CSX Vaughn Landfill, Greenville, SC

Photographs A & B

Environmental Corporation of America

ECA Project # 6-576-1

Form 118- 11/6/91

C

D

Vegetation Survey and Analysis
CSX Vaughn Landfill, Greenville, SC

Photographs C & D

Environmental Corporation of America

ECA Project # 6-576-1

Form 118- 11/6/91

G

Notes

APPENDIX G

LABORATORY ANALYTICAL RESULTS

G 1

G-1

DATA SUMMARIES

ANALYTICAL TECHNOLOGIES, INC. 11 East Olive Road Pensacola, Florida 32514 (904) 474-1001

"Method Report Summary"

Accession Number: 603261
Client: CSX TRANSPORTATION
Project Number: 4365B
Project Name: CSX GREENVILLE
Project Location: GREENVILLE, SC
Test: SW 846 8260 TABLE SIX

Client Sample Id:	Parameter:	Unit:	Result:
FD 1	NAPHTHALENE	UG/L	9
NB8	BENZENE	UG/KG	6500
	ETHYL BENZENE	UG/KG	11000
	NAPHTHALENE	UG/KG	990000
	STYRENE	UG/KG	4100
	TOLUENE	UG/KG	17000
	1,2,4-TRIMETHYLBENZENE	UG/KG	16000
	1,3,5-TRIMETHYLBENZENE	UG/KG	5400
	M,P-XYLENE	UG/KG	22000
	O-XYLENE	UG/KG	10000

ANALYTICAL TECHNOLOGIES, INC. 11 East Olive Road Pensacola, Florida 32514 (904) 474-1001

"Method Report Summary"

Accession Number: 603261
Client: CSX TRANSPORTATION
Project Number: 4365B
Project Name: CSX GREENVILLE
Project Location: GREENVILLE, SC
Test: BN EXTRACTABLES (8270)

Client Sample Id:	Parameter:	Unit:	Result:
REEDY 1	DI-N-BUTYLPHTHALATE	UG/L	90
REEDY 2	BUTYLBENZYLPHTHALATE	UG/L	20
	DI-N-BUTYLPHTHALATE	UG/L	120
WD 1	BUTYLBENZYLPHTHALATE	UG/L	29
	DI-N-BUTYLPHTHALATE	UG/L	100
FD 1	BUTYLBENZYLPHTHALATE	UG/L	38
	DI-N-BUTYLPHTHALATE	UG/L	82
NB8	ACENAPHTHENE	UG/KG	600000
	ANTHRACENE	UG/KG	1400000
	BENZO(a)ANTHRACENE	UG/KG	1000000
	BENZO(a)PYRENE	UG/KG	780000
	BENZO(b)FLUORANTHENE	UG/KG	460000
	BENZO(g,h,i)PERYLENE	UG/KG	380000
	BENZO(k)FLUORANTHENE	UG/KG	700000
	CHRYSENE	UG/KG	980000
	DIBENZ(A,J)ACRIDINE	UG/KG	800000
	FLUORANTHENE	UG/KG	2000000
	FLUORENE	UG/KG	1700000
	INDENO(1,2,3-cd)PYRENE	UG/KG	340000
	2-METHYLNAPHTHALENE	UG/KG	3200000
	NAPHTHALENE	UG/KG	5800000
	PHENANTHRENE	UG/KG	3800000
	PYRENE	UG/KG	2600000

ANALYTICAL TECHNOLOGIES, INC. 11 East Olive Road Pensacola, Florida 32514 (904) 474-1001

"Method Report Summary"

Accession Number: 603602
Client: CSX TRANSPORTATION
Project Number: 4365B
Project Name: CSXT-GREENVILLE
Project Location: GREENVILLE, SC
Test: SW 846 8260 TABLE SIX

Client Sample Id:	Parameter:	Unit:	Result:
DP 26	TRICHLOROETHENE	UG/KG	94
DP 28	BENZENE	UG/KG	7
	NAPHTHALENE	UG/KG	20
	STYRENE	UG/KG	34
DP 29	NAPHTHALENE	UG/KG	210
DP 9	NAPHTHALENE	UG/KG	69

"Method Report Summary"

Accession Number: 603602
Client: CSX TRANSPORTATION
Project Number: 4365B
Project Name: CSXT-GREENVILLE
Project Location: GREENVILLE, SC
Test: BN EXTRACTABLES (8270)

Client Sample Id:	Parameter:	Unit:	Result:
DP 29	BENZO(b)FLUORANTHENE	UG/KG	62000
	BENZO(k)FLUORANTHENE	UG/KG	72000
	CHRYSENE	UG/KG	53000
DP 9	ACENAPHTHYLENE	UG/KG	7900
	BENZO(a)ANTHRACENE	UG/KG	12000
	BENZO(a)PYRENE	UG/KG	20000
	BENZO(b)FLUORANTHENE	UG/KG	14000
	BENZO(g,h,i)PERYLENE	UG/KG	15000
	BENZO(k)FLUORANTHENE	UG/KG	17000
	CHRYSENE	UG/KG	14000
	FLUORANTHENE	UG/KG	22000
	INDENO(1,2,3-cd)PYRENE	UG/KG	15000
	PHENANTHRENE	UG/KG	15000
	PYRENE	UG/KG	19000

"Method Report Summary"

Accession Number: 603254
Client: CSX TRANSPORTATION
Project Number: 4365B
Project Name: CSX GREENVILLE
Project Location: GREENVILLE, SC
Test: BN EXTRACTABLES (8270)

Client Sample Id:	Parameter:	Unit:	Result:
MW-1	ACENAPHTHENE	UG/L	700
	FLUORENE	UG/L	270
	2-METHYLNAPHTHALENE	UG/L	1800
	NAPHTHALENE	UG/L	4600
	PHENANTHRENE	UG/L	240
MW-3	ACENAPHTHENE	UG/L	120
	ACENAPHTHYLENE	UG/L	570
	FLUORENE	UG/L	180
	2-METHYLNAPHTHALENE	UG/L	820
	NAPHTHALENE	UG/L	3000
	PHENANTHRENE	UG/L	230
MW-3D	2-METHYLNAPHTHALENE	UG/L	1800
	NAPHTHALENE	UG/L	8300
MW-5	NAPHTHALENE	UG/L	12
MW-6	ACENAPHTHENE	UG/L	150
	ACENAPHTHYLENE	UG/L	360
	ANTHRACENE	UG/L	120
	DIBENZOFURAN	UG/L	220
	FLUORANTHENE	UG/L	130
	FLUORENE	UG/L	250
	2-METHYLNAPHTHALENE	UG/L	330
	NAPHTHALENE	UG/L	1800
	PHENANTHRENE	UG/L	360
	PYRENE	UG/L	97
MW-7	2-METHYLNAPHTHALENE	UG/L	130
	NAPHTHALENE	UG/L	1900
DP1A	ACENAPHTHENE	UG/KG	20000
	ANTHRACENE	UG/KG	15000
	BENZO(a)ANTHRACENE	UG/KG	14000
	BENZO(a)PYRENE	UG/KG	12000
	BENZO(b)FLUORANTHENE	UG/KG	9100
	BENZO(g,h,i)PERYLENE	UG/KG	7500
	BENZO(k)FLUORANTHENE	UG/KG	9600
	CHRYSENE	UG/KG	13000
	DIBENZOFURAN	UG/KG	15000
	FLUORANTHENE	UG/KG	32000
	FLUORENE	UG/KG	17000
	INDENO(1,2,3-cd)PYRENE	UG/KG	6700
	2-METHYLNAPHTHALENE	UG/KG	13000
	NAPHTHALENE	UG/KG	48000
	PHENANTHRENE	UG/KG	44000
	PYRENE	UG/KG	30000
NB1	BENZO(a)ANTHRACENE	UG/KG	780
	BENZO(a)PYRENE	UG/KG	600

ANALYTICAL TECHNOLOGIES, INC. 11 East Olive Road Pensacola, Florida 32514 (904) 474-1001

"Method Report Summary"

Accession Number: 603254
Client: CSX TRANSPORTATION
Project Number: 4365B
Project Name: CSX GREENVILLE
Project Location: GREENVILLE, SC
Test: BN EXTRACTABLES (8270)

Client Sample Id:	Parameter:	Unit:	Result:
N01	BENZO(b)FLUORANTHENE	UG/KG	670
	BENZO(g,h,i)PERYLENE	UG/KG	490
	BENZO(k)FLUORANTHENE	UG/KG	630
	CHRYSENE	UG/KG	890
	FLUORANTHENE	UG/KG	2000
	INDENO(1,2,3-cd)PYRENE	UG/KG	460
	PHENANTHRENE	UG/KG	1800
	PYRENE	UG/KG	1700

"Method Report Summary"

Accession Number: 603254
Client: CSX TRANSPORTATION
Project Number: 4365B
Project Name: CSX GREENVILLE
Project Location: GREENVILLE, SC
Test: SW 846 8260 TABLE SIX

Client Sample Id:	Parameter:	Unit:	Result:
MW-1	NAPHTHALENE	UG/L	3800
MW-3	BENZENE	UG/L	160
	ETHYL BENZENE	UG/L	100
	NAPHTHALENE	UG/L	15000
	STYRENE	UG/L	50
	TOLUENE	UG/L	140
	1,2,4-TRIMETHYLBENZENE	UG/L	50
	1,3,5-TRIMETHYLBENZENE	UG/L	17
	M,P-XYLENE	UG/L	100
	O-XYLENE	UG/L	48
MW-3D	BENZENE	UG/L	1100
	ETHYL BENZENE	UG/L	380
	ISOPROPYL BENZENE	UG/L	9
	NAPHTHALENE	UG/L	9300
	STYRENE	UG/L	14
	TOLUENE	UG/L	160
	1,2,4-TRIMETHYLBENZENE	UG/L	82
	1,3,5-TRIMETHYLBENZENE	UG/L	24
	M,P-XYLENE	UG/L	210
	O-XYLENE	UG/L	120
MW-5	NAPHTHALENE	UG/L	9
MW-6	NAPHTHALENE	UG/L	390
	TOLUENE	UG/L	7
	1,2,4-TRIMETHYLBENZENE	UG/L	8
	M,P-XYLENE	UG/L	10
MW-7	BENZENE	UG/L	680
	NAPHTHALENE	UG/L	2400
DP1A	NAPHTHALENE	UG/KG	79000
	M,P-XYLENE	UG/KG	1300

ANALYTICAL TECHNOLOGIES, INC. 11 East Olive Road Pensacola, Florida 32514 (904) 474-1001

"Method Report Summary"

Accession Number: 603254
Client: CSX TRANSPORTATION
Project Number: 4365B
Project Name: CSX GREENVILLE
Project Location: GREENVILLE, SC
Test: Group of Single Wetchem

Client Sample Id:	Parameter:	Unit:	Result:
MW-3	SULFATE (375.4)	MG/L	640
MW-3D	SULFATE (375.4)	MG/L	35
MW-6	SULFATE (375.4)	MG/L	160

"Method Report Summary"

Accession Number: 603312
Client: CSX TRANSPORTATION
Project Number: 4365B
Project Name: GREENVILLE, SC
Project Location: GREENVILLE, SC
Test: BN EXTRACTABLES (8270)

Client Sample Id:	Parameter:	Unit:	Result:
LF-024-2	FLUORANTHENE	UG/KG	510
	PHENANTHRENE	UG/KG	470
	PYRENE	UG/KG	450
WW-10	BENZO(a)ANTHRACENE	UG/KG	2700
	BENZO(a)PYRENE	UG/KG	1900
	BENZO(b)FLUORANTHENE	UG/KG	3100
	BENZO(g,h,i)PERYLENE	UG/KG	2500
	BENZO(k)FLUORANTHENE	UG/KG	2300
	CHRYSENE	UG/KG	2800
	FLUORANTHENE	UG/KG	4400
	INDENO(1,2,3-cd)PYRENE	UG/KG	2100
	PHENANTHRENE	UG/KG	1300
	PYRENE	UG/KG	4000
WW-11	BENZO(a)PYRENE	UG/KG	12000
	CHRYSENE	UG/KG	11000
	FLUORANTHENE	UG/KG	20000
	PYRENE	UG/KG	17000

"Method Report Summary"

Accession Number: 603312
Client: CSX TRANSPORTATION
Project Number: 4365B
Project Name: GREENVILLE, SC
Project Location: GREENVILLE, SC
Test: SW 846 8260 TABLE SIX

Client Sample Id:	Parameter:	Unit:	Result:
WW-10	NAPHTHALENE	UG/KG	130
G-TANK 1	CHLOROETHANE	UG/L	22
	1,1-DICHLOROETHANE	UG/L	15
	M,P-XYLENE	UG/L	11
	O-XYLENE	UG/L	7

AMERICAN ENVIRONMENTAL NETWORK 11 East Olive Road Pensacola, Florida 32514 (904) 474-1001

"Method Report Summary"

Accession Number: 604535
Client: CSX TRANSPORTATION
Project Number: 4365B
Project Name: VAUGHN LANDFILL
Project Location: CSXT9415585
Test: BN EXTRACTABLES (8270)

Client Sample Id:	Parameter:	Unit:	Result:
WW13	ACENAPHTHYLENE	UG/KG	13000
	BENZO(a)ANTHRACENE	UG/KG	33000
	BENZO(a)PYRENE	UG/KG	32000
	BENZO(b)FLUORANTHENE	UG/KG	24000
	BENZO(g,h,i)PERYLENE	UG/KG	19000
	BENZO(k)FLUORANTHENE	UG/KG	36000
	CHRYSENE	UG/KG	32000
	FLUORANTHENE	UG/KG	52000
	INDENO(1,2,3-cd)PYRENE	UG/KG	17000
	PHENANTHRENE	UG/KG	37000
	PYRENE	UG/KG	73000

ANALYTICAL TECHNOLOGIES, INC. 11 East Olive Road Pensacola, Florida 32514 (904) 474-1001

"Method Report Summary"

Accession Number: 603312
Client: CSX TRANSPORTATION
Project Number: 4365B
Project Name: GREENVILLE, SC
Project Location: GREENVILLE, SC
Test: RCRA METALS

Client Sample Id:	Parameter:	Unit:	Result:
LF-024-2	ARSENIC (6010)	MG/KG	6
	BARIUM (6010)	MG/KG	190
	CHROMIUM (6010)	MG/KG	42
	LEAD (6010)	MG/KG	21

G-2

G-2

ANALYTICAL RESULTS

ANALYTICAL TECHNOLOGIES, INC. 11 East Olive Road Pensacola, Florida 32514 (904) 474-1001

Analysis Report

Analysis: SW 846 8260 TABLE SIX

Accession:	603261
Client:	CSX TRANSPORTATION
Project Number:	4365B
Project Name:	CSX GREENVILLE
Project Location:	GREENVILLE, SC
Department:	ORGANIC/MS

ANALYTICAL TECHNOLOGIES, INC. 11 East Olive Road Pensacola, Florida 32514 (904) 474-1001

"FINAL REPORT FORMAT - SINGLE"

Accession: 603261
Client: CSX TRANSPORTATION
Project Number: 4365B
Project Name: CSX GREENVILLE
Project Location: GREENVILLE, SC
Test: SW 846 8260 TABLE SIX
Analysis Method: 8260 / SW-846, 3rd Edition, September 1986 and Rev. 1, July 1992.
Extraction Method: N/A
Matrix: SURFACE WATER
QC Level: II

Lab Id: 001
Client Sample Id: REEDY 1
Sample Date/Time: 14-MAR-96 1440
Received Date: 15-MAR-96

Batch: MAW025
Blank: C
Dry Weight %: N/A
Extraction Date: N/A
Analysis Date: 23-MAR-96

Parameter:	Units:	Results:	Rpt Lmts:	Q:
BENZENE	UG/L	ND	5	
BROMOBENZENE	UG/L	ND	5	
BROMOCHLOROMETHANE	UG/L	ND	5	
BROMODICHLOROMETHANE	UG/L	ND	5	
BROMOFORM	UG/L	ND	5	
BROMOMETHANE	UG/L	ND	5	
CARBON TETRACHLORIDE	UG/L	ND	5	
CHLOROBENZENE	UG/L	ND	5	
CHLOROETHANE	UG/L	ND	5	
CHLOROFORM	UG/L	ND	5	
CHLOROMETHANE	UG/L	ND	5	
2-CHLOROTOLUENE	UG/L	ND	5	
4-CHLOROTOLUENE	UG/L	ND	5	
CIS 1,2 DICHLOROETHYLENE	UG/L	ND	5	
CHLORODIBROMOMETHANE	UG/L	ND	5	
DIBROMOMETHANE	UG/L	ND	5	
1,4-DICHLOROBENZENE	UG/L	ND	5	
1,3-DICHLOROBENZENE	UG/L	ND	5	
1,2-DICHLOROBENZENE	UG/L	ND	5	
DICHLORODIFLUOROMETHANE	UG/L	ND	5	
1,1-DICHLOROETHANE	UG/L	ND	5	
1,2-DICHLOROETHANE	UG/L	ND	5	
1,1-DICHLOROETHENE	UG/L	ND	5	
1,3 DICHLOROPROPANE	UG/L	ND	5	
2,2-DICHLOROPROPANE	UG/L	ND	5	
1,2-DICHLOROPROPANE	UG/L	ND	5	
CIS-1,3-DICHLOROPROPENE	UG/L	ND	5	
TRANS-1,3-DICHLOROPROPENE	UG/L	ND	5	
1,1 DICHLOROPROPENE	UG/L	ND	5	
ETHYL BENZENE	UG/L	ND	5	
HEXACHLOROBUTADIENE	UG/L	ND	5	
ISOPROPYL BENZENE	UG/L	ND	5	
P-ISOPROPYLTOLUENE	UG/L	ND	5	
METHYLENE CHLORIDE	UG/L	ND	5	
NAPHTHALENE	UG/L	ND	5	
N-BUTYL BENZENE	UG/L	ND	5	
N-PROPYL BENZENE	UG/L	ND	5	
SEC-BUTYL BENZENE	UG/L	ND	5	
STYRENE	UG/L	ND	5	
TERT-BUTYL BENZENE	UG/L	ND	5	

ANALYTICAL TECHNOLOGIES, INC. 11 East Olive Road Pensacola, Florida 32514 (904) 474-1001

"FINAL REPORT FORMAT - SINGLE"

Accession: 603261
Client: CSX TRANSPORTATION
Project Number: 4365B
Project Name: CSX GREENVILLE
Project Location: GREENVILLE, SC
Test: SW 846 8260 TABLE SIX
Analysis Method: 8260 / SW-846, 3rd Edition, September 1986 and Rev. 1, July 1992.
Extraction Method: N/A
Matrix: SURFACE WATER
QC Level: II

Lab Id: 001
Client Sample Id: REEDY 1
Sample Date/Time: 14-MAR-96 1440
Received Date: 15-MAR-96

Parameter:	Units:	Results:	Rpt Lmts:	Q:
1,1,1,2-TETRACHLOROETHANE	UG/L	ND	5	
1,1,2,2-TETRACHLOROETHANE	UG/L	ND	5	
TETRACHLOROETHENE	UG/L	ND	5	
TOLUENE	UG/L	ND	5	
TRANS 1,2 DICHLOROETHYLENE	UG/L	ND	5	
1,1,1-TRICHLOROETHANE	UG/L	ND	5	
1,1,2-TRICHLOROETHANE	UG/L	ND	5	
1,2,3 TRICHLOROBENZENE	UG/L	ND	5	
1,2,4 TRICHLOROBENZENE	UG/L	ND	5	
TRICHLOROETHENE	UG/L	ND	5	
TRICHLOROFLUOROMETHANE	UG/L	ND	5	
1,2,3 TRICHLOROPROPANE	UG/L	ND	5	
1,2,4-TRIMETHYLBENZENE	UG/L	ND	5	
1,3,5-TRIMETHYLBENZENE	UG/L	ND	5	
VINYL CHLORIDE	UG/L	ND	5	
M,P-XYLENE	UG/L	ND	5	
O-XYLENE	UG/L	ND	5	
DIBROMOFLUOROMETHANE	%REC/SURR	98	74-124	
TOLUENE-D8	%REC/SURR	101	61-128	
BROMOFLUOROBENZENE	%REC/SURR	100	65-138	
ANALYST	INITIALS	LL		

Comments:

"FINAL REPORT FORMAT - SINGLE"

Accession: 603261
Client: CSX TRANSPORTATION
Project Number: 4365B
Project Name: CSX GREENVILLE
Project Location: GREENVILLE, SC
Test: SW 846 8260 TABLE SIX
Analysis Method: 8260 / SW-846, 3rd Edition, September 1986 and Rev. 1, July 1992.
Extraction Method: N/A
Matrix: SURFACE WATER
QC Level: II

Lab Id: 002
Client Sample Id: REEDY 2
Sample Date/Time: 14-MAR-96 1500
Received Date: 15-MAR-96

Batch: MAW025
Blank: C
Dry Weight %: N/A
Extraction Date: N/A
Analysis Date: 23-MAR-96

Parameter:	Units:	Results:	Rpt Lmts:	Q:
BENZENE	UG/L	ND	5	
BROMOBENZENE	UG/L	ND	5	
BROMOCHLOROMETHANE	UG/L	ND	5	
BROMODICHLOROMETHANE	UG/L	ND	5	
BROMOFORM	UG/L	ND	5	
BROMOMETHANE	UG/L	ND	5	
CARBON TETRACHLORIDE	UG/L	ND	5	
CHLOROBENZENE	UG/L	ND	5	
CHLOROETHANE	UG/L	ND	5	
CHLOROFORM	UG/L	ND	5	
CHLOROMETHANE	UG/L	ND	5	
2-CHLOROTOLUENE	UG/L	ND	5	
4-CHLOROTOLUENE	UG/L	ND	5	
CIS 1,2 DICHLOROETHYLENE	UG/L	ND	5	
CHLORODIBROMOMETHANE	UG/L	ND	5	
DIBROMOMETHANE	UG/L	ND	5	
1,4-DICHLOROBENZENE	UG/L	ND	5	
1,3-DICHLOROBENZENE	UG/L	ND	5	
1,2-DICHLOROBENZENE	UG/L	ND	5	
DICHLORODIFLUOROMETHANE	UG/L	ND	5	
1,1-DICHLOROETHANE	UG/L	ND	5	
1,2-DICHLOROETHANE	UG/L	ND	5	
1,1-DICHLOROETHENE	UG/L	ND	5	
1,3 DICHLOROPROPANE	UG/L	ND	5	
2,2-DICHLOROPROPANE	UG/L	ND	5	
1,2-DICHLOROPROPANE	UG/L	ND	5	
CIS-1,3-DICHLOROPROPENE	UG/L	ND	5	
TRANS-1,3-DICHLOROPROPENE	UG/L	ND	5	
1,1 DICHLOROPROPENE	UG/L	ND	5	
ETHYL BENZENE	UG/L	ND	5	
HEXACHLOROBUTADIENE	UG/L	ND	5	
ISOPROPYL BENZENE	UG/L	ND	5	
P-ISOPROPYLTOLUENE	UG/L	ND	5	
METHYLENE CHLORIDE	UG/L	ND	5	
NAPHTHALENE	UG/L	ND	5	
N-BUTYL BENZENE	UG/L	ND	5	
N-PROPYL BENZENE	UG/L	ND	5	
SEC-BUTYL BENZENE	UG/L	ND	5	
STYRENE	UG/L	ND	5	
TERT-BUTYL BENZENE	UG/L	ND	5	

ANALYTICAL TECHNOLOGIES, INC. 11 East Olive Road Pensacola, Florida 32514 (904) 474-1001

"FINAL REPORT FORMAT - SINGLE"

Accession: 603261
Client: CSX TRANSPORTATION
Project Number: 4365B
Project Name: CSX GREENVILLE
Project Location: GREENVILLE, SC
Test: SW 846 8260 TABLE SIX
Analysis Method: 8260 / SW-846, 3rd Edition, September 1986 and Rev. 1, July 1992.
Extraction Method: N/A
Matrix: SURFACE WATER
QC Level: II

Lab Id: 002
Client Sample Id: REEDY 2
Sample Date/Time: 14-MAR-96 1500
Received Date: 15-MAR-96

Parameter:	Units:	Results:	Rpt Lmts:	Q:
1,1,1,2-TETRACHLOROETHANE	UG/L	ND	5	
1,1,2,2-TETRACHLOROETHANE	UG/L	ND	5	
TETRACHLOROETHENE	UG/L	ND	5	
TOLUENE	UG/L	ND	5	
TRANS 1,2 DICHLOROETHYLENE	UG/L	ND	5	
1,1,1-TRICHLOROETHANE	UG/L	ND	5	
1,1,2-TRICHLOROETHANE	UG/L	ND	5	
1,2,3 TRICHLOROBENZENE	UG/L	ND	5	
1,2,4 TRICHLOROBENZENE	UG/L	ND	5	
TRICHLOROETHENE	UG/L	ND	5	
TRICHLOROFLUOROMETHANE	UG/L	ND	5	
1,2,3 TRICHLOROPROPANE	UG/L	ND	5	
1,2,4-TRIMETHYLBENZENE	UG/L	ND	5	
1,3,5-TRIMETHYLBENZENE	UG/L	ND	5	
VINYL CHLORIDE	UG/L	ND	5	
M,P-XYLENE	UG/L	ND	5	
O-XYLENE	UG/L	ND	5	
DIBROMOFLUOROMETHANE	%REC/SURR	99	74-124	
TOLUENE-D8	%REC/SURR	100	61-128	
BROMOFLUOROBENZENE	%REC/SURR	99	65-138	
ANALYST	INITIALS	LL		

Comments:

"FINAL REPORT FORMAT - SINGLE"

Accession: 603261
Client: CSX TRANSPORTATION
Project Number: 4365B
Project Name: CSX GREENVILLE
Project Location: GREENVILLE, SC
Test: SW 846 8260 TABLE SIX
Analysis Method: 8260 / SW-846, 3rd Edition, September 1986 and Rev. 1, July 1992.
Extraction Method: N/A
Matrix: SURFACE WATER
QC Level: II

Lab Id: 003
Client Sample Id: WD 1
Sample Date/Time: 14-MAR-96 1520
Received Date: 15-MAR-96

Batch: MAW025
Blank: C
Dry Weight %: N/A
Extraction Date: N/A
Analysis Date: 23-MAR-96

Parameter:	Units:	Results:	Rpt Lmts:	Q:
BENZENE	UG/L	ND	5	
BROMOBENZENE	UG/L	ND	5	
BROMOCHLOROMETHANE	UG/L	ND	5	
BROMODICHLOROMETHANE	UG/L	ND	5	
BROMOFORM	UG/L	ND	5	
BROMOMETHANE	UG/L	ND	5	
CARBON TETRACHLORIDE	UG/L	ND	5	
CHLOROBENZENE	UG/L	ND	5	
CHLOROETHANE	UG/L	ND	5	
CHLOROFORM	UG/L	ND	5	
CHLOROMETHANE	UG/L	ND	5	
2-CHLOROTOLUENE	UG/L	ND	5	
4-CHLOROTOLUENE	UG/L	ND	5	
CIS 1,2 DICHLOROETHYLENE	UG/L	ND	5	
CHLORODIBROMOMETHANE	UG/L	ND	5	
DIBROMOMETHANE	UG/L	ND	5	
1,4-DICHLOROBENZENE	UG/L	ND	5	
1,3-DICHLOROBENZENE	UG/L	ND	5	
1,2-DICHLOROBENZENE	UG/L	ND	5	
DICHLORODIFLUOROMETHANE	UG/L	ND	5	
1,1-DICHLOROETHANE	UG/L	ND	5	
1,2-DICHLOROETHANE	UG/L	ND	5	
1,1-DICHLOROETHENE	UG/L	ND	5	
1,3 DICHLOROPROPANE	UG/L	ND	5	
2,2-DICHLOROPROPANE	UG/L	ND	5	
1,2-DICHLOROPROPANE	UG/L	ND	5	
CIS-1,3-DICHLOROPROPENE	UG/L	ND	5	
TRANS-1,3-DICHLOROPROPENE	UG/L	ND	5	
1,1 DICHLOROPROPENE	UG/L	ND	5	
ETHYL BENZENE	UG/L	ND	5	
HEXACHLOROBUTADIENE	UG/L	ND	5	
ISOPROPYL BENZENE	UG/L	ND	5	
P-ISOPROPYLTOLUENE	UG/L	ND	5	
METHYLENE CHLORIDE	UG/L	ND	5	
NAPHTHALENE	UG/L	ND	5	
N-BUTYL BENZENE	UG/L	ND	5	
N-PROPYL BENZENE	UG/L	ND	5	
SEC-BUTYL BENZENE	UG/L	ND	5	
STYRENE	UG/L	ND	5	
TERT-BUTYL BENZENE	UG/L	ND	5	

"FINAL REPORT FORMAT - SINGLE"

Accession: 603261
Client: CSX TRANSPORTATION
Project Number: 4365B
Project Name: CSX GREENVILLE
Project Location: GREENVILLE, SC
Test: SW 846 8260 TABLE SIX
Analysis Method: 8260 / SW-846, 3rd Edition, September 1986 and Rev. 1, July 1992.
Extraction Method: N/A
Matrix: SURFACE WATER
QC Level: II

Lab Id: 003
Client Sample Id: WD 1
Sample Date/Time: 14-MAR-96 1520
Received Date: 15-MAR-96

Parameter:	Units:	Results:	Rpt Lmts:	Q:
1,1,1,2-TETRACHLOROETHANE	UG/L	ND	5	
1,1,2,2-TETRACHLOROETHANE	UG/L	ND	5	
TETRACHLOROETHENE	UG/L	ND	5	
TOLUENE	UG/L	ND	5	
TRANS 1,2 DICHLOROETHYLENE	UG/L	ND	5	
1,1,1-TRICHLOROETHANE	UG/L	ND	5	
1,1,2-TRICHLOROETHANE	UG/L	ND	5	
1,2,3 TRICHLOROBENZENE	UG/L	ND	5	
1,2,4 TRICHLOROBENZENE	UG/L	ND	5	
TRICHLOROETHENE	UG/L	ND	5	
TRICHLOROFLUOROMETHANE	UG/L	ND	5	
1,2,3 TRICHLOROPROPANE	UG/L	ND	5	
1,2,4-TRIMETHYLBENZENE	UG/L	ND	5	
1,3,5-TRIMETHYLBENZENE	UG/L	ND	5	
VINYL CHLORIDE	UG/L	ND	5	
M,P-XYLENE	UG/L	ND	5	
O-XYLENE	UG/L	ND	5	
DIBROMOFLUOROMETHANE	%REC/SURR	103	74-124	
TOLUENE-D8	%REC/SURR	99	61-128	
BROMOFLUOROBENZENE	%REC/SURR	104	65-138	
ANALYST	INITIALS	LL		

Comments:

"FINAL REPORT FORMAT - SINGLE"

Accession: 603261
Client: CSX TRANSPORTATION
Project Number: 4365B
Project Name: CSX GREENVILLE
Project Location: GREENVILLE, SC
Test: SW 846 8260 TABLE SIX
Analysis Method: 8260 / SW-846, 3rd Edition, September 1986 and Rev. 1, July 1992.
Extraction Method: N/A
Matrix: SURFACE WATER
QC Level: II

Lab Id: 004 Sample Date/Time: 14-MAR-96 1530
Client Sample Id: FD 1 Received Date: 15-MAR-96

Batch: MAW025 Extraction Date: N/A
Blank: C Dry Weight %: N/A Analysis Date: 23-MAR-96

Parameter:	Units:	Results:	Rpt Lmts:	Q:
BENZENE	UG/L	ND	5	
BROMOBENZENE	UG/L	ND	5	
BROMOCHLOROMETHANE	UG/L	ND	5	
BROMODICHLOROMETHANE	UG/L	ND	5	
BROMOFORM	UG/L	ND	5	
BROMOMETHANE	UG/L	ND	5	
CARBON TETRACHLORIDE	UG/L	ND	5	
CHLOROBENZENE	UG/L	ND	5	
CHLOROETHANE	UG/L	ND	5	
CHLOROFORM	UG/L	ND	5	
CHLOROMETHANE	UG/L	ND	5	
2-CHLOROTOLUENE	UG/L	ND	5	
4-CHLOROTOLUENE	UG/L	ND	5	
CIS 1,2 DICHLOROETHYLENE	UG/L	ND	5	
CHLORODIBROMOMETHANE	UG/L	ND	5	
DIBROMOMETHANE	UG/L	ND	5	
1,4-DICHLOROBENZENE	UG/L	ND	5	
1,3-DICHLOROBENZENE	UG/L	ND	5	
1,2-DICHLOROBENZENE	UG/L	ND	5	
DICHLORODIFLUOROMETHANE	UG/L	ND	5	
1,1-DICHLOROETHANE	UG/L	ND	5	
1,2-DICHLOROETHANE	UG/L	ND	5	
1,1-DICHLOROETHENE	UG/L	ND	5	
1,3 DICHLOROPROPANE	UG/L	ND	5	
2,2-DICHLOROPROPANE	UG/L	ND	5	
1,2-DICHLOROPROPANE	UG/L	ND	5	
CIS-1,3-DICHLOROPROPENE	UG/L	ND	5	
TRANS-1,3-DICHLOROPROPENE	UG/L	ND	5	
1,1 DICHLOROPROPENE	UG/L	ND	5	
ETHYL BENZENE	UG/L	ND	5	
HEXACHLOROBUTADIENE	UG/L	ND	5	
ISOPROPYL BENZENE	UG/L	ND	5	
P-ISOPROPYLTOLUENE	UG/L	ND	5	
METHYLENE CHLORIDE	UG/L	ND	5	
NAPHTHALENE	UG/L	9	5	
N-BUTYL BENZENE	UG/L	ND	5	
N-PROPYL BENZENE	UG/L	ND	5	
SEC-BUTYL BENZENE	UG/L	ND	5	
STYRENE	UG/L	ND	5	
TERT-BUTYL BENZENE	UG/L	ND	5	

ANALYTICAL TECHNOLOGIES, INC. 11 East Olive Road Pensacola, Florida 32514 (904) 474-1001

"FINAL REPORT FORMAT - SINGLE"

Accession: 603261
Client: CSX TRANSPORTATION
Project Number: 4365B
Project Name: CSX GREENVILLE
Project Location: GREENVILLE, SC
Test: SW 846 8260 TABLE SIX
Analysis Method: 8260 / SW-846, 3rd Edition, September 1986 and Rev. 1, July 1992.
Extraction Method: N/A
Matrix: SURFACE WATER
QC Level: II

Lab Id: 004
Client Sample Id: FD 1
Sample Date/Time: 14-MAR-96 1530
Received Date: 15-MAR-96

Parameter:	Units:	Results:	Rpt Lmts:	Q:
1,1,1,2-TETRACHLOROETHANE	UG/L	ND	5	
1,1,2,2-TETRACHLOROETHANE	UG/L	ND	5	
TETRACHLOROETHENE	UG/L	ND	5	
TOLUENE	UG/L	ND	5	
TRANS 1,2 DICHLOROETHYLENE	UG/L	ND	5	
1,1,1-TRICHLOROETHANE	UG/L	ND	5	
1,1,2-TRICHLOROETHANE	UG/L	ND	5	
1,2,3 TRICHLOROBENZENE	UG/L	ND	5	
1,2,4 TRICHLOROBENZENE	UG/L	ND	5	
TRICHLOROETHENE	UG/L	ND	5	
TRICHLOROFLUOROMETHANE	UG/L	ND	5	
1,2,3 TRICHLOROPROPANE	UG/L	ND	5	
1,2,4-TRIMETHYLBENZENE	UG/L	ND	5	
1,3,5-TRIMETHYLBENZENE	UG/L	ND	5	
VINYL CHLORIDE	UG/L	ND	5	
M,P-XYLENE	UG/L	ND	5	
O-XYLENE	UG/L	ND	5	
DIBROMOFLUOROMETHANE	%REC/SURR	99	74-124	
TOLUENE-D8	%REC/SURR	102	61-128	
BROMOFLUOROBENZENE	%REC/SURR	104	65-138	
ANALYST	INITIALS	LL		

Comments:

"FINAL REPORT FORMAT - SINGLE"

Accession: 603261
Client: CSX TRANSPORTATION
Project Number: 4365B
Project Name: CSX GREENVILLE
Project Location: GREENVILLE, SC
Test: SW 846 8260 TABLE SIX
Analysis Method: 8260 / SW-846, 3rd Edition, September 1986 and Rev. 1, July 1992.
Extraction Method: 8260 / SW-846, 3rd Edition, September 1986 and Rev. 1, July 1992.
Matrix: SOIL
QC Level: II

Lab Id: 005 Sample Date/Time: 14-MAR-96 0900
Client Sample Id: NB8 Received Date: 15-MAR-96

Batch: MAS026 Extraction Date: 25-MAR-96
Blank: A Dry Weight %: 50 Analysis Date: 25-MAR-96

Parameter:	Units:	Results:	Rpt Lmts:	Q:
BENZENE	UG/KG	6500	2000	
BROMOBENZENE	UG/KG	ND	2000	
BROMOCHLOROMETHANE	UG/KG	ND	2000	
BROMODICHLOROMETHANE	UG/KG	ND	2000	
BROMOFORM	UG/KG	ND	2000	
BROMOMETHANE	UG/KG	ND	2000	
CARBON TETRACHLORIDE	UG/KG	ND	2000	
CHLOROBENZENE	UG/KG	ND	2000	
CHLOROETHANE	UG/KG	ND	2000	
CHLOROFORM	UG/KG	ND	2000	
CHLOROMETHANE	UG/KG	ND	2000	
2-CHLOROTOLUENE	UG/KG	ND	2000	
4-CHLOROTOLUENE	UG/KG	ND	2000	
CIS 1,2 DICHLOROETHYLENE	UG/KG	ND	2000	
CHLORODIBROMOMETHANE	UG/KG	ND	2000	
DIBROMOMETHANE	UG/KG	ND	2000	
1,4-DICHLOROBENZENE	UG/KG	ND	2000	
1,3-DICHLOROBENZENE	UG/KG	ND	2000	
1,2-DICHLOROBENZENE	UG/KG	ND	2000	
DICHLORODIFLUOROMETHANE	UG/KG	ND	2000	
1,1-DICHLOROETHANE	UG/KG	ND	2000	
1,2-DICHLOROETHANE	UG/KG	ND	2000	
1,1-DICHLOROETHENE	UG/KG	ND	2000	
1,3 DICHLOROPROPANE	UG/KG	ND	2000	
2,2-DICHLOROPROPANE	UG/KG	ND	2000	
1,2-DICHLOROPROPANE	UG/KG	ND	2000	
CIS-1,3-DICHLOROPROPENE	UG/KG	ND	2000	
TRANS-1,3-DICHLOROPROPENE	UG/KG	ND	2000	
1,1 DICHLOROPROPENE	UG/KG	ND	2000	
ETHYL BENZENE	UG/KG	11000	2000	
HEXACHLOROBUTADIENE	UG/KG	ND	2000	
ISOPROPYL BENZENE	UG/KG	ND	2000	
P-ISOPROPYLTOLUENE	UG/KG	ND	2000	
METHYLENE CHLORIDE	UG/KG	ND	2000	
NAPHTHALENE	UG/KG	990000	25000	
N-BUTYL BENZENE	UG/KG	ND	2000	
N-PROPYL BENZENE	UG/KG	ND	2000	
SEC-BUTYL BENZENE	UG/KG	ND	2000	
STYRENE	UG/KG	4100	2000	
TERT-BUTYL BENZENE	UG/KG	ND	2000	

"FINAL REPORT FORMAT - SINGLE"

Accession: 603261
Client: CSX TRANSPORTATION
Project Number: 4365B
Project Name: CSX GREENVILLE
Project Location: GREENVILLE, SC
Test: SW 846 8260 TABLE SIX
Analysis Method: 8260 / SW-846, 3rd Edition, September 1986 and Rev. 1, July 1992.
Extraction Method: 8260 / SW-846, 3rd Edition, September 1986 and Rev. 1, July 1992.
Matrix: SOIL
QC Level: II

Lab Id: 005 Sample Date/Time: 14-MAR-96 0900
Client Sample Id: NB8 Received Date: 15-MAR-96

Parameter:	Units:	Results:	Rpt Lmts:	Q:
1,1,1,2-TETRACHLOROETHANE	UG/KG	ND	2000	
1,1,2,2-TETRACHLOROETHANE	UG/KG	ND	2000	
TETRACHLOROETHENE	UG/KG	ND	2000	
TOLUENE	UG/KG	17000	2000	
TRANS 1,2 DICHLOROETHYLENE	UG/KG	ND	2000	
1,1,1-TRICHLOROETHANE	UG/KG	ND	2000	
1,1,2-TRICHLOROETHANE	UG/KG	ND	2000	
1,2,3 TRICHLOROBENZENE	UG/KG	ND	2000	
1,2,4 TRICHLOROBENZENE	UG/KG	ND	2000	
TRICHLOROETHENE	UG/KG	ND	2000	
TRICHLOROFLUOROMETHANE	UG/KG	ND	2000	
1,2,3 TRICHLOROPROPANE	UG/KG	ND	2000	
1,2,4-TRIMETHYLBENZENE	UG/KG	16000	2000	
1,3,5-TRIMETHYLBENZENE	UG/KG	5400	2000	
VINYL CHLORIDE	UG/KG	ND	2000	
M,P-XYLENE	UG/KG	22000	2000	
O-XYLENE	UG/KG	10000	2000	
HEPTANE	UG/KG	ND	2000	
ISOPROPYL ACETATE	UG/KG	ND	8000	
METHYL CYCLOHEXANE	UG/KG	ND	4000	
PROPYL ACETATE	UG/KG	ND	8000	
DIBROMOFLUOROMETHANE	%REC/SURR	102	80-120	
TOLUENE-D8	%REC/SURR	108	81-117	
BROMOFLUOROBENZENE	%REC/SURR	103	74-121	
ANALYST	INITIALS	LL		

Comments:

"FINAL REPORT FORMAT - SINGLE"

Accession: 603261
Client: CSX TRANSPORTATION
Project Number: 4365B
Project Name: CSX GREENVILLE
Project Location: GREENVILLE, SC
Test: SW 846 8260 TABLE SIX
Analysis Method: 8260 / SW-846, 3rd Edition, September 1986 and Rev. 1, July 1992.
Extraction Method: N/A
Matrix: SOIL
QC Level: II

Lab Id: 006 Sample Date/Time: 14-MAR-96 0935
Client Sample Id: DP 16 Received Date: 15-MAR-96

Batch: MAS025 Extraction Date: N/A
Blank: B Dry Weight %: 81 Analysis Date: 23-MAR-96

Parameter:	Units:	Results:	Rpt Lmts:	Q:
BENZENE	UG/KG	ND	6	
BROMOBENZENE	UG/KG	ND	6	
BROMOCHLOROMETHANE	UG/KG	ND	6	
BROMODICHLOROMETHANE	UG/KG	ND	6	
BROMOFORM	UG/KG	ND	6	
BROMOMETHANE	UG/KG	ND	6	
CARBON TETRACHLORIDE	UG/KG	ND	6	
CHLOROBENZENE	UG/KG	ND	6	
CHLOROETHANE	UG/KG	ND	6	
CHLOROFORM	UG/KG	ND	6	
CHLOROMETHANE	UG/KG	ND	6	
2-CHLOROTOLUENE	UG/KG	ND	6	
4-CHLOROTOLUENE	UG/KG	ND	6	
CIS 1,2 DICHLOROETHYLENE	UG/KG	ND	6	
CHLORODIBROMOMETHANE	UG/KG	ND	6	
DIBROMOMETHANE	UG/KG	ND	6	
1,4-DICHLOROBENZENE	UG/KG	ND	6	
1,3-DICHLOROBENZENE	UG/KG	ND	6	
1,2-DICHLOROBENZENE	UG/KG	ND	6	
DICHLORODIFLUOROMETHANE	UG/KG	ND	6	
1,1-DICHLOROETHANE	UG/KG	ND	6	
1,2-DICHLOROETHANE	UG/KG	ND	6	
1,1-DICHLOROETHENE	UG/KG	ND	6	
1,3 DICHLOROPROPANE	UG/KG	ND	6	
2,2-DICHLOROPROPANE	UG/KG	ND	6	
1,2-DICHLOROPROPANE	UG/KG	ND	6	
CIS-1,3-DICHLOROPROPENE	UG/KG	ND	6	
TRANS-1,3-DICHLOROPROPENE	UG/KG	ND	6	
1,1 DICHLOROPROPENE	UG/KG	ND	6	
ETHYL BENZENE	UG/KG	ND	6	
HEXACHLOROBUTADIENE	UG/KG	ND	6	
ISOPROPYL BENZENE	UG/KG	ND	6	
P-ISOPROPYLTOLUENE	UG/KG	ND	6	
METHYLENE CHLORIDE	UG/KG	ND	6	
NAPHTHALENE	UG/KG	ND	6	
N-BUTYL BENZENE	UG/KG	ND	6	
N-PROPYL BENZENE	UG/KG	ND	6	
SEC-BUTYL BENZENE	UG/KG	ND	6	
STYRENE	UG/KG	ND	6	
TERT-BUTYL BENZENE	UG/KG	ND	6	

ANALYTICAL TECHNOLOGIES, INC. 11 East Olive Road Pensacola, Florida 32514 (904) 474-1001

"FINAL REPORT FORMAT - SINGLE"

Accession: 603261
Client: CSX TRANSPORTATION
Project Number: 4365B
Project Name: CSX GREENVILLE
Project Location: GREENVILLE, SC
Test: SW 846 8260 TABLE SIX
Analysis Method: 8260 / SW-846, 3rd Edition, September 1986 and Rev. 1, July 1992.
Extraction Method: N/A
Matrix: SOIL
QC Level: II

Lab Id: 006
Client Sample Id: DP 16
Sample Date/Time: 14-MAR-96 0935
Received Date: 15-MAR-96

Parameter:	Units:	Results:	Rpt Lmts:	Q:
1,1,1,2-TETRACHLOROETHANE	UG/KG	ND	6	
1,1,2,2-TETRACHLOROETHANE	UG/KG	ND	6	
TETRACHLOROETHENE	UG/KG	ND	6	
TOLUENE	UG/KG	ND	6	
TRANS 1,2 DICHLOROETHYLENE	UG/KG	ND	6	
1,1,1-TRICHLOROETHANE	UG/KG	ND	6	
1,1,2-TRICHLOROETHANE	UG/KG	ND	6	
1,2,3 TRICHLOROBENZENE	UG/KG	ND	6	
1,2,4 TRICHLOROBENZENE	UG/KG	ND	6	
TRICHLOROETHENE	UG/KG	ND	6	
TRICHLOROFLUOROMETHANE	UG/KG	ND	6	
1,2,3 TRICHLOROPROPANE	UG/KG	ND	6	
1,2,4-TRIMETHYLBENZENE	UG/KG	ND	6	
1,3,5-TRIMETHYLBENZENE	UG/KG	ND	6	
VINYL CHLORIDE	UG/KG	ND	6	
M,P-XYLENE	UG/KG	ND	6	
O-XYLENE	UG/KG	ND	6	
HEPTANE	UG/KG	ND	6	
ISOPROPYL ACETATE	UG/KG	ND	25	
METHYL CYCLOHEXANE	UG/KG	ND	12	
PROPYL ACETATE	UG/KG	ND	25	
DIBROMOFLUOROMETHANE	%REC/SURR	113	80-120	
TOLUENE-D8	%REC/SURR	99	81-117	
BROMOFLUOROBENZENE	%REC/SURR	110	74-121	
ANALYST	INITIALS	LL		

Comments:

"FINAL REPORT FORMAT - SINGLE"

Accession: 603261
Client: CSX TRANSPORTATION
Project Number: 4365B
Project Name: CSX GREENVILLE
Project Location: GREENVILLE, SC
Test: SW 846 8260 TABLE SIX
Analysis Method: 8260 / SW-846, 3rd Edition, September 1986 and Rev. 1, July 1992.
Extraction Method: N/A
Matrix: SOIL
QC Level: II

Lab Id: 007
Client Sample Id: DP 21
Sample Date/Time: 14-MAR-96 1000
Received Date: 15-MAR-96

Batch: MAS025
Blank: B
Dry Weight %: 72
Extraction Date: N/A
Analysis Date: 23-MAR-96

Parameter:	Units:	Results:	Rpt Lmts:	Q:
BENZENE	UG/KG	ND	7	
BROMOBENZENE	UG/KG	ND	7	
BROMOCHLOROMETHANE	UG/KG	ND	7	
BROMODICHLOROMETHANE	UG/KG	ND	7	
BROMOFORM	UG/KG	ND	7	
BROMOMETHANE	UG/KG	ND	7	
CARBON TETRACHLORIDE	UG/KG	ND	7	
CHLOROBENZENE	UG/KG	ND	7	
CHLOROETHANE	UG/KG	ND	7	
CHLOROFORM	UG/KG	ND	7	
CHLOROMETHANE	UG/KG	ND	7	
2-CHLOROTOLUENE	UG/KG	ND	7	
4-CHLOROTOLUENE	UG/KG	ND	7	
CIS 1,2 DICHLOROETHYLENE	UG/KG	ND	7	
CHLORODIBROMOMETHANE	UG/KG	ND	7	
DIBROMOMETHANE	UG/KG	ND	7	
1,4-DICHLOROBENZENE	UG/KG	ND	7	
1,3-DICHLOROBENZENE	UG/KG	ND	7	
1,2-DICHLOROBENZENE	UG/KG	ND	7	
DICHLORODIFLUOROMETHANE	UG/KG	ND	7	
1,1-DICHLOROETHANE	UG/KG	ND	7	
1,2-DICHLOROETHANE	UG/KG	ND	7	
1,1-DICHLOROETHENE	UG/KG	ND	7	
1,3 DICHLOROPROPANE	UG/KG	ND	7	
2,2-DICHLOROPROPANE	UG/KG	ND	7	
1,2-DICHLOROPROPANE	UG/KG	ND	7	
CIS-1,3-DICHLOROPROPENE	UG/KG	ND	7	
TRANS-1,3-DICHLOROPROPENE	UG/KG	ND	7	
1,1 DICHLOROPROPENE	UG/KG	ND	7	
ETHYL BENZENE	UG/KG	ND	7	
HEXACHLOROBUTADIENE	UG/KG	ND	7	
ISOPROPYL BENZENE	UG/KG	ND	7	
P-ISOPROPYLTOLUENE	UG/KG	ND	7	
METHYLENE CHLORIDE	UG/KG	ND	7	
NAPHTHALENE	UG/KG	ND	7	
N-BUTYL BENZENE	UG/KG	ND	7	
N-PROPYL BENZENE	UG/KG	ND	7	
SEC-BUTYL BENZENE	UG/KG	ND	7	
STYRENE	UG/KG	ND	7	
TERT-BUTYL BENZENE	UG/KG	ND	7	

ANALYTICAL TECHNOLOGIES, INC. 11 East Olive Road Pensacola, Florida 32514 (904) 474-1001

"FINAL REPORT FORMAT - SINGLE"

Accession: 603261
Client: CSX TRANSPORTATION
Project Number: 4365B
Project Name: CSX GREENVILLE
Project Location: GREENVILLE, SC
Test: SW 846 8260 TABLE SIX
Analysis Method: 8260 / SW-846, 3rd Edition, September 1986 and Rev. 1, July 1992.
Extraction Method: N/A
Matrix: SOIL
QC Level: II

Lab Id: 007
Client Sample Id: DP 21

Sample Date/Time: 14-MAR-96 1000
Received Date: 15-MAR-96

Parameter:	Units:	Results:	Rpt Lmts:	Q:
1,1,1,2-TETRACHLOROETHANE	UG/KG	ND	7	
1,1,2,2-TETRACHLOROETHANE	UG/KG	ND	7	
TETRACHLOROETHENE	UG/KG	ND	7	
TOLUENE	UG/KG	ND	7	
TRANS 1,2 DICHLOROETHYLENE	UG/KG	ND	7	
1,1,1-TRICHLOROETHANE	UG/KG	ND	7	
1,1,2-TRICHLOROETHANE	UG/KG	ND	7	
1,2,3 TRICHLOROBENZENE	UG/KG	ND	7	
1,2,4 TRICHLOROBENZENE	UG/KG	ND	7	
TRICHLOROETHENE	UG/KG	ND	7	
TRICHLOROFLUOROMETHANE	UG/KG	ND	7	
1,2,3 TRICHLOROPROPANE	UG/KG	ND	7	
1,2,4-TRIMETHYLBENZENE	UG/KG	ND	7	
1,3,5-TRIMETHYLBENZENE	UG/KG	ND	7	
VINYL CHLORIDE	UG/KG	ND	7	
M,P-XYLENE	UG/KG	ND	7	
O-XYLENE	UG/KG	ND	7	
HEPTANE	UG/KG	ND	7	
ISOPROPYL ACETATE	UG/KG	ND	28	
METHYL CYCLOHEXANE	UG/KG	ND	14	
PROPYL ACETATE	UG/KG	ND	28	
DIBROMOFLUOROMETHANE	%REC/SURR	100	80-120	
TOLUENE-D8	%REC/SURR	98	81-117	
BROMOFLUOROBENZENE	%REC/SURR	113	74-121	
ANALYST	INITIALS	LL		

Comments:

ANALYTICAL TECHNOLOGIES, INC. 11 East Olive Road Pensacola, Florida 32514 (904) 474-1001

Analysis Report

Analysis: BN EXTRACTABLES (8270)

Accession:	603261
Client:	CSX TRANSPORTATION
Project Number:	4365B
Project Name:	CSX GREENVILLE
Project Location:	GREENVILLE, SC
Department:	ORGANIC/MS

ANALYTICAL TECHNOLOGIES, INC. 11 East Olive Road Pensacola, Florida 32514 (904) 474-1001

"FINAL REPORT FORMAT - SINGLE"

Accession: 603261
Client: CSX TRANSPORTATION
Project Number: 4365B
Project Name: CSX GREENVILLE
Project Location: GREENVILLE, SC
Test: BN EXTRACTABLES (8270)
Analysis Method: 8270 / SW-846, 3rd Edition, September 1986 and Rev. 1, July 1992.
Extraction Method: 3520 / SW-846, 3rd Edition, September 1986 and Rev. 1, July, 1992.
Matrix: SURFACE WATER
QC Level: II

Lab Id: 001
Client Sample Id: REEDY 1
Sample Date/Time: 14-MAR-96 1440
Received Date: 15-MAR-96

Batch: ALW024
Blank: A
Dry Weight %: N/A
Extraction Date: 20-MAR-96
Analysis Date: 03-APR-96

Parameter:	Units:	Results:	Rpt Lmts:	Q:
ACENAPHTHENE	UG/L	ND	10	
ACENAPHTHYLENE	UG/L	ND	10	
ACETOPHENONE	UG/L	ND	10	
4-AMINOBIPHENYL	UG/L	ND	10	
ANILINE	UG/L	ND	10	
ANTHRACENE	UG/L	ND	10	
BENZIDINE	UG/L	ND	10	
BENZO(a)ANTHRACENE	UG/L	ND	10	
BENZO(a)PYRENE	UG/L	ND	10	
BENZO(b)FLUORANTHENE	UG/L	ND	10	
BENZO(g,h,i)PERYLENE	UG/L	ND	10	
BENZO(k)FLUORANTHENE	UG/L	ND	10	
BENZYL ALCOHOL	UG/L	ND	10	
BIS(2-CHLOROETHYL)ETHER	UG/L	ND	10	
BIS(2-CHLOROETHOXY)METHANE	UG/L	ND	10	
BIS(2-CHLOROISOPROPYL)ETHER	UG/L	ND	10	
BIS(2-ETHYLHEXYL)PHTHALATE	UG/L	ND	10	
4-BROMOPHENYL-PHENYLETHER	UG/L	ND	10	
BUTYLBENZYLPHTHALATE	UG/L	ND	10	
4-CHLOROANILINE	UG/L	ND	10	
1-CHLORONAPHTHALENE	UG/L	ND	10	
2-CHLORONAPHTHALENE	UG/L	ND	10	
4-CHLOROPHENYL-PHENYLETHER	UG/L	ND	10	
CHRYSENE	UG/L	ND	10	
DIBENZO(A,H)ANTHRACENE	UG/L	ND	10	
DIBENZ(A,J)ACRIDINE	UG/L	ND	10	
DIBENZOFURAN	UG/L	ND	10	
1,2-DICHLOROBENZENE	UG/L	ND	10	
1,3-DICHLOROBENZENE	UG/L	ND	10	
1,4-DICHLOROBENZENE	UG/L	ND	10	
3,3'-DICHLOROBENZIDINE	UG/L	ND	50	
DIETHYLPHTHALATE	UG/L	ND	10	
P-DIMETHYLAMINOAZOBENZENE	UG/L	ND	10	
7,12-DIMETHYLBENZO(a)ANTHRACENE	UG/L	ND	10	
A-,A-DIMETHYLPHENETHYLAMINE	UG/L	ND	10	
DIMETHYLPHTHALATE	UG/L	ND	10	
DI-N-BUTYLPHTHALATE	UG/L	90	10	
2,4-DINITROTOLUENE	UG/L	ND	10	
2,6-DINITROTOLUENE	UG/L	ND	10	
DI-N-OCTYLPHTHALATE	UG/L	ND	10	

"FINAL REPORT FORMAT - SINGLE"

Accession: 603261
Client: CSX TRANSPORTATION
Project Number: 4365B
Project Name: CSX GREENVILLE
Project Location: GREENVILLE, SC
Test: BN EXTRACTABLES (8270)
Analysis Method: 8270 / SW-846, 3rd Edition, September 1986 and Rev. 1, July 1992.
Extraction Method: 3520 / SW-846, 3rd Edition, September 1986 and Rev. 1, July, 1992.
Matrix: SURFACE WATER
QC Level: II

Lab Id: 001
Client Sample Id: REEDY 1
Sample Date/Time: 14-MAR-96 1440
Received Date: 15-MAR-96

Parameter:	Units:	Results:	Rpt Lmts:	Q:
DIPHENYLAMINE	UG/L	ND	10	
1,2-DIPHENYLHYDRAZINE	UG/L	ND	10	
FLUORANTHENE	UG/L	ND	10	
FLUORENE	UG/L	ND	10	
HEXACHLOROBENZENE	UG/L	ND	10	
HEXACHLOROBUTADIENE	UG/L	ND	10	
HEXACHLOROCYCLOPENTADIENE	UG/L	ND	10	
HEXACHLOROETHANE	UG/L	ND	10	
INDENO(1,2,3-cd)PYRENE	UG/L	ND	10	
ISOPHORONE	UG/L	ND	10	
3-METHYLCHOLANTHRENE	UG/L	ND	10	
2-METHYLNAPHTHALENE	UG/L	ND	10	
NAPHTHALENE	UG/L	ND	10	
1-NAPHTHYLAMINE	UG/L	ND	10	
2-NAPHTHYLAMINE	UG/L	ND	10	
2-NITROANILINE	UG/L	ND	10	
3-NITROANILINE	UG/L	ND	10	
4-NITROANILINE	UG/L	ND	10	
NITROBENZENE	UG/L	ND	10	
N-NITROSODIMETHYLAMINE	UG/L	ND	10	
N-NITROSODI-N-BUTYLAMINE	UG/L	ND	10	
N-NITROSODIPHENYLAMINE	UG/L	ND	10	
N-NITROSO-DI-N-PROPYLAMINE	UG/L	ND	10	
N-NITROSOPIPERIDINE	UG/L	ND	10	
PENTACHLOROBENZENE	UG/L	ND	10	
PENTACHLORONITROBENZENE (PCNB)	UG/L	ND	10	
PHENACETIN	UG/L	ND	10	
PHENANTHRENE	UG/L	ND	10	
2-PICOLINE	UG/L	ND	10	
PRONAMIDE	UG/L	ND	10	
PYRENE	UG/L	ND	10	
1,2,4,5-TETRACHLOROBENZENE	UG/L	ND	10	
1,2,4 TRICHLOROBENZENE	UG/L	ND	10	
2-FLUOROBIPHENYL	%REC/SURR	63	43-116	
NITROBENZENE-D5	%REC/SURR	53	35-114	
TERPHENYL-D14	%REC/SURR	74	33-124	
ANALYST	INITIALS	PL		

Comments:

"FINAL REPORT FORMAT - SINGLE"

Accession: 603261
Client: CSX TRANSPORTATION
Project Number: 4365B
Project Name: CSX GREENVILLE
Project Location: GREENVILLE, SC
Test: BN EXTRACTABLES (8270)
Analysis Method: 8270 / SW-846, 3rd Edition, September 1986 and Rev. 1, July 1992.
Extraction Method: 3520 / SW-846, 3rd Edition, September 1986 and Rev. 1, July, 1992.
Matrix: SURFACE WATER
QC Level: II

Lab Id: 002
Client Sample Id: REEDY 2
Sample Date/Time: 14-MAR-96 1500
Received Date: 15-MAR-96

Batch: ALW024
Blank: A
Dry Weight %: N/A
Extraction Date: 20-MAR-96
Analysis Date: 03-APR-96

Parameter:	Units:	Results:	Rpt Lmts:	Q:
ACENAPHTHENE	UG/L	ND	10	
ACENAPHTHYLENE	UG/L	ND	10	
ACETOPHENONE	UG/L	ND	10	
4-AMINOBIPHENYL	UG/L	ND	10	
ANILINE	UG/L	ND	10	
ANTHRACENE	UG/L	ND	10	
BENZIDINE	UG/L	ND	10	
BENZO(a)ANTHRACENE	UG/L	ND	10	
BENZO(a)PYRENE	UG/L	ND	10	
BENZO(b)FLUORANTHENE	UG/L	ND	10	
BENZO(g,h,i)PERYLENE	UG/L	ND	10	
BENZO(k)FLUORANTHENE	UG/L	ND	10	
BENZYL ALCOHOL	UG/L	ND	10	
BIS(2-CHLOROETHYL)ETHER	UG/L	ND	10	
BIS(2-CHLOROETHOXY)METHANE	UG/L	ND	10	
BIS(2-CHLOROISOPROPYL)ETHER	UG/L	ND	10	
BIS(2-ETHYLHEXYL)PHTHALATE	UG/L	ND	10	
4-BROMOPHENYL-PHENYLETHER	UG/L	ND	10	
BUTYLBENZYLPHTHALATE	UG/L	20	10	
4-CHLOROANILINE	UG/L	ND	10	
1-CHLORONAPHTHALENE	UG/L	ND	10	
2-CHLORONAPHTHALENE	UG/L	ND	10	
4-CHLOROPHENYL-PHENYLETHER	UG/L	ND	10	
CHRYSENE	UG/L	ND	10	
DIBENZO(A,H)ANTHRACENE	UG/L	ND	10	
DIBENZ(A,J)ACRIDINE	UG/L	ND	10	
DIBENZOFURAN	UG/L	ND	10	
1,2-DICHLOROBENZENE	UG/L	ND	10	
1,3-DICHLOROBENZENE	UG/L	ND	10	
1,4-DICHLOROBENZENE	UG/L	ND	10	
3,3'-DICHLOROBENZIDINE	UG/L	ND	50	
DIETHYLPHTHALATE	UG/L	ND	10	
P-DIMETHYLAMINOAZOBENZENE	UG/L	ND	10	
7,12-DIMETHYLBENZO(a)ANTHRACENE	UG/L	ND	10	
A-,A-DIMETHYLPHENETHYLAMINE	UG/L	ND	10	
DIMETHYLPHTHALATE	UG/L	ND	10	
DI-N-BUTYLPHTHALATE	UG/L	120	10	
2,4-DINITROTOLUENE	UG/L	ND	10	
2,6-DINITROTOLUENE	UG/L	ND	10	
DI-N-OCTYLPHTHALATE	UG/L	ND	10	

"FINAL REPORT FORMAT - SINGLE"

Accession: 603261
Client: CSX TRANSPORTATION
Project Number: 4365B
Project Name: CSX GREENVILLE
Project Location: GREENVILLE, SC
Test: BN EXTRACTABLES (8270)
Analysis Method: 8270 / SW-846, 3rd Edition, September 1986 and Rev. 1, July 1992.
Extraction Method: 3520 / SW-846, 3rd Edition, September 1986 and Rev. 1, July, 1992.
Matrix: SURFACE WATER
QC Level: II

Lab Id: 002
Client Sample Id: REEDY 2
Sample Date/Time: 14-MAR-96 1500
Received Date: 15-MAR-96

Parameter:	Units:	Results:	Rpt Lmts:	Q:
DIPHENYLAMINE	UG/L	ND	10	
1,2-DIPHENYLHYDRAZINE	UG/L	ND	10	
FLUORANTHENE	UG/L	ND	10	
FLUORENE	UG/L	ND	10	
HEXACHLOROBENZENE	UG/L	ND	10	
HEXACHLOROBUTADIENE	UG/L	ND	10	
HEXACHLOROCYCLOPENTADIENE	UG/L	ND	10	
HEXACHLOROETHANE	UG/L	ND	10	
INDENO(1,2,3-cd)PYRENE	UG/L	ND	10	
ISOPHORONE	UG/L	ND	10	
3-METHYLCHOLANTHRENE	UG/L	ND	10	
2-METHYLNAPHTHALENE	UG/L	ND	10	
NAPHTHALENE	UG/L	ND	10	
1-NAPHTHYLAMINE	UG/L	ND	10	
2-NAPHTHYLAMINE	UG/L	ND	10	
2-NITROANILINE	UG/L	ND	10	
3-NITROANILINE	UG/L	ND	10	
4-NITROANILINE	UG/L	ND	10	
NITROBENZENE	UG/L	ND	10	
N-NITROSODIMETHYLAMINE	UG/L	ND	10	
N-NITROSODI-N-BUTYLAMINE	UG/L	ND	10	
N-NITROSODIPHENYLAMINE	UG/L	ND	10	
N-NITROSO-DI-N-PROPYLAMINE	UG/L	ND	10	
N-NITROSOPIPERIDINE	UG/L	ND	10	
PENTACHLOROBENZENE	UG/L	ND	10	
PENTACHLORONITROBENZENE (PCNB)	UG/L	ND	10	
PHENACETIN	UG/L	ND	10	
PHENANTHRENE	UG/L	ND	10	
2-PICOLINE	UG/L	ND	10	
PRONAMIDE	UG/L	ND	10	
PYRENE	UG/L	ND	10	
1,2,4,5-TETRACHLOROBENZENE	UG/L	ND	10	
1,2,4 TRICHLOROBENZENE	UG/L	ND	10	
2-FLUOROBIPHENYL	%REC/SURR	70	43-116	
NITROBENZENE-D5	%REC/SURR	64	35-114	
TERPHENYL-D14	%REC/SURR	79	33-124	
ANALYST	INITIALS	PL		

Comments:

"FINAL REPORT FORMAT - SINGLE"

Accession: 603261
Client: CSX TRANSPORTATION
Project Number: 4365B
Project Name: CSX GREENVILLE
Project Location: GREENVILLE, SC
Test: BN EXTRACTABLES (8270)
Analysis Method: 8270 / SW-846, 3rd Edition, September 1986 and Rev. 1, July 1992.
Extraction Method: 3520 / SW-846, 3rd Edition, September 1986 and Rev. 1, July, 1992.
Matrix: SURFACE WATER
QC Level: II

Lab Id: 003
Client Sample Id: WD 1
Sample Date/Time: 14-MAR-96 1520
Received Date: 15-MAR-96

Batch: ALW024
Blank: A
Dry Weight %: N/A
Extraction Date: 20-MAR-96
Analysis Date: 03-APR-96

Parameter:	Units:	Results:	Rpt Lmts:	Q:
ACENAPHTHENE	UG/L	ND	10	
ACENAPHTHYLENE	UG/L	ND	10	
ACETOPHENONE	UG/L	ND	10	
4-AMINOBIPHENYL	UG/L	ND	10	
ANILINE	UG/L	ND	10	
ANTHRACENE	UG/L	ND	10	
BENZIDINE	UG/L	ND	10	
BENZO(a)ANTHRACENE	UG/L	ND	10	
BENZO(a)PYRENE	UG/L	ND	10	
BENZO(b)FLUORANTHENE	UG/L	ND	10	
BENZO(g,h,i)PERYLENE	UG/L	ND	10	
BENZO(k)FLUORANTHENE	UG/L	ND	10	
BENZYL ALCOHOL	UG/L	ND	10	
BIS(2-CHLOROETHYL)ETHER	UG/L	ND	10	
BIS(2-CHLOROETHOXY)METHANE	UG/L	ND	10	
BIS(2-CHLOROISOPROPYL)ETHER	UG/L	ND	10	
BIS(2-ETHYLHEXYL)PHTHALATE	UG/L	ND	10	
4-BROMOPHENYL-PHENYLETHER	UG/L	ND	10	
BUTYLBENZYLPHTHALATE	UG/L	29	10	
4-CHLOROANILINE	UG/L	ND	10	
1-CHLORONAPHTHALENE	UG/L	ND	10	
2-CHLORONAPHTHALENE	UG/L	ND	10	
4-CHLOROPHENYL-PHENYLETHER	UG/L	ND	10	
CHRYSENE	UG/L	ND	10	
DIBENZO(A,H)ANTHRACENE	UG/L	ND	10	
DIBENZ(A,J)ACRIDINE	UG/L	ND	10	
DIBENZOFURAN	UG/L	ND	10	
1,2-DICHLOROBENZENE	UG/L	ND	10	
1,3-DICHLOROBENZENE	UG/L	ND	10	
1,4-DICHLOROBENZENE	UG/L	ND	10	
3,3'-DICHLOROBENZIDINE	UG/L	ND	50	
DIETHYLPHTHALATE	UG/L	ND	10	
P-DIMETHYLAMINOAZOBENZENE	UG/L	ND	10	
7,12-DIMETHYLBENZO(a)ANTHRACENE	UG/L	ND	10	
A-,A-DIMETHYLPHENETHYLAMINE	UG/L	ND	10	
DIMETHYLPHTHALATE	UG/L	ND	10	
DI-N-BUTYLPHTHALATE	UG/L	100	10	
2,4-DINITROTOLUENE	UG/L	ND	10	
2,6-DINITROTOLUENE	UG/L	ND	10	
DI-N-OCTYLPHTHALATE	UG/L	ND	10	

"FINAL REPORT FORMAT - SINGLE"

Accession: 603261
Client: CSX TRANSPORTATION
Project Number: 4365B
Project Name: CSX GREENVILLE
Project Location: GREENVILLE, SC
Test: BN EXTRACTABLES (8270)
Analysis Method: 8270 / SW-846, 3rd Edition, September 1986 and Rev. 1, July 1992.
Extraction Method: 3520 / SW-846, 3rd Edition, September 1986 and Rev. 1, July, 1992.
Matrix: SURFACE WATER
QC Level: II

Lab Id: 003
Client Sample Id: WD 1
Sample Date/Time: 14-MAR-96 1520
Received Date: 15-MAR-96

Parameter:	Units:	Results:	Rpt Lmts:	Q:
DIPHENYLAMINE	UG/L	ND	10	
1,2-DIPHENYLHYDRAZINE	UG/L	ND	10	
FLUORANTHENE	UG/L	ND	10	
FLUORENE	UG/L	ND	10	
HEXACHLOROBENZENE	UG/L	ND	10	
HEXACHLOROBUTADIENE	UG/L	ND	10	
HEXACHLOROCYCLOPENTADIENE	UG/L	ND	10	
HEXACHLOROETHANE	UG/L	ND	10	
INDENO(1,2,3-cd)PYRENE	UG/L	ND	10	
ISOPHORONE	UG/L	ND	10	
3-METHYLCHOLANTHRENE	UG/L	ND	10	
2-METHYLNAPHTHALENE	UG/L	ND	10	
NAPHTHALENE	UG/L	ND	10	
1-NAPHTHYLAMINE	UG/L	ND	10	
2-NAPHTHYLAMINE	UG/L	ND	10	
2-NITROANILINE	UG/L	ND	10	
3-NITROANILINE	UG/L	ND	10	
4-NITROANILINE	UG/L	ND	10	
NITROBENZENE	UG/L	ND	10	
N-NITROSODIMETHYLAMINE	UG/L	ND	10	
N-NITROSODI-N-BUTYLAMINE	UG/L	ND	10	
N-NITROSODIPHENYLAMINE	UG/L	ND	10	
N-NITROSO-DI-N-PROPYLAMINE	UG/L	ND	10	
N-NITROSOPIPERIDINE	UG/L	ND	10	
PENTACHLOROBENZENE	UG/L	ND	10	
PENTACHLORONITROBENZENE (PCNB)	UG/L	ND	10	
PHENACETIN	UG/L	ND	10	
PHENANTHRENE	UG/L	ND	10	
2-PICOLINE	UG/L	ND	10	
PRONAMIDE	UG/L	ND	10	
PYRENE	UG/L	ND	10	
1,2,4,5-TETRACHLOROBENZENE	UG/L	ND	10	
1,2,4 TRICHLOROBENZENE	UG/L	ND	10	
2-FLUOROBIPHENYL	%REC/SURR	63	43-116	
NITROBENZENE-D5	%REC/SURR	58	35-114	
TERPHENYL-D14	%REC/SURR	75	33-124	
ANALYST	INITIALS	PL		

Comments:

"FINAL REPORT FORMAT - SINGLE"

Accession: 603261
Client: CSX TRANSPORTATION
Project Number: 4365B
Project Name: CSX GREENVILLE
Project Location: GREENVILLE, SC
Test: BN EXTRACTABLES (8270)
Analysis Method: 8270 / SW-846, 3rd Edition, September 1986 and Rev. 1, July 1992.
Extraction Method: 3520 / SW-846, 3rd Edition, September 1986 and Rev. 1, July, 1992.
Matrix: SURFACE WATER
QC Level: II

Lab Id: 004
Client Sample Id: FD 1
Sample Date/Time: 14-MAR-96 1530
Received Date: 15-MAR-96

Batch: ALW024
Blank: A
Dry Weight %: N/A
Extraction Date: 20-MAR-96
Analysis Date: 03-APR-96

Parameter:	Units:	Results:	Rpt Lmts:	Q:
ACENAPHTHENE	UG/L	ND	10	
ACENAPHTHYLENE	UG/L	ND	10	
ACETOPHENONE	UG/L	ND	10	
4-AMINOBIPHENYL	UG/L	ND	10	
ANILINE	UG/L	ND	10	
ANTHRACENE	UG/L	ND	10	
BENZIDINE	UG/L	ND	10	
BENZO(a)ANTHRACENE	UG/L	ND	10	
BENZO(a)PYRENE	UG/L	ND	10	
BENZO(b)FLUORANTHENE	UG/L	ND	10	
BENZO(g,h,i)PERYLENE	UG/L	ND	10	
BENZO(k)FLUORANTHENE	UG/L	ND	10	
BENZYL ALCOHOL	UG/L	ND	10	
BIS(2-CHLOROETHYL)ETHER	UG/L	ND	10	
BIS(2-CHLOROETHOXY)METHANE	UG/L	ND	10	
BIS(2-CHLOROISOPROPYL)ETHER	UG/L	ND	10	
BIS(2-ETHYLHEXYL)PHTHALATE	UG/L	ND	10	
4-BROMOPHENYL-PHENYLETHER	UG/L	ND	10	
BUTYLBENZYLPHTHALATE	UG/L	38	10	
4-CHLOROANILINE	UG/L	ND	10	
1-CHLORONAPHTHALENE	UG/L	ND	10	
2-CHLORONAPHTHALENE	UG/L	ND	10	
4-CHLOROPHENYL-PHENYLETHER	UG/L	ND	10	
CHRYSENE	UG/L	ND	10	
DIBENZO(A,H)ANTHRACENE	UG/L	ND	10	
DIBENZ(A,J)ACRIDINE	UG/L	ND	10	
DIBENZOFURAN	UG/L	ND	10	
1,2-DICHLOROBENZENE	UG/L	ND	10	
1,3-DICHLOROBENZENE	UG/L	ND	10	
1,4-DICHLOROBENZENE	UG/L	ND	10	
3,3'-DICHLOROBENZIDINE	UG/L	ND	50	
DIETHYLPHTHALATE	UG/L	ND	10	
P-DIMETHYLAMINOAZOBENZENE	UG/L	ND	10	
7,12-DIMETHYLBENZO(a)ANTHRACENE	UG/L	ND	10	
A-,A-DIMETHYLPHENETHYLAMINE	UG/L	ND	10	
DIMETHYLPHTHALATE	UG/L	ND	10	
DI-N-BUTYLPHTHALATE	UG/L	82	10	
2,4-DINITROTOLUENE	UG/L	ND	10	
2,6-DINITROTOLUENE	UG/L	ND	10	
DI-N-OCTYLPHTHALATE	UG/L	ND	10	

"FINAL REPORT FORMAT - SINGLE"

Accession: 603261
Client: CSX TRANSPORTATION
Project Number: 4365B
Project Name: CSX GREENVILLE
Project Location: GREENVILLE, SC
Test: BN EXTRACTABLES (8270)
Analysis Method: 8270 / SW-846, 3rd Edition, September 1986 and Rev. 1, July 1992.
Extraction Method: 3520 / SW-846, 3rd Edition, September 1986 and Rev. 1, July, 1992.
Matrix: SURFACE WATER
QC Level: II

Lab Id: 004
Client Sample Id: FD 1
Sample Date/Time: 14-MAR-96 1530
Received Date: 15-MAR-96

Parameter:	Units:	Results:	Rpt Lmts:	Q:
DIPHENYLAMINE	UG/L	ND	10	
1,2-DIPHENYLHYDRAZINE	UG/L	ND	10	
FLUORANTHENE	UG/L	ND	10	
FLUORENE	UG/L	ND	10	
HEXACHLOROBENZENE	UG/L	ND	10	
HEXACHLOROBUTADIENE	UG/L	ND	10	
HEXACHLOROCYCLOPENTADIENE	UG/L	ND	10	
HEXACHLOROETHANE	UG/L	ND	10	
INDENO(1,2,3-cd)PYRENE	UG/L	ND	10	
ISOPHORONE	UG/L	ND	10	
3-METHYLCHOLANTHRENE	UG/L	ND	10	
2-METHYLNAPHTHALENE	UG/L	ND	10	
NAPHTHALENE	UG/L	ND	10	
1-NAPHTHYLAMINE	UG/L	ND	10	
2-NAPHTHYLAMINE	UG/L	ND	10	
2-NITROANILINE	UG/L	ND	10	
3-NITROANILINE	UG/L	ND	10	
4-NITROANILINE	UG/L	ND	10	
NITROBENZENE	UG/L	ND	10	
N-NITROSODIMETHYLAMINE	UG/L	ND	10	
N-NITROSODI-N-BUTYLAMINE	UG/L	ND	10	
N-NITROSODIPHENYLAMINE	UG/L	ND	10	
N-NITROSO-DI-N-PROPYLAMINE	UG/L	ND	10	
N-NITROSOPIPERIDINE	UG/L	ND	10	
PENTACHLOROBENZENE	UG/L	ND	10	
PENTACHLORONITROBENZENE (PCNB)	UG/L	ND	10	
PHENACETIN	UG/L	ND	10	
PHENANTHRENE	UG/L	ND	10	
2-PICOLINE	UG/L	ND	10	
PRONAMIDE	UG/L	ND	10	
PYRENE	UG/L	ND	10	
1,2,4,5-TETRACHLOROBENZENE	UG/L	ND	10	
1,2,4 TRICHLOROBENZENE	UG/L	ND	10	
2-FLUOROBIPHENYL	%REC/SURR	63	43-116	
NITROBENZENE-D5	%REC/SURR	55	35-114	
TERPHENYL-D14	%REC/SURR	78	33-124	
ANALYST	INITIALS	PL		

Comments:

"FINAL REPORT FORMAT - SINGLE"

Accession: 603261
Client: CSX TRANSPORTATION
Project Number: 4365B
Project Name: CSX GREENVILLE
Project Location: GREENVILLE, SC
Test: BN EXTRACTABLES (8270)
Analysis Method: 8270 / SW-846, 3rd Edition, September 1986 and Rev. 1, July 1992.
Extraction Method: 3520 / SW-846, 3rd Edition, September 1986 and Rev. 1, July, 1992.
Matrix: SOIL
QC Level: II

Lab Id: 005 Sample Date/Time: 14-MAR-96 0900
Client Sample Id: NB8 Received Date: 15-MAR-96

Batch: ALS021 Extraction Date: 19-MAR-96
Blank: A Dry Weight %: 50 Analysis Date: 04-APR-96

Parameter:	Units:	Results:	Rpt Lmts:	Q:
ACENAPHTHENE	UG/KG	600000	660000	J
ACENAPHTHYLENE	UG/KG	ND	660000	
ACETOPHENONE	UG/KG	ND	660000	
4-AMINOBIPHENYL	UG/KG	ND	660000	
ANILINE	UG/KG	ND	660000	
ANTHRACENE	UG/KG	1400000	660000	
BENZIDINE	UG/KG	ND	660000	
BENZO(a)ANTHRACENE	UG/KG	1000000	660000	
BENZO(a)PYRENE	UG/KG	780000	660000	
BENZO(b)FLUORANTHENE	UG/KG	460000	660000	J
BENZO(g,h,i)PERYLENE	UG/KG	380000	660000	J
BENZO(k)FLUORANTHENE	UG/KG	700000	660000	
BENZYL ALCOHOL	UG/KG	ND	660000	
BIS(2-CHLOROETHYL)ETHER	UG/KG	ND	660000	
BIS(2-CHLOROETHOXY)METHANE	UG/KG	ND	660000	
BIS(2-CHLOROISOPROPYL)ETHER	UG/KG	ND	660000	
BIS(2-ETHYLHEXYL)PHTHALATE	UG/KG	ND	660000	
4-BROMOPHENYL-PHENYLETHER	UG/KG	ND	660000	
BUTYLBENZYLPHTHALATE	UG/KG	ND	660000	
4-CHLOROANILINE	UG/KG	ND	660000	
1-CHLORONAPHTHALENE	UG/KG	ND	660000	
2-CHLORONAPHTHALENE	UG/KG	ND	660000	
4-CHLOROPHENYL-PHENYLETHER	UG/KG	ND	660000	
CHRYSENE	UG/KG	980000	660000	
DIBENZO(A,H)ANTHRACENE	UG/KG	ND	660000	
DIBENZ(A,J)ACRIDINE	UG/KG	800000	660000	
DIBENZOFURAN	UG/KG	ND	660000	
1,2-DICHLOROBENZENE	UG/KG	ND	660000	
1,3-DICHLOROBENZENE	UG/KG	ND	660000	
1,4-DICHLOROBENZENE	UG/KG	ND	660000	
3,3'-DICHLOROBENZIDINE	UG/KG	ND	3300000	
DIETHYLPHTHALATE	UG/KG	ND	660000	
P-DIMETHYLAMINOAZOBENZENE	UG/KG	ND	660000	
7,12-DIMETHYLBENZO(a)ANTHRACENE	UG/KG	ND	660000	
A-,A-DIMETHYLPHENETHYLAMINE	UG/KG	ND	660000	
DIMETHYLPHTHALATE	UG/KG	ND	660000	
DI-N-BUTYLPHTHALATE	UG/KG	ND	660000	
2,4-DINITROTOLUENE	UG/KG	ND	660000	
2,6-DINITROTOLUENE	UG/KG	ND	660000	
DI-N-OCTYLPHTHALATE	UG/KG	ND	660000	

"FINAL REPORT FORMAT - SINGLE"

Accession: 603261
Client: CSX TRANSPORTATION
Project Number: 4365B
Project Name: CSX GREENVILLE
Project Location: GREENVILLE, SC
Test: BN EXTRACTABLES (8270)
Analysis Method: 8270 / SW-846, 3rd Edition, September 1986 and Rev. 1, July 1992.
Extraction Method: 3520 / SW-846, 3rd Edition, September 1986 and Rev. 1, July, 1992.
Matrix: SOIL
QC Level: II

Lab Id: 005
Client Sample Id: NB8
Sample Date/Time: 14-MAR-96 0900
Received Date: 15-MAR-96

Parameter:	Units:	Results:	Rpt Lmts:	Q:
DIPHENYLAMINE	UG/KG	ND	660000	
1,2-DIPHENYLHYDRAZINE	UG/KG	ND	660000	
FLUORANTHENE	UG/KG	2000000	660000	
FLUORENE	UG/KG	1700000	660000	
HEXACHLOROBENZENE	UG/KG	ND	660000	
HEXACHLOROBUTADIENE	UG/KG	ND	660000	
HEXACHLOROCYCLOPENTADIENE	UG/KG	ND	660000	
HEXACHLOROETHANE	UG/KG	ND	660000	
INDENO(1,2,3-cd)PYRENE	UG/KG	340000	660000	J
ISOPHORONE	UG/KG	ND	660000	
3-METHYLCHOLANTHRENE	UG/KG	ND	660000	
2-METHYLNAPHTHALENE	UG/KG	3200000	660000	
NAPHTHALENE	UG/KG	5800000	660000	
1-NAPHTHYLAMINE	UG/KG	ND	660000	
2-NAPHTHYLAMINE	UG/KG	ND	660000	
2-NITROANILINE	UG/KG	ND	660000	
3-NITROANILINE	UG/KG	ND	660000	
4-NITROANILINE	UG/KG	ND	660000	
NITROBENZENE	UG/KG	ND	660000	
N-NITROSODIMETHYLAMINE	UG/KG	ND	660000	
N-NITROSODI-N-BUTYLAMINE	UG/KG	ND	660000	
N-NITROSODIPHENYLAMINE	UG/KG	ND	660000	
N-NITROSO-DI-N-PROPYLAMINE	UG/KG	ND	660000	
N-NITROSOPIPERIDINE	UG/KG	ND	660000	
PENTACHLOROBENZENE	UG/KG	ND	660000	
PENTACHLORONITROBENZENE (PCNB)	UG/KG	ND	660000	
PHENACETIN	UG/KG	ND	660000	
PHENANTHRENE	UG/KG	3800000	660000	
2-PICOLINE	UG/KG	ND	660000	
PRONAMIDE	UG/KG	ND	660000	
PYRENE	UG/KG	2600000	660000	
1,2,4,5-TETRACHLOROBENZENE	UG/KG	ND	660000	
1,2,4 TRICHLOROBENZENE	UG/KG	ND	660000	
2-FLUOROBIPHENYL	%REC/SURR	D	30-115	
NITROBENZENE-D5	%REC/SURR	D	23-120	
TERPHENYL-D14	%REC/SURR	D	18-137	
ANALYST	INITIALS	PL		

Comments:
J = THE REPORTED VALUE IS EITHER LESS THAN THE REPORTING LIMIT BUT GREATER THAN ZERO, OR QUANTITATED AS A TIC; THEREFORE, IT IS ESTIMATED.

"FINAL REPORT FORMAT - SINGLE"

Accession: 603261
Client: CSX TRANSPORTATION
Project Number: 4365B
Project Name: CSX GREENVILLE
Project Location: GREENVILLE, SC
Test: BN EXTRACTABLES (8270)
Analysis Method: 8270 / SW-846, 3rd Edition, September 1986 and Rev. 1, July 1992.
Extraction Method: 3520 / SW-846, 3rd Edition, September 1986 and Rev. 1, July, 1992.
Matrix: SOIL
QC Level: II

Lab Id: 006
Client Sample Id: DP 16
Sample Date/Time: 14-MAR-96 0935
Received Date: 15-MAR-96

Batch: ALS021
Blank: A
Dry Weight %: 81
Extraction Date: 19-MAR-96
Analysis Date: 04-APR-96

Parameter:	Units:	Results:	Rpt Lmts:	Q:
ACENAPHTHENE	UG/KG	ND	410	
ACENAPHTHYLENE	UG/KG	ND	410	
ACETOPHENONE	UG/KG	ND	410	
4-AMINOBIPHENYL	UG/KG	ND	410	
ANILINE	UG/KG	ND	410	
ANTHRACENE	UG/KG	ND	410	
BENZIDINE	UG/KG	ND	410	
BENZO(a)ANTHRACENE	UG/KG	ND	410	
BENZO(a)PYRENE	UG/KG	ND	410	
BENZO(b)FLUORANTHENE	UG/KG	ND	410	
BENZO(g,h,i)PERYLENE	UG/KG	ND	410	
BENZO(k)FLUORANTHENE	UG/KG	ND	410	
BENZYL ALCOHOL	UG/KG	ND	410	
BIS(2-CHLOROETHYL)ETHER	UG/KG	ND	410	
BIS(2-CHLOROETHOXY)METHANE	UG/KG	ND	410	
BIS(2-CHLOROISOPROPYL)ETHER	UG/KG	ND	410	
BIS(2-ETHYLHEXYL)PHTHALATE	UG/KG	ND	410	
4-BROMOPHENYL-PHENYLETHER	UG/KG	ND	410	
BUTYLBENZYLPHTHALATE	UG/KG	ND	410	
4-CHLOROANILINE	UG/KG	ND	410	
1-CHLORONAPHTHALENE	UG/KG	ND	410	
2-CHLORONAPHTHALENE	UG/KG	ND	410	
4-CHLOROPHENYL-PHENYLETHER	UG/KG	ND	410	
CHRYSENE	UG/KG	ND	410	
DIBENZO(A,H)ANTHRACENE	UG/KG	ND	410	
DIBENZ(A,J)ACRIDINE	UG/KG	ND	410	
DIBENZOFURAN	UG/KG	ND	410	
1,2-DICHLOROBENZENE	UG/KG	ND	410	
1,3-DICHLOROBENZENE	UG/KG	ND	410	
1,4-DICHLOROBENZENE	UG/KG	ND	410	
3,3'-DICHLOROBENZIDINE	UG/KG	ND	2000	
DIETHYLPHTHALATE	UG/KG	ND	410	
P-DIMETHYLAMINOAZOBENZENE	UG/KG	ND	410	
7,12-DIMETHYLBENZO(a)ANTHRACENE	UG/KG	ND	410	
A-,A-DIMETHYLPHENETHYLAMINE	UG/KG	ND	410	
DIMETHYLPHTHALATE	UG/KG	ND	410	
DI-N-BUTYLPHTHALATE	UG/KG	ND	410	
2,4-DINITROTOLUENE	UG/KG	ND	410	
2,6-DINITROTOLUENE	UG/KG	ND	410	
DI-N-OCTYLPHTHALATE	UG/KG	ND	410	

"FINAL REPORT FORMAT - SINGLE"

Accession: 603261
Client: CSX TRANSPORTATION
Project Number: 4365B
Project Name: CSX GREENVILLE
Project Location: GREENVILLE, SC
Test: BN EXTRACTABLES (8270)
Analysis Method: 8270 / SW-846, 3rd Edition, September 1986 and Rev. 1, July 1992.
Extraction Method: 3520 / SW-846, 3rd Edition, September 1986 and Rev. 1, July, 1992.
Matrix: SOIL
QC Level: II

Lab Id: 006
Client Sample Id: DP 16
Sample Date/Time: 14-MAR-96 0935
Received Date: 15-MAR-96

Parameter:	Units:	Results:	Rpt Lmts:	Q:
DIPHENYLAMINE	UG/KG	ND	410	
1,2-DIPHENYLHYDRAZINE	UG/KG	ND	410	
FLUORANTHENE	UG/KG	ND	410	
FLUORENE	UG/KG	ND	410	
HEXACHLOROBENZENE	UG/KG	ND	410	
HEXACHLOROBUTADIENE	UG/KG	ND	410	
HEXACHLOROCYCLOPENTADIENE	UG/KG	ND	410	
HEXACHLOROETHANE	UG/KG	ND	410	
INDENO(1,2,3-cd)PYRENE	UG/KG	ND	410	
ISOPHORONE	UG/KG	ND	410	
3-METHYLCHOLANTHRENE	UG/KG	ND	410	
2-METHYLNAPHTHALENE	UG/KG	ND	410	
NAPHTHALENE	UG/KG	ND	410	
1-NAPHTHYLAMINE	UG/KG	ND	410	
2-NAPHTHYLAMINE	UG/KG	ND	410	
2-NITROANILINE	UG/KG	ND	410	
3-NITROANILINE	UG/KG	ND	410	
4-NITROANILINE	UG/KG	ND	410	
NITROBENZENE	UG/KG	ND	410	
N-NITROSODIMETHYLAMINE	UG/KG	ND	410	
N-NITROSODI-N-BUTYLAMINE	UG/KG	ND	410	
N-NITROSODIPHENYLAMINE	UG/KG	ND	410	
N-NITROSO-DI-N-PROPYLAMINE	UG/KG	ND	410	
N-NITROSOPIPERIDINE	UG/KG	ND	410	
PENTACHLOROBENZENE	UG/KG	ND	410	
PENTACHLORONITROBENZENE (PCNB)	UG/KG	ND	410	
PHENACETIN	UG/KG	ND	410	
PHENANTHRENE	UG/KG	ND	410	
2-PICOLINE	UG/KG	ND	410	
PRONAMIDE	UG/KG	ND	410	
PYRENE	UG/KG	ND	410	
1,2,4,5-TETRACHLOROBENZENE	UG/KG	ND	410	
1,2,4 TRICHLOROBENZENE	UG/KG	ND	410	
2-FLUOROBIPHENYL	%REC/SURR	67	30-115	
NITROBENZENE-D5	%REC/SURR	58	23-120	
TERPHENYL-D14	%REC/SURR	82	18-137	
ANALYST	INITIALS	PL		

Comments:

"FINAL REPORT FORMAT - SINGLE"

Accession: 603261
Client: CSX TRANSPORTATION
Project Number: 4365B
Project Name: CSX GREENVILLE
Project Location: GREENVILLE, SC
Test: BN EXTRACTABLES (8270)
Analysis Method: 8270 / SW-846, 3rd Edition, September 1986 and Rev. 1, July 1992.
Extraction Method: 3520 / SW-846, 3rd Edition, September 1986 and Rev. 1, July, 1992.
Matrix: SOIL
QC Level: II

Lab Id: 007
Client Sample Id: DP 21
Sample Date/Time: 14-MAR-96 1000
Received Date: 15-MAR-96

Batch: ALS021
Blank: A
Dry Weight %: 73
Extraction Date: 19-MAR-96
Analysis Date: 04-APR-96

Parameter:	Units:	Results:	Rpt Lmts:	Q:
ACENAPHTHENE	UG/KG	ND	450	
ACENAPHTHYLENE	UG/KG	ND	450	
ACETOPHENONE	UG/KG	ND	450	
4-AMINOBIPHENYL	UG/KG	ND	450	
ANILINE	UG/KG	ND	450	
ANTHRACENE	UG/KG	ND	450	
BENZIDINE	UG/KG	ND	450	
BENZO(a)ANTHRACENE	UG/KG	ND	450	
BENZO(a)PYRENE	UG/KG	ND	450	
BENZO(b)FLUORANTHENE	UG/KG	ND	450	
BENZO(g,h,i)PERYLENE	UG/KG	ND	450	
BENZO(k)FLUORANTHENE	UG/KG	ND	450	
BENZYL ALCOHOL	UG/KG	ND	450	
BIS(2-CHLOROETHYL)ETHER	UG/KG	ND	450	
BIS(2-CHLOROETHOXY)METHANE	UG/KG	ND	450	
BIS(2-CHLOROISOPROPYL)ETHER	UG/KG	ND	450	
BIS(2-ETHYLHEXYL)PHTHALATE	UG/KG	ND	450	
4-BROMOPHENYL-PHENYLETHER	UG/KG	ND	450	
BUTYLBENZYLPHTHALATE	UG/KG	ND	450	
4-CHLOROANILINE	UG/KG	ND	450	
1-CHLORONAPHTHALENE	UG/KG	ND	450	
2-CHLORONAPHTHALENE	UG/KG	ND	450	
4-CHLOROPHENYL-PHENYLETHER	UG/KG	ND	450	
CHRYSENE	UG/KG	ND	450	
DIBENZO(A,H)ANTHRACENE	UG/KG	ND	450	
DIBENZ(A,J)ACRIDINE	UG/KG	ND	450	
DIBENZOFURAN	UG/KG	ND	450	
1,2-DICHLOROBENZENE	UG/KG	ND	450	
1,3-DICHLOROBENZENE	UG/KG	ND	450	
1,4-DICHLOROBENZENE	UG/KG	ND	450	
3,3'-DICHLOROBENZIDINE	UG/KG	ND	2300	
DIETHYLPHTHALATE	UG/KG	ND	450	
P-DIMETHYLAMINOAZOBENZENE	UG/KG	ND	450	
7,12-DIMETHYLBENZO(a)ANTHRACENE	UG/KG	ND	450	
A-,A-DIMETHYLPHENETHYLAMINE	UG/KG	ND	450	
DIMETHYLPHTHALATE	UG/KG	ND	450	
DI-N-BUTYLPHTHALATE	UG/KG	ND	450	
2,4-DINITROTOLUENE	UG/KG	ND	450	
2,6-DINITROTOLUENE	UG/KG	ND	450	
DI-N-OCTYLPHTHALATE	UG/KG	ND	450	

"FINAL REPORT FORMAT - SINGLE"

Accession: 603261
Client: CSX TRANSPORTATION
Project Number: 4365B
Project Name: CSX GREENVILLE
Project Location: GREENVILLE, SC
Test: BN EXTRACTABLES (8270)
Analysis Method: 8270 / SW-846, 3rd Edition, September 1986 and Rev. 1, July 1992.
Extraction Method: 3520 / SW-846, 3rd Edition, September 1986 and Rev. 1, July, 1992.
Matrix: SOIL
QC Level: II

Lab Id: 007
Client Sample Id: DP 21
Sample Date/Time: 14-MAR-96 1000
Received Date: 15-MAR-96

Parameter:	Units:	Results:	Rpt Lmts:	Q:
DIPHENYLAMINE	UG/KG	ND	450	
1,2-DIPHENYLHYDRAZINE	UG/KG	ND	450	
FLUORANTHENE	UG/KG	ND	450	
FLUORENE	UG/KG	ND	450	
HEXACHLOROBENZENE	UG/KG	ND	450	
HEXACHLOROBUTADIENE	UG/KG	ND	450	
HEXACHLOROCYCLOPENTADIENE	UG/KG	ND	450	
HEXACHLOROETHANE	UG/KG	ND	450	
INDENO(1,2,3-cd)PYRENE	UG/KG	ND	450	
ISOPHORONE	UG/KG	ND	450	
3-METHYLCHOLANTHRENE	UG/KG	ND	450	
2-METHYLNAPHTHALENE	UG/KG	ND	450	
NAPHTHALENE	UG/KG	ND	450	
1-NAPHTHYLAMINE	UG/KG	ND	450	
2-NAPHTHYLAMINE	UG/KG	ND	450	
2-NITROANILINE	UG/KG	ND	450	
3-NITROANILINE	UG/KG	ND	450	
4-NITROANILINE	UG/KG	ND	450	
NITROBENZENE	UG/KG	ND	450	
N-NITROSODIMETHYLAMINE	UG/KG	ND	450	
N-NITROSODI-N-BUTYLAMINE	UG/KG	ND	450	
N-NITROSODIPHENYLAMINE	UG/KG	ND	450	
N-NITROSO-DI-N-PROPYLAMINE	UG/KG	ND	450	
N-NITROSOPIPERIDINE	UG/KG	ND	450	
PENTACHLOROBENZENE	UG/KG	ND	450	
PENTACHLORONITROBENZENE (PCNB)	UG/KG	ND	450	
PHENACETIN	UG/KG	ND	450	
PHENANTHRENE	UG/KG	ND	450	
2-PICOLINE	UG/KG	ND	450	
PRONAMIDE	UG/KG	ND	450	
PYRENE	UG/KG	ND	450	
1,2,4,5-TETRACHLOROBENZENE	UG/KG	ND	450	
1,2,4 TRICHLOROBENZENE	UG/KG	ND	450	
2-FLUOROBIPHENYL	%REC/SURR	68	30-115	
NITROBENZENE-D5	%REC/SURR	64	23-120	
TERPHENYL-D14	%REC/SURR	69	18-137	
ANALYST	INITIALS	PL		

Comments:

ANALYTICAL TECHNOLOGIES, INC. 11 East Olive Road Pensacola, Florida 32514 (904) 474-1001

Analysis Report

Analysis: SW 846 8260 TABLE SIX

Accession:	603602
Client:	CSX TRANSPORTATION
Project Number:	4365B
Project Name:	CSXT-GREENVILLE
Project Location:	GREENVILLE, SC
Department:	ORGANIC/MS

ANALYTICAL TECHNOLOGIES, INC. 11 East Olive Road Pensacola, Florida 32514 (904) 474-1001

"FINAL REPORT FORMAT - SINGLE"

Accession: 603602
Client: CSX TRANSPORTATION
Project Number: 4365B
Project Name: CSXT-GREENVILLE
Project Location: GREENVILLE, SC
Test: SW 846 8260 TABLE SIX
Analysis Method: 8260 / SW-846, 3rd Edition, September 1986 and Rev. 1, July 1992.
Extraction Method: N/A
Matrix: SOIL
QC Level: II

Lab Id: 001
Client Sample Id: DP 23
Sample Date/Time: 27-MAR-96 1210
Received Date: 29-MAR-96

Batch: MAS038
Blank: A
Dry Weight %: 71
Extraction Date: N/A
Analysis Date: 08-APR-96

Parameter:	Units:	Results:	Rpt Lmts:	Q:
BENZENE	UG/KG	ND	7	
BROMOBENZENE	UG/KG	ND	7	
BROMOCHLOROMETHANE	UG/KG	ND	7	
BROMODICHLOROMETHANE	UG/KG	ND	7	
BROMOFORM	UG/KG	ND	7	
BROMOMETHANE	UG/KG	ND	7	
CARBON TETRACHLORIDE	UG/KG	ND	7	
CHLOROBENZENE	UG/KG	ND	7	
CHLOROETHANE	UG/KG	ND	7	
CHLOROFORM	UG/KG	ND	7	
CHLOROMETHANE	UG/KG	ND	7	
2-CHLOROTOLUENE	UG/KG	ND	7	
4-CHLOROTOLUENE	UG/KG	ND	7	
CIS 1,2 DICHLOROETHYLENE	UG/KG	ND	7	
CHLORODIBROMOMETHANE	UG/KG	ND	7	
DIBROMOMETHANE	UG/KG	ND	7	
1,4-DICHLOROBENZENE	UG/KG	ND	7	
1,3-DICHLOROBENZENE	UG/KG	ND	7	
1,2-DICHLOROBENZENE	UG/KG	ND	7	
DICHLORODIFLUOROMETHANE	UG/KG	ND	7	
1,1-DICHLOROETHANE	UG/KG	ND	7	
1,2-DICHLOROETHANE	UG/KG	ND	7	
1,1-DICHLOROETHENE	UG/KG	ND	7	
1,3 DICHLOROPROPANE	UG/KG	ND	7	
2,2-DICHLOROPROPANE	UG/KG	ND	7	
1,2-DICHLOROPROPANE	UG/KG	ND	7	
CIS-1,3-DICHLOROPROPENE	UG/KG	ND	7	
TRANS-1,3-DICHLOROPROPENE	UG/KG	ND	7	
1,1 DICHLOROPROPENE	UG/KG	ND	7	
ETHYL BENZENE	UG/KG	ND	7	
HEXACHLOROBUTADIENE	UG/KG	ND	7	
ISOPROPYL BENZENE	UG/KG	ND	7	
P-ISOPROPYLTOLUENE	UG/KG	ND	7	
METHYLENE CHLORIDE	UG/KG	ND	7	
NAPHTHALENE	UG/KG	ND	7	
N-BUTYL BENZENE	UG/KG	ND	7	
N-PROPYL BENZENE	UG/KG	ND	7	
SEC-BUTYL BENZENE	UG/KG	ND	7	
STYRENE	UG/KG	ND	7	
TERT-BUTYL BENZENE	UG/KG	ND	7	

"FINAL REPORT FORMAT - SINGLE"

Accession: 603602
Client: CSX TRANSPORTATION
Project Number: 4365B
Project Name: CSXT-GREENVILLE
Project Location: GREENVILLE, SC
Test: SW 846 8260 TABLE SIX
Analysis Method: 8260 / SW-846, 3rd Edition, September 1986 and Rev. 1, July 1992.
Extraction Method: N/A
Matrix: SOIL
QC Level: II

Lab Id: 001
Client Sample Id: DP 23
Sample Date/Time: 27-MAR-96 1210
Received Date: 29-MAR-96

Parameter:	Units:	Results:	Rpt Lmts:	Q:
1,1,1,2-TETRACHLOROETHANE	UG/KG	ND	7	
1,1,2,2-TETRACHLOROETHANE	UG/KG	ND	7	
TETRACHLOROETHENE	UG/KG	ND	7	
TOLUENE	UG/KG	ND	7	
TRANS 1,2 DICHLOROETHYLENE	UG/KG	ND	7	
1,1,1-TRICHLOROETHANE	UG/KG	ND	7	
1,1,2-TRICHLOROETHANE	UG/KG	ND	7	
1,2,3 TRICHLOROBENZENE	UG/KG	ND	7	
1,2,4 TRICHLOROBENZENE	UG/KG	ND	7	
TRICHLOROETHENE	UG/KG	ND	7	
TRICHLOROFLUOROMETHANE	UG/KG	ND	7	
1,2,3 TRICHLOROPROPANE	UG/KG	ND	7	
1,2,4-TRIMETHYLBENZENE	UG/KG	ND	7	
1,3,5-TRIMETHYLBENZENE	UG/KG	ND	7	
VINYL CHLORIDE	UG/KG	ND	7	
M,P-XYLENE	UG/KG	ND	7	
O-XYLENE	UG/KG	ND	7	
HEPTANE	UG/KG	ND	7	
ISOPROPYL ACETATE	UG/KG	ND	28	
METHYL CYCLOHEXANE	UG/KG	ND	14	
PROPYL ACETATE	UG/KG	ND	28	
DIBROMOFLUOROMETHANE	%REC/SURR	92	80-120	
TOLUENE-D8	%REC/SURR	98	81-117	
BROMOFLUOROBENZENE	%REC/SURR	100	74-121	
ANALYST	INITIALS	LL		

Comments:

"FINAL REPORT FORMAT - SINGLE"

Accession: 603602
Client: CSX TRANSPORTATION
Project Number: 4365B
Project Name: CSXT-GREENVILLE
Project Location: GREENVILLE, SC
Test: SW 846 8260 TABLE SIX
Analysis Method: 8260 / SW-846, 3rd Edition, September 1986 and Rev. 1, July 1992.
Extraction Method: N/A
Matrix: SOIL
QC Level: II

Lab Id: 002
Client Sample Id: DP 26
Sample Date/Time: 27-MAR-96 0945
Received Date: 29-MAR-96

Batch: MAS038
Blank: A
Dry Weight %: 67
Extraction Date: N/A
Analysis Date: 08-APR-96

Parameter:	Units:	Results:	Rpt Lmts:	Q:
BENZENE	UG/KG	ND	7	
BROMOBENZENE	UG/KG	ND	7	
BROMOCHLOROMETHANE	UG/KG	ND	7	
BROMODICHLOROMETHANE	UG/KG	ND	7	
BROMOFORM	UG/KG	ND	7	
BROMOMETHANE	UG/KG	ND	7	
CARBON TETRACHLORIDE	UG/KG	ND	7	
CHLOROBENZENE	UG/KG	ND	7	
CHLOROETHANE	UG/KG	ND	7	
CHLOROFORM	UG/KG	ND	7	
CHLOROMETHANE	UG/KG	ND	7	
2-CHLOROTOLUENE	UG/KG	ND	7	
4-CHLOROTOLUENE	UG/KG	ND	7	
CIS 1,2 DICHLOROETHYLENE	UG/KG	ND	7	
CHLORODIBROMOMETHANE	UG/KG	ND	7	
DIBROMOMETHANE	UG/KG	ND	7	
1,4-DICHLOROBENZENE	UG/KG	ND	7	
1,3-DICHLOROBENZENE	UG/KG	ND	7	
1,2-DICHLOROBENZENE	UG/KG	ND	7	
DICHLORODIFLUOROMETHANE	UG/KG	ND	7	
1,1-DICHLOROETHANE	UG/KG	ND	7	
1,2-DICHLOROETHANE	UG/KG	ND	7	
1,1-DICHLOROETHENE	UG/KG	ND	7	
1,3 DICHLOROPROPANE	UG/KG	ND	7	
2,2-DICHLOROPROPANE	UG/KG	ND	7	
1,2-DICHLOROPROPANE	UG/KG	ND	7	
CIS-1,3-DICHLOROPROPENE	UG/KG	ND	7	
TRANS-1,3-DICHLOROPROPENE	UG/KG	ND	7	
1,1 DICHLOROPROPENE	UG/KG	ND	7	
ETHYL BENZENE	UG/KG	ND	7	
HEXACHLOROBUTADIENE	UG/KG	ND	7	
ISOPROPYL BENZENE	UG/KG	ND	7	
P-ISOPROPYLTOLUENE	UG/KG	ND	7	
METHYLENE CHLORIDE	UG/KG	ND	7	
NAPHTHALENE	UG/KG	ND	7	
N-BUTYL BENZENE	UG/KG	ND	7	
N-PROPYL BENZENE	UG/KG	ND	7	
SEC-BUTYL BENZENE	UG/KG	ND	7	
STYRENE	UG/KG	ND	7	
TERT-BUTYL BENZENE	UG/KG	ND	7	

"FINAL REPORT FORMAT - SINGLE"

Accession: 603602
Client: CSX TRANSPORTATION
Project Number: 4365B
Project Name: CSXT-GREENVILLE
Project Location: GREENVILLE, SC
Test: SW 846 8260 TABLE SIX
Analysis Method: 8260 / SW-846, 3rd Edition, September 1986 and Rev. 1, July 1992.
Extraction Method: N/A
Matrix: SOIL
QC Level: II

Lab Id: 002
Client Sample Id: DP 26
Sample Date/Time: 27-MAR-96 0945
Received Date: 29-MAR-96

Parameter:	Units:	Results:	Rpt Lmts:	Q:
1,1,1,2-TETRACHLOROETHANE	UG/KG	ND	7	
1,1,2,2-TETRACHLOROETHANE	UG/KG	ND	7	
TETRACHLOROETHENE	UG/KG	ND	7	
TOLUENE	UG/KG	ND	7	
TRANS 1,2 DICHLOROETHYLENE	UG/KG	ND	7	
1,1,1-TRICHLOROETHANE	UG/KG	ND	7	
1,1,2-TRICHLOROETHANE	UG/KG	ND	7	
1,2,3 TRICHLOROBENZENE	UG/KG	ND	7	
1,2,4 TRICHLOROBENZENE	UG/KG	ND	7	
TRICHLOROETHENE	UG/KG	94	7	
TRICHLOROFLUOROMETHANE	UG/KG	ND	7	
1,2,3 TRICHLOROPROPANE	UG/KG	ND	7	
1,2,4-TRIMETHYLBENZENE	UG/KG	ND	7	
1,3,5-TRIMETHYLBENZENE	UG/KG	ND	7	
VINYL CHLORIDE	UG/KG	ND	7	
M,P-XYLENE	UG/KG	ND	7	
O-XYLENE	UG/KG	ND	7	
HEPTANE	UG/KG	ND	7	
ISOPROPYL ACETATE	UG/KG	ND	30	
METHYL CYCLOHEXANE	UG/KG	ND	15	
PROPYL ACETATE	UG/KG	ND	30	
DIBROMOFLUOROMETHANE	%REC/SURR	96	80-120	
TOLUENE-D8	%REC/SURR	95	81-117	
BROMOFLUOROBENZENE	%REC/SURR	117	74-121	
ANALYST	INITIALS	LL		

Comments:

"FINAL REPORT FORMAT - SINGLE"

Accession: 603602
Client: CSX TRANSPORTATION
Project Number: 4365B
Project Name: CSXT-GREENVILLE
Project Location: GREENVILLE, SC
Test: SW 846 8260 TABLE SIX
Analysis Method: 8260 / SW-846, 3rd Edition, September 1986 and Rev. 1, July 1992.
Extraction Method: N/A
Matrix: SOIL
QC Level: II

Lab Id: 003
Client Sample Id: DP 28
Sample Date/Time: 27-MAR-96 1015
Received Date: 29-MAR-96

Batch: MAS038
Blank: A
Dry Weight %: 70
Extraction Date: N/A
Analysis Date: 08-APR-96

Parameter:	Units:	Results:	Rpt Lmts:	Q:
BENZENE	UG/KG	7	7	
BROMOBENZENE	UG/KG	ND	7	
BROMOCHLOROMETHANE	UG/KG	ND	7	
BROMODICHLOROMETHANE	UG/KG	ND	7	
BROMOFORM	UG/KG	ND	7	
BROMOMETHANE	UG/KG	ND	7	
CARBON TETRACHLORIDE	UG/KG	ND	7	
CHLOROBENZENE	UG/KG	ND	7	
CHLOROETHANE	UG/KG	ND	7	
CHLOROFORM	UG/KG	ND	7	
CHLOROMETHANE	UG/KG	ND	7	
2-CHLOROTOLUENE	UG/KG	ND	7	
4-CHLOROTOLUENE	UG/KG	ND	7	
CIS 1,2 DICHLOROETHYLENE	UG/KG	ND	7	
CHLORODIBROMOMETHANE	UG/KG	ND	7	
DIBROMOMETHANE	UG/KG	ND	7	
1,4-DICHLOROBENZENE	UG/KG	ND	7	
1,3-DICHLOROBENZENE	UG/KG	ND	7	
1,2-DICHLOROBENZENE	UG/KG	ND	7	
DICHLORODIFLUOROMETHANE	UG/KG	ND	7	
1,1-DICHLOROETHANE	UG/KG	ND	7	
1,2-DICHLOROETHANE	UG/KG	ND	7	
1,1-DICHLOROETHENE	UG/KG	ND	7	
1,3 DICHLOROPROPANE	UG/KG	ND	7	
2,2-DICHLOROPROPANE	UG/KG	ND	7	
1,2-DICHLOROPROPANE	UG/KG	ND	7	
CIS-1,3-DICHLOROPROPENE	UG/KG	ND	7	
TRANS-1,3-DICHLOROPROPENE	UG/KG	ND	7	
1,1 DICHLOROPROPENE	UG/KG	ND	7	
ETHYL BENZENE	UG/KG	ND	7	
HEXACHLOROBUTADIENE	UG/KG	ND	7	
ISOPROPYL BENZENE	UG/KG	ND	7	
P-ISOPROPYLTOLUENE	UG/KG	ND	7	
METHYLENE CHLORIDE	UG/KG	ND	7	
NAPHTHALENE	UG/KG	20	7	
N-BUTYL BENZENE	UG/KG	ND	7	
N-PROPYL BENZENE	UG/KG	ND	7	
SEC-BUTYL BENZENE	UG/KG	ND	7	
STYRENE	UG/KG	34	7	
TERT-BUTYL BENZENE	UG/KG	ND	7	

"FINAL REPORT FORMAT - SINGLE"

Accession: 603602
Client: CSX TRANSPORTATION
Project Number: 4365B
Project Name: CSXT-GREENVILLE
Project Location: GREENVILLE, SC
Test: SW 846 8260 TABLE SIX
Analysis Method: 8260 / SW-846, 3rd Edition, September 1986 and Rev. 1, July 1992.
Extraction Method: N/A
Matrix: SOIL
QC Level: II

Lab Id: 003
Client Sample Id: DP 28
Sample Date/Time: 27-MAR-96 1015
Received Date: 29-MAR-96

Parameter:	Units:	Results:	Rpt Lmts:	Q:
1,1,1,2-TETRACHLOROETHANE	UG/KG	ND	7	
1,1,2,2-TETRACHLOROETHANE	UG/KG	ND	7	
TETRACHLOROETHENE	UG/KG	ND	7	
TOLUENE	UG/KG	ND	7	
TRANS 1,2 DICHLOROETHYLENE	UG/KG	ND	7	
1,1,1-TRICHLOROETHANE	UG/KG	ND	7	
1,1,2-TRICHLOROETHANE	UG/KG	ND	7	
1,2,3 TRICHLOROBENZENE	UG/KG	ND	7	
1,2,4 TRICHLOROBENZENE	UG/KG	ND	7	
TRICHLOROETHENE	UG/KG	ND	7	
TRICHLOROFLUOROMETHANE	UG/KG	ND	7	
1,2,3 TRICHLOROPROPANE	UG/KG	ND	7	
1,2,4-TRIMETHYLBENZENE	UG/KG	ND	7	
1,3,5-TRIMETHYLBENZENE	UG/KG	ND	7	
VINYL CHLORIDE	UG/KG	ND	7	
M,P-XYLENE	UG/KG	ND	7	
O-XYLENE	UG/KG	ND	7	
HEPTANE	UG/KG	ND	7	
ISOPROPYL ACETATE	UG/KG	ND	29	
METHYL CYCLOHEXANE	UG/KG	ND	14	
PROPYL ACETATE	UG/KG	ND	29	
DIBROMOFLUOROMETHANE	%REC/SURR	99	80-120	
TOLUENE-D8	%REC/SURR	93	81-117	
BROMOFLUOROBENZENE	%REC/SURR	128*	74-121	
ANALYST	INITIALS	LL		

Comments:

"FINAL REPORT FORMAT - SINGLE"

Accession: 603602
Client: CSX TRANSPORTATION
Project Number: 4365B
Project Name: CSXT-GREENVILLE
Project Location: GREENVILLE, SC
Test: SW 846 8260 TABLE SIX
Analysis Method: 8260 / SW-846, 3rd Edition, September 1986 and Rev. 1, July 1992.
Extraction Method: N/A
Matrix: SOIL
QC Level: II

Lab Id: 004
Client Sample Id: DP 29
Sample Date/Time: 27-MAR-96 1045
Received Date: 29-MAR-96

Batch: MAS038
Blank: A
Dry Weight %: 64
Extraction Date: N/A
Analysis Date: 08-APR-96

Parameter:	Units:	Results:	Rpt Lmts:	Q:
BENZENE	UG/KG	ND	8	
BROMOBENZENE	UG/KG	ND	8	
BROMOCHLOROMETHANE	UG/KG	ND	8	
BROMODICHLOROMETHANE	UG/KG	ND	8	
BROMOFORM	UG/KG	ND	8	
BROMOMETHANE	UG/KG	ND	8	
CARBON TETRACHLORIDE	UG/KG	ND	8	
CHLOROBENZENE	UG/KG	ND	8	
CHLOROETHANE	UG/KG	ND	8	
CHLOROFORM	UG/KG	ND	8	
CHLOROMETHANE	UG/KG	ND	8	
2-CHLOROTOLUENE	UG/KG	ND	8	
4-CHLOROTOLUENE	UG/KG	ND	8	
CIS 1,2 DICHLOROETHYLENE	UG/KG	ND	8	
CHLORODIBROMOMETHANE	UG/KG	ND	8	
DIBROMOMETHANE	UG/KG	ND	8	
1,4-DICHLOROBENZENE	UG/KG	ND	8	
1,3-DICHLOROBENZENE	UG/KG	ND	8	
1,2-DICHLOROBENZENE	UG/KG	ND	8	
DICHLORODIFLUOROMETHANE	UG/KG	ND	8	
1,1-DICHLOROETHANE	UG/KG	ND	8	
1,2-DICHLOROETHANE	UG/KG	ND	8	
1,1-DICHLOROETHENE	UG/KG	ND	8	
1,3 DICHLOROPROPANE	UG/KG	ND	8	
2,2-DICHLOROPROPANE	UG/KG	ND	8	
1,2-DICHLOROPROPANE	UG/KG	ND	8	
CIS-1,3-DICHLOROPROPENE	UG/KG	ND	8	
TRANS-1,3-DICHLOROPROPENE	UG/KG	ND	8	
1,1 DICHLOROPROPENE	UG/KG	ND	8	
ETHYL BENZENE	UG/KG	ND	8	
HEXACHLOROBUTADIENE	UG/KG	ND	8	
ISOPROPYL BENZENE	UG/KG	ND	8	
P-ISOPROPYLTOLUENE	UG/KG	ND	8	
METHYLENE CHLORIDE	UG/KG	ND	8	
NAPHTHALENE	UG/KG	210	8	
N-BUTYL BENZENE	UG/KG	ND	8	
N-PROPYL BENZENE	UG/KG	ND	8	
SEC-BUTYL BENZENE	UG/KG	ND	8	
STYRENE	UG/KG	ND	8	
TERT-BUTYL BENZENE	UG/KG	ND	8	

ANALYTICAL TECHNOLOGIES, INC. 11 East Olive Road Pensacola, Florida 32514 (904) 474-1001

"FINAL REPORT FORMAT - SINGLE"

Accession: 603602
Client: CSX TRANSPORTATION
Project Number: 4365B
Project Name: CSXT-GREENVILLE
Project Location: GREENVILLE, SC
Test: SW 846 8260 TABLE SIX
Analysis Method: 8260 / SW-846, 3rd Edition, September 1986 and Rev. 1, July 1992.
Extraction Method: N/A
Matrix: SOIL
QC Level: II

Lab Id: 004
Client Sample Id: DP 29
Sample Date/Time: 27-MAR-96 1045
Received Date: 29-MAR-96

Parameter:	Units:	Results:	Rpt Lmts:	Q:
1,1,1,2-TETRACHLOROETHANE	UG/KG	ND	8	
1,1,2,2-TETRACHLOROETHANE	UG/KG	ND	8	
TETRACHLOROETHENE	UG/KG	ND	8	
TOLUENE	UG/KG	ND	8	
TRANS 1,2 DICHLOROETHYLENE	UG/KG	ND	8	
1,1,1-TRICHLOROETHANE	UG/KG	ND	8	
1,1,2-TRICHLOROETHANE	UG/KG	ND	8	
1,2,3 TRICHLOROBENZENE	UG/KG	ND	8	
1,2,4 TRICHLOROBENZENE	UG/KG	ND	8	
TRICHLOROETHENE	UG/KG	ND	8	
TRICHLOROFLUOROMETHANE	UG/KG	ND	8	
1,2,3 TRICHLOROPROPANE	UG/KG	ND	8	
1,2,4-TRIMETHYLBENZENE	UG/KG	ND	8	
1,3,5-TRIMETHYLBENZENE	UG/KG	ND	8	
VINYL CHLORIDE	UG/KG	ND	8	
M,P-XYLENE	UG/KG	ND	8	
O-XYLENE	UG/KG	ND	8	
HEPTANE	UG/KG	ND	8	
ISOPROPYL ACETATE	UG/KG	ND	31	
METHYL CYCLOHEXANE	UG/KG	ND	16	
PROPYL ACETATE	UG/KG	ND	31	
DIBROMOFLUOROMETHANE	%REC/SURR	94	80-120	
TOLUENE-D8	%REC/SURR	77*	81-117	
BROMOFLUOROBENZENE	%REC/SURR	160*	74-121	
ANALYST	INITIALS	LL		

Comments:
* SURROGATE RECOVERY OUTSIDE ACCEPTANCE LIMITS DUE TO MATRIX INTERFERENCE.

"FINAL REPORT FORMAT - SINGLE"

Accession: 603602
Client: CSX TRANSPORTATION
Project Number: 4365B
Project Name: CSXT-GREENVILLE
Project Location: GREENVILLE, SC
Test: SW 846 8260 TABLE SIX
Analysis Method: 8260 / SW-846, 3rd Edition, September 1986 and Rev. 1, July 1992.
Extraction Method: N/A
Matrix: SOIL
QC Level: II

Lab Id: 005 Sample Date/Time: 27-MAR-96 1105
Client Sample Id: DP 9 Received Date: 29-MAR-96

Batch: MAS038 Extraction Date: N/A
Blank: A Dry Weight %: 85 Analysis Date: 08-APR-96

Parameter:	Units:	Results:	Rpt Lmts:	Q:
BENZENE	UG/KG	ND	6	
BROMOBENZENE	UG/KG	ND	6	
BROMOCHLOROMETHANE	UG/KG	ND	6	
BROMODICHLOROMETHANE	UG/KG	ND	6	
BROMOFORM	UG/KG	ND	6	
BROMOMETHANE	UG/KG	ND	6	
CARBON TETRACHLORIDE	UG/KG	ND	6	
CHLOROBENZENE	UG/KG	ND	6	
CHLOROETHANE	UG/KG	ND	6	
CHLOROFORM	UG/KG	ND	6	
CHLOROMETHANE	UG/KG	ND	6	
2-CHLOROTOLUENE	UG/KG	ND	6	
4-CHLOROTOLUENE	UG/KG	ND	6	
CIS 1,2 DICHLOROETHYLENE	UG/KG	ND	6	
CHLORODIBROMOMETHANE	UG/KG	ND	6	
DIBROMOMETHANE	UG/KG	ND	6	
1,4-DICHLOROBENZENE	UG/KG	ND	6	
1,3-DICHLOROBENZENE	UG/KG	ND	6	
1,2-DICHLOROBENZENE	UG/KG	ND	6	
DICHLORODIFLUOROMETHANE	UG/KG	ND	6	
1,1-DICHLOROETHANE	UG/KG	ND	6	
1,2-DICHLOROETHANE	UG/KG	ND	6	
1,1-DICHLOROETHENE	UG/KG	ND	6	
1,3 DICHLOROPROPANE	UG/KG	ND	6	
2,2-DICHLOROPROPANE	UG/KG	ND	6	
1,2-DICHLOROPROPANE	UG/KG	ND	6	
CIS-1,3-DICHLOROPROPENE	UG/KG	ND	6	
TRANS-1,3-DICHLOROPROPENE	UG/KG	ND	6	
1,1 DICHLOROPROPENE	UG/KG	ND	6	
ETHYL BENZENE	UG/KG	ND	6	
HEXACHLOROBUTADIENE	UG/KG	ND	6	
ISOPROPYL BENZENE	UG/KG	ND	6	
P-ISOPROPYLTOLUENE	UG/KG	ND	6	
METHYLENE CHLORIDE	UG/KG	ND	6	
NAPHTHALENE *	UG/KG	69*	6	
N-BUTYL BENZENE	UG/KG	ND	6	
N-PROPYL BENZENE	UG/KG	ND	6	
SEC-BUTYL BENZENE	UG/KG	ND	6	
STYRENE	UG/KG	ND	6	
TERT-BUTYL BENZENE	UG/KG	ND	6	

ANALYTICAL TECHNOLOGIES, INC. 11 East Olive Road Pensacola, Florida 32514 (904) 474-1001

"FINAL REPORT FORMAT - SINGLE"

Accession: 603602
Client: CSX TRANSPORTATION
Project Number: 4365B
Project Name: CSXT-GREENVILLE
Project Location: GREENVILLE, SC
Test: SW 846 8260 TABLE SIX
Analysis Method: 8260 / SW-846, 3rd Edition, September 1986 and Rev. 1, July 1992.
Extraction Method: N/A
Matrix: SOIL
QC Level: II

Lab Id: 005
Client Sample Id: DP 9
Sample Date/Time: 27-MAR-96 1105
Received Date: 29-MAR-96

Parameter:	Units:	Results:	Rpt Lmts:	Q:
1,1,1,2-TETRACHLOROETHANE	UG/KG	ND	6	
1,1,2,2-TETRACHLOROETHANE	UG/KG	ND	6	
TETRACHLOROETHENE	UG/KG	ND	6	
TOLUENE	UG/KG	ND	6	
TRANS 1,2 DICHLOROETHYLENE	UG/KG	ND	6	
1,1,1-TRICHLOROETHANE	UG/KG	ND	6	
1,1,2-TRICHLOROETHANE	UG/KG	ND	6	
1,2,3 TRICHLOROBENZENE	UG/KG	ND	6	
1,2,4 TRICHLOROBENZENE	UG/KG	ND	6	
TRICHLOROETHENE	UG/KG	ND	6	
TRICHLOROFLUOROMETHANE	UG/KG	ND	6	
1,2,3 TRICHLOROPROPANE	UG/KG	ND	6	
1,2,4-TRIMETHYLBENZENE	UG/KG	ND	6	
1,3,5-TRIMETHYLBENZENE	UG/KG	ND	6	
VINYL CHLORIDE	UG/KG	ND	6	
M,P-XYLENE	UG/KG	ND	6	
O-XYLENE	UG/KG	ND	6	
HEPTANE	UG/KG	ND	6	
ISOPROPYL ACETATE	UG/KG	ND	24	
METHYL CYCLOHEXANE	UG/KG	ND	12	
PROPYL ACETATE	UG/KG	ND	24	
DIBROMOFLUOROMETHANE	%REC/SURR	96	80-120	
TOLUENE-D8	%REC/SURR	92	81-117	
BROMOFLUOROBENZENE	%REC/SURR	109	74-121	
ANALYST	INITIALS	LL		

Comments:

AMERICAN ENVIRONMENTAL NETWORK 11 East Olive Road Pensacola, Florida 32514 (904) 474-1001

Analysis Report

Analysis: BN EXTRACTABLES (8270)

Accession:	603602
Client:	CSX TRANSPORTATION
Project Number:	4365B
Project Name:	CSXT-GREENVILLE
Project Location:	GREENVILLE, SC
Department:	ORGANIC/MS

"FINAL REPORT FORMAT - SINGLE"

Accession: 603602
Client: CSX TRANSPORTATION
Project Number: 4365B
Project Name: CSXT-GREENVILLE
Project Location: GREENVILLE, SC
Test: BN EXTRACTABLES (8270)
Analysis Method: 8270 / SW-846, 3rd Edition, September 1986 and Rev. 1, July 1992.
Extraction Method: 3550 / SW-846, 3rd Edition, September 1986 and Rev. 1, July 1992.
Matrix: SOIL
QC Level: II

Lab Id: 001 Sample Date/Time: 27-MAR-96 1210
Client Sample Id: DP 23 Received Date: 29-MAR-96

Batch: ALS023 Extraction Date: 01-APR-96
Blank: A Dry Weight %: 71 Analysis Date: 04-APR-96

Parameter:	Units:	Results:	Rpt Lmts:	Q:
ACENAPHTHENE	UG/KG	ND	330	
ACENAPHTHYLENE	UG/KG	ND	330	
ACETOPHENONE	UG/KG	ND	330	
4-AMINOBIPHENYL	UG/KG	ND	330	
ANILINE	UG/KG	ND	330	
ANTHRACENE	UG/KG	ND	330	
BENZIDINE	UG/KG	ND	330	
BENZO(a)ANTHRACENE	UG/KG	ND	330	
BENZO(a)PYRENE	UG/KG	ND	330	
BENZO(b)FLUORANTHENE	UG/KG	ND	330	
BENZO(g,h,i)PERYLENE	UG/KG	ND	330	
BENZO(k)FLUORANTHENE	UG/KG	ND	330	
BENZYL ALCOHOL	UG/KG	ND	330	
BIS(2-CHLOROETHYL)ETHER	UG/KG	ND	330	
BIS(2-CHLOROETHOXY)METHANE	UG/KG	ND	330	
BIS(2-CHLOROISOPROPYL)ETHER	UG/KG	ND	330	
BIS(2-ETHYLHEXYL)PHTHALATE	UG/KG	ND	330	
4-BROMOPHENYL-PHENYLETHER	UG/KG	ND	330	
BUTYLBENZYLPHTHALATE	UG/KG	ND	330	
4-CHLOROANILINE	UG/KG	ND	330	
1-CHLORONAPHTHALENE	UG/KG	ND	330	
2-CHLORONAPHTHALENE	UG/KG	ND	330	
4-CHLOROPHENYL-PHENYLETHER	UG/KG	ND	330	
CHRYSENE	UG/KG	ND	330	
DIBENZO(A,H)ANTHRACENE	UG/KG	ND	330	
DIBENZ(A,J)ACRIDINE	UG/KG	ND	330	
DIBENZOFURAN	UG/KG	ND	330	
1,2-DICHLOROBENZENE	UG/KG	ND	330	
1,3-DICHLOROBENZENE	UG/KG	ND	330	
1,4-DICHLOROBENZENE	UG/KG	ND	330	
3,3'-DICHLOROBENZIDINE	UG/KG	ND	1700	
DIETHYLPHTHALATE	UG/KG	ND	330	
P-DIMETHYLAMINOAZOBENZENE	UG/KG	ND	330	
7,12-DIMETHYLBENZO(a)ANTHRACENE	UG/KG	ND	330	
A-,A-DIMETHYLPHENETHYLAMINE	UG/KG	ND	330	
DIMETHYLPHTHALATE	UG/KG	ND	330	
DI-N-BUTYLPHTHALATE	UG/KG	ND	330	
2,4-DINITROTOLUENE	UG/KG	ND	330	
2,6-DINITROTOLUENE	UG/KG	ND	330	
DI-N-OCTYLPHTHALATE	UG/KG	ND	330	

"FINAL REPORT FORMAT - SINGLE"

Accession: 603602
Client: CSX TRANSPORTATION
Project Number: 4365B
Project Name: CSXT-GREENVILLE
Project Location: GREENVILLE, SC
Test: BN EXTRACTABLES (8270)
Analysis Method: 8270 / SW-846, 3rd Edition, September 1986 and Rev. 1, July 1992.
Extraction Method: 3550 / SW-846, 3rd Edition, September 1986 and Rev. 1, July 1992.
Matrix: SOIL
QC Level: II

Lab Id: 001
Client Sample Id: DP 23
Sample Date/Time: 27-MAR-96 1210
Received Date: 29-MAR-96

Parameter:	Units:	Results:	Rpt Lmts:	Q:
DIPHENYLAMINE	UG/KG	ND	330	
1,2-DIPHENYLHYDRAZINE	UG/KG	ND	330	
FLUORANTHENE	UG/KG	ND	330	
FLUORENE	UG/KG	ND	330	
HEXACHLOROBENZENE	UG/KG	ND	330	
HEXACHLOROBUTADIENE	UG/KG	ND	330	
HEXACHLOROCYCLOPENTADIENE	UG/KG	ND	330	
HEXACHLOROETHANE	UG/KG	ND	330	
INDENO(1,2,3-cd)PYRENE	UG/KG	ND	330	
ISOPHORONE	UG/KG	ND	330	
3-METHYLCHOLANTHRENE	UG/KG	ND	330	
2-METHYLNAPHTHALENE	UG/KG	ND	330	
NAPHTHALENE	UG/KG	ND	330	
1-NAPHTHYLAMINE	UG/KG	ND	330	
2-NAPHTHYLAMINE	UG/KG	ND	330	
2-NITROANILINE	UG/KG	ND	330	
3-NITROANILINE	UG/KG	ND	330	
4-NITROANILINE	UG/KG	ND	330	
NITROBENZENE	UG/KG	ND	330	
N-NITROSODIMETHYLAMINE	UG/KG	ND	330	
N-NITROSODI-N-BUTYLAMINE	UG/KG	ND	330	
N-NITROSODIPHENYLAMINE	UG/KG	ND	330	
N-NITROSO-DI-N-PROPYLAMINE	UG/KG	ND	330	
N-NITROSOPIPERIDINE	UG/KG	ND	330	
PENTACHLOROBENZENE	UG/KG	ND	330	
PENTACHLORONITROBENZENE (PCNB)	UG/KG	ND	330	
PHENACETIN	UG/KG	ND	330	
PHENANTHRENE	UG/KG	ND	330	
2-PICOLINE	UG/KG	ND	330	
PRONAMIDE	UG/KG	ND	330	
PYRENE	UG/KG	ND	330	
1,2,4,5-TETRACHLOROBENZENE	UG/KG	ND	330	
1,2,4 TRICHLOROBENZENE	UG/KG	ND	330	
2-FLUOROBIPHENYL	%REC/SURR	69	30-115	
NITROBENZENE-D5	%REC/SURR	62	23-120	
TERPHENYL-D14	%REC/SURR	73	18-137	
ANALYST	INITIALS	PL		

Comments:

"FINAL REPORT FORMAT - SINGLE"

Accession: 603602
Client: CSX TRANSPORTATION
Project Number: 4365B
Project Name: CSXT-GREENVILLE
Project Location: GREENVILLE, SC
Test: BN EXTRACTABLES (8270)
Analysis Method: 8270 / SW-846, 3rd Edition, September 1986 and Rev. 1, July 1992.
Extraction Method: 3550 / SW-846, 3rd Edition, September 1986 and Rev. 1, July 1992.
Matrix: SOIL
QC Level: II

Lab Id: 002
Client Sample Id: DP 26
Sample Date/Time: 27-MAR-96 0945
Received Date: 29-MAR-96

Batch: ALS023
Blank: A
Dry Weight %: 67
Extraction Date: 01-APR-96
Analysis Date: 08-APR-96

Parameter:	Units:	Results:	Rpt Lmts:	Q:
ACENAPHTHENE	UG/KG	ND	330	
ACENAPHTHYLENE	UG/KG	ND	330	
ACETOPHENONE	UG/KG	ND	330	
4-AMINOBIPHENYL	UG/KG	ND	330	
ANILINE	UG/KG	ND	330	
ANTHRACENE	UG/KG	ND	330	
BENZIDINE	UG/KG	ND	330	
BENZO(a)ANTHRACENE	UG/KG	ND	330	
BENZO(a)PYRENE	UG/KG	ND	330	
BENZO(b)FLUORANTHENE	UG/KG	ND	330	
BENZO(g,h,i)PERYLENE	UG/KG	ND	330	
BENZO(k)FLUORANTHENE	UG/KG	ND	330	
BENZYL ALCOHOL	UG/KG	ND	330	
BIS(2-CHLOROETHYL)ETHER	UG/KG	ND	330	
BIS(2-CHLOROETHOXY)METHANE	UG/KG	ND	330	
BIS(2-CHLOROISOPROPYL)ETHER	UG/KG	ND	330	
BIS(2-ETHYLHEXYL)PHTHALATE	UG/KG	ND	330	
4-BROMOPHENYL-PHENYLETHER	UG/KG	ND	330	
BUTYLBENZYLPHTHALATE	UG/KG	ND	330	
4-CHLOROANILINE	UG/KG	ND	330	
1-CHLORONAPHTHALENE	UG/KG	ND	330	
2-CHLORONAPHTHALENE	UG/KG	ND	330	
4-CHLOROPHENYL-PHENYLETHER	UG/KG	ND	330	
CHRYSENE	UG/KG	ND	330	
DIBENZO(A,H)ANTHRACENE	UG/KG	ND	330	
DIBENZ(A,J)ACRIDINE	UG/KG	ND	330	
DIBENZOFURAN	UG/KG	ND	330	
1,2-DICHLOROBENZENE	UG/KG	ND	330	
1,3-DICHLOROBENZENE	UG/KG	ND	330	
1,4-DICHLOROBENZENE	UG/KG	ND	330	
3,3'-DICHLOROBENZIDINE	UG/KG	ND	1700	
DIETHYLPHTHALATE	UG/KG	ND	330	
P-DIMETHYLAMINOAZOBENZENE	UG/KG	ND	330	
7,12-DIMETHYLBENZO(a)ANTHRACENE	UG/KG	ND	330	
A-,A-DIMETHYLPHENETHYLAMINE	UG/KG	ND	330	
DIMETHYLPHTHALATE	UG/KG	ND	330	
DI-N-BUTYLPHTHALATE	UG/KG	ND	330	
2,4-DINITROTOLUENE	UG/KG	ND	330	
2,6-DINITROTOLUENE	UG/KG	ND	330	
DI-N-OCTYLPHTHALATE	UG/KG	ND	330	

"FINAL REPORT FORMAT - SINGLE"

Accession: 603602
Client: CSX TRANSPORTATION
Project Number: 4365B
Project Name: CSXT-GREENVILLE
Project Location: GREENVILLE, SC
Test: BN EXTRACTABLES (8270)
Analysis Method: 8270 / SW-846, 3rd Edition, September 1986 and Rev. 1, July 1992.
Extraction Method: 3550 / SW-846, 3rd Edition, September 1986 and Rev. 1, July 1992.
Matrix: SOIL
QC Level: II

Lab Id: 002
Client Sample Id: DP 26
Sample Date/Time: 27-MAR-96 0945
Received Date: 29-MAR-96

Parameter:	Units:	Results:	Rpt Lmts:	Q:
DIPHENYLAMINE	UG/KG	ND	330	
1,2-DIPHENYLHYDRAZINE	UG/KG	ND	330	
FLUORANTHENE	UG/KG	ND	330	
FLUORENE	UG/KG	ND	330	
HEXACHLOROBENZENE	UG/KG	ND	330	
HEXACHLOROBUTADIENE	UG/KG	ND	330	
HEXACHLOROCYCLOPENTADIENE	UG/KG	ND	330	
HEXACHLOROETHANE	UG/KG	ND	330	
INDENO(1,2,3-cd)PYRENE	UG/KG	ND	330	
ISOPHORONE	UG/KG	ND	330	
3-METHYLCHOLANTHRENE	UG/KG	ND	330	
2-METHYLNAPHTHALENE	UG/KG	ND	330	
NAPHTHALENE	UG/KG	ND	330	
1-NAPHTHYLAMINE	UG/KG	ND	330	
2-NAPHTHYLAMINE	UG/KG	ND	330	
2-NITROANILINE	UG/KG	ND	330	
3-NITROANILINE	UG/KG	ND	330	
4-NITROANILINE	UG/KG	ND	330	
NITROBENZENE	UG/KG	ND	330	
N-NITROSODIMETHYLAMINE	UG/KG	ND	330	
N-NITROSODI-N-BUTYLAMINE	UG/KG	ND	330	
N-NITROSODIPHENYLAMINE	UG/KG	ND	330	
N-NITROSO-DI-N-PROPYLAMINE	UG/KG	ND	330	
N-NITROSOPIPERIDINE	UG/KG	ND	330	
PENTACHLOROBENZENE	UG/KG	ND	330	
PENTACHLORONITROBENZENE (PCNB)	UG/KG	ND	330	
PHENACETIN	UG/KG	ND	330	
PHENANTHRENE	UG/KG	ND	330	
2-PICOLINE	UG/KG	ND	330	
PRONAMIDE	UG/KG	ND	330	
PYRENE	UG/KG	ND	330	
1,2,4,5-TETRACHLOROBENZENE	UG/KG	ND	330	
1,2,4 TRICHLOROBENZENE	UG/KG	ND	330	
2-FLUOROBIPHENYL	%REC/SURR	55	30-115	
NITROBENZENE-D5	%REC/SURR	45	23-120	
TERPHENYL-D14	%REC/SURR	57	18-137	
ANALYST	INITIALS	PL		

Comments:

"FINAL REPORT FORMAT - SINGLE"

Accession: 603602
Client: CSX TRANSPORTATION
Project Number: 4365B
Project Name: CSXT-GREENVILLE
Project Location: GREENVILLE, SC
Test: BN EXTRACTABLES (8270)
Analysis Method: 8270 / SW-846, 3rd Edition, September 1986 and Rev. 1, July 1992.
Extraction Method: 3550 / SW-846, 3rd Edition, September 1986 and Rev. 1, July 1992.
Matrix: SOIL
QC Level: II

Lab Id: 003 Sample Date/Time: 27-MAR-96 1015
Client Sample Id: DP 28 Received Date: 29-MAR-96

Batch: ALS023 Extraction Date: 01-APR-96
Blank: A Dry Weight %: 70 Analysis Date: 08-APR-96

Parameter:	Units:	Results:	Rpt Lmts:	Q:
ACENAPHTHENE	UG/KG	ND	330	
ACENAPHTHYLENE	UG/KG	ND	330	
ACETOPHENONE	UG/KG	ND	330	
4-AMINOBIPHENYL	UG/KG	ND	330	
ANILINE	UG/KG	ND	330	
ANTHRACENE	UG/KG	ND	330	
BENZIDINE	UG/KG	ND	330	
BENZO(a)ANTHRACENE	UG/KG	ND	330	
BENZO(a)PYRENE	UG/KG	ND	330	
BENZO(b)FLUORANTHENE	UG/KG	ND	330	
BENZO(g,h,i)PERYLENE	UG/KG	ND	330	
BENZO(k)FLUORANTHENE	UG/KG	ND	330	
BENZYL ALCOHOL	UG/KG	ND	330	
BIS(2-CHLOROETHYL)ETHER	UG/KG	ND	330	
BIS(2-CHLOROETHOXY)METHANE	UG/KG	ND	330	
BIS(2-CHLOROISOPROPYL)ETHER	UG/KG	ND	330	
BIS(2-ETHYLHEXYL)PHTHALATE	UG/KG	ND	330	
4-BROMOPHENYL-PHENYLETHER	UG/KG	ND	330	
BUTYLBENZYLPHTHALATE	UG/KG	ND	330	
4-CHLOROANILINE	UG/KG	ND	330	
1-CHLORONAPHTHALENE	UG/KG	ND	330	
2-CHLORONAPHTHALENE	UG/KG	ND	330	
4-CHLOROPHENYL-PHENYLETHER	UG/KG	ND	330	
CHRYSENE	UG/KG	ND	330	
DIBENZO(A,H)ANTHRACENE	UG/KG	ND	330	
DIBENZ(A,J)ACRIDINE	UG/KG	ND	330	
DIBENZOFURAN	UG/KG	ND	330	
1,2-DICHLOROBENZENE	UG/KG	ND	330	
1,3-DICHLOROBENZENE	UG/KG	ND	330	
1,4-DICHLOROBENZENE	UG/KG	ND	330	
3,3'-DICHLOROBENZIDINE	UG/KG	ND	1700	
DIETHYLPHTHALATE	UG/KG	ND	330	
P-DIMETHYLAMINOAZOBENZENE	UG/KG	ND	330	
7,12-DIMETHYLBENZO(a)ANTHRACENE	UG/KG	ND	330	
A-,A-DIMETHYLPHENETHYLAMINE	UG/KG	ND	330	
DIMETHYLPHTHALATE	UG/KG	ND	330	
DI-N-BUTYLPHTHALATE	UG/KG	ND	330	
2,4-DINITROTOLUENE	UG/KG	ND	330	
2,6-DINITROTOLUENE	UG/KG	ND	330	
DI-N-OCTYLPHTHALATE	UG/KG	ND	330	

"FINAL REPORT FORMAT - SINGLE"

Accession: 603602
Client: CSX TRANSPORTATION
Project Number: 4365B
Project Name: CSXT-GREENVILLE
Project Location: GREENVILLE, SC
Test: BN EXTRACTABLES (8270)
Analysis Method: 8270 / SW-846, 3rd Edition, September 1986 and Rev. 1, July 1992.
Extraction Method: 3550 / SW-846, 3rd Edition, September 1986 and Rev. 1, July 1992.
Matrix: SOIL
QC Level: II

Lab Id: 003
Client Sample Id: DP 28
Sample Date/Time: 27-MAR-96 1015
Received Date: 29-MAR-96

Parameter:	Units:	Results:	Rpt Lmts:	Q:
DIPHENYLAMINE	UG/KG	ND	330	
1,2-DIPHENYLHYDRAZINE	UG/KG	ND	330	
FLUORANTHENE	UG/KG	ND	330	
FLUORENE	UG/KG	ND	330	
HEXACHLOROBENZENE	UG/KG	ND	330	
HEXACHLOROBUTADIENE	UG/KG	ND	330	
HEXACHLOROCYCLOPENTADIENE	UG/KG	ND	330	
HEXACHLOROETHANE	UG/KG	ND	330	
INDENO(1,2,3-cd)PYRENE	UG/KG	ND	330	
ISOPHORONE	UG/KG	ND	330	
3-METHYLCHOLANTHRENE	UG/KG	ND	330	
2-METHYLNAPHTHALENE	UG/KG	ND	330	
NAPHTHALENE	UG/KG	ND	330	
1-NAPHTHYLAMINE	UG/KG	ND	330	
2-NAPHTHYLAMINE	UG/KG	ND	330	
2-NITROANILINE	UG/KG	ND	330	
3-NITROANILINE	UG/KG	ND	330	
4-NITROANILINE	UG/KG	ND	330	
NITROBENZENE	UG/KG	ND	330	
N-NITROSODIMETHYLAMINE	UG/KG	ND	330	
N-NITROSODI-N-BUTYLAMINE	UG/KG	ND	330	
N-NITROSODIPHENYLAMINE	UG/KG	ND	330	
N-NITROSO-DI-N-PROPYLAMINE	UG/KG	ND	330	
N-NITROSOPIPERIDINE	UG/KG	ND	330	
PENTACHLOROBENZENE	UG/KG	ND	330	
PENTACHLORONITROBENZENE (PCNB)	UG/KG	ND	330	
PHENACETIN	UG/KG	ND	330	
PHENANTHRENE	UG/KG	ND	330	
2-PICOLINE	UG/KG	ND	330	
PRONAMIDE	UG/KG	ND	330	
PYRENE	UG/KG	ND	330	
1,2,4,5-TETRACHLOROBENZENE	UG/KG	ND	330	
1,2,4 TRICHLOROBENZENE	UG/KG	ND	330	
2-FLUOROBIPHENYL	%REC/SURR	61	30-115	
NITROBENZENE-D5	%REC/SURR	50	23-120	
TERPHENYL-D14	%REC/SURR	68	18-137	
ANALYST	INITIALS	PL		

Comments:

"FINAL REPORT FORMAT - SINGLE"

Accession: 603602
Client: CSX TRANSPORTATION
Project Number: 4365B
Project Name: CSXT-GREENVILLE
Project Location: GREENVILLE, SC
Test: BN EXTRACTABLES (8270)
Analysis Method: 8270 / SW-846, 3rd Edition, September 1986 and Rev. 1, July 1992.
Extraction Method: 3550 / SW-846, 3rd Edition, September 1986 and Rev. 1, July 1992.
Matrix: SOIL
QC Level: II

Lab Id: 004
Client Sample Id: DP 29
Sample Date/Time: 27-MAR-96 1045
Received Date: 29-MAR-96

Batch: ALS023
Blank: A
Dry Weight %: 64
Extraction Date: 01-APR-96
Analysis Date: 04-APR-96

Parameter:	Units:	Results:	Rpt Lmts:	Q:
ACENAPHTHENE	UG/KG	ND	33000	
ACENAPHTHYLENE	UG/KG	ND	33000	
ACETOPHENONE	UG/KG	ND	33000	
4-AMINOBIPHENYL	UG/KG	ND	33000	
ANILINE	UG/KG	ND	33000	
ANTHRACENE	UG/KG	ND	33000	
BENZIDINE	UG/KG	ND	33000	
BENZO(a)ANTHRACENE	UG/KG	ND	33000	
BENZO(a)PYRENE	UG/KG	ND	33000	
BENZO(b)FLUORANTHENE	UG/KG	62000	33000	
BENZO(g,h,i)PERYLENE	UG/KG	ND	33000	
BENZO(k)FLUORANTHENE	UG/KG	72000	33000	
BENZYL ALCOHOL	UG/KG	ND	33000	
BIS(2-CHLOROETHYL)ETHER	UG/KG	ND	33000	
BIS(2-CHLOROETHOXY)METHANE	UG/KG	ND	33000	
BIS(2-CHLOROISOPROPYL)ETHER	UG/KG	ND	33000	
BIS(2-ETHYLHEXYL)PHTHALATE	UG/KG	ND	33000	
4-BROMOPHENYL-PHENYLETHER	UG/KG	ND	33000	
BUTYLBENZYLPHTHALATE	UG/KG	ND	33000	
4-CHLOROANILINE	UG/KG	ND	33000	
1-CHLORONAPHTHALENE	UG/KG	ND	33000	
2-CHLORONAPHTHALENE	UG/KG	ND	33000	
4-CHLOROPHENYL-PHENYLETHER	UG/KG	ND	33000	
CHRYSENE	UG/KG	53000	33000	
DIBENZO(A,H)ANTHRACENE	UG/KG	ND	33000	
DIBENZ(A,J)ACRIDINE	UG/KG	ND	33000	
DIBENZOFURAN	UG/KG	ND	33000	
1,2-DICHLOROBENZENE	UG/KG	ND	33000	
1,3-DICHLOROBENZENE	UG/KG	ND	33000	
1,4-DICHLOROBENZENE	UG/KG	ND	33000	
3,3'-DICHLOROBENZIDINE	UG/KG	ND	170000	
DIETHYLPHTHALATE	UG/KG	ND	33000	
P-DIMETHYLAMINOAZOBENZENE	UG/KG	ND	33000	
7,12-DIMETHYLBENZO(a)ANTHRACENE	UG/KG	ND	33000	
A-,A-DIMETHYLPHENETHYLAMINE	UG/KG	ND	33000	
DIMETHYLPHTHALATE	UG/KG	ND	33000	
DI-N-BUTYLPHTHALATE	UG/KG	ND	33000	
2,4-DINITROTOLUENE	UG/KG	ND	33000	
2,6-DINITROTOLUENE	UG/KG	ND	33000	
DI-N-OCTYLPHTHALATE	UG/KG	ND	33000	

"FINAL REPORT FORMAT - SINGLE"

Accession: 603602
Client: CSX TRANSPORTATION
Project Number: 4365B
Project Name: CSXT-GREENVILLE
Project Location: GREENVILLE, SC
Test: BN EXTRACTABLES (8270)
Analysis Method: 8270 / SW-846, 3rd Edition, September 1986 and Rev. 1, July 1992.
Extraction Method: 3550 / SW-846, 3rd Edition, September 1986 and Rev. 1, July 1992.
Matrix: SOIL
QC Level: II

Lab Id: 004
Client Sample Id: DP 29
Sample Date/Time: 27-MAR-96 1045
Received Date: 29-MAR-96

Parameter:	Units:	Results:	Rpt Lmts:	Q:
DIPHENYLAMINE	UG/KG	ND	33000	
1,2-DIPHENYLHYDRAZINE	UG/KG	ND	33000	
FLUORANTHENE	UG/KG	ND	33000	
FLUORENE	UG/KG	ND	33000	
HEXACHLOROBENZENE	UG/KG	ND	33000	
HEXACHLOROBUTADIENE	UG/KG	ND	33000	
HEXACHLOROCYCLOPENTADIENE	UG/KG	ND	33000	
HEXACHLOROETHANE	UG/KG	ND	33000	
INDENO(1,2,3-cd)PYRENE	UG/KG	ND	33000	
ISOPHORONE	UG/KG	ND	33000	
3-METHYLCHOLANTHRENE	UG/KG	ND	33000	
2-METHYLNAPHTHALENE	UG/KG	ND	33000	
NAPHTHALENE	UG/KG	ND	33000	
1-NAPHTHYLAMINE	UG/KG	ND	33000	
2-NAPHTHYLAMINE	UG/KG	ND	33000	
2-NITROANILINE	UG/KG	ND	33000	
3-NITROANILINE	UG/KG	ND	33000	
4-NITROANILINE	UG/KG	ND	33000	
NITROBENZENE	UG/KG	ND	33000	
N-NITROSODIMETHYLAMINE	UG/KG	ND	33000	
N-NITROSODI-N-BUTYLAMINE	UG/KG	ND	33000	
N-NITROSODIPHENYLAMINE	UG/KG	ND	33000	
N-NITROSO-DI-N-PROPYLAMINE	UG/KG	ND	33000	
N-NITROSOPIPERIDINE	UG/KG	ND	33000	
PENTACHLOROBENZENE	UG/KG	ND	33000	
PENTACHLORONITROBENZENE (PCNB)	UG/KG	ND	33000	
PHENACETIN	UG/KG	ND	33000	
PHENANTHRENE	UG/KG	ND	33000	
2-PICOLINE	UG/KG	ND	33000	
PRONAMIDE	UG/KG	ND	33000	
PYRENE	UG/KG	ND	33000	
1,2,4,5-TETRACHLOROBENZENE	UG/KG	ND	33000	
1,2,4 TRICHLOROBENZENE	UG/KG	ND	33000	
2-FLUOROBIPHENYL	%REC/SURR	D	30-115	
NITROBENZENE-D5	%REC/SURR	D	23-120	
TERPHENYL-D14	%REC/SURR	D	18-137	
ANALYST	INITIALS	PL		

Comments:

"FINAL REPORT FORMAT - SINGLE"

Accession: 603602
Client: CSX TRANSPORTATION
Project Number: 4365B
Project Name: CSXT-GREENVILLE
Project Location: GREENVILLE, SC
Test: BN EXTRACTABLES (8270)
Analysis Method: 8270 / SW-846, 3rd Edition, September 1986 and Rev. 1, July 1992.
Extraction Method: 3550 / SW-846, 3rd Edition, September 1986 and Rev. 1, July 1992.
Matrix: SOIL
QC Level: II

Lab Id: 005 Sample Date/Time: 27-MAR-96 1105
Client Sample Id: DP 9 Received Date: 29-MAR-96

Batch: ALS023 Extraction Date: 01-APR-96
Blank: A Dry Weight %: 85 Analysis Date: 04-APR-96

Parameter:	Units:	Results:	Rpt Lmts:	Q:
ACENAPHTHENE	UG/KG	ND	6700	
ACENAPHTHYLENE	UG/KG	7900	6700	
ACETOPHENONE	UG/KG	ND	6700	
4-AMINOBIPHENYL	UG/KG	ND	6700	
ANILINE	UG/KG	ND	6700	
ANTHRACENE	UG/KG	ND	6700	
BENZIDINE	UG/KG	ND	6700	
BENZO(a)ANTHRACENE	UG/KG	12000	6700	
BENZO(a)PYRENE	UG/KG	20000	6700	
BENZO(b)FLUORANTHENE	UG/KG	14000	6700	
BENZO(g,h,i)PERYLENE	UG/KG	15000	6700	
BENZO(k)FLUORANTHENE	UG/KG	17000	6700	
BENZYL ALCOHOL	UG/KG	ND	6700	
BIS(2-CHLOROETHYL)ETHER	UG/KG	ND	6700	
BIS(2-CHLOROETHOXY)METHANE	UG/KG	ND	6700	
BIS(2-CHLOROISOPROPYL)ETHER	UG/KG	ND	6700	
BIS(2-ETHYLHEXYL)PHTHALATE	UG/KG	ND	6700	
4-BROMOPHENYL-PHENYLETHER	UG/KG	ND	6700	
BUTYLBENZYLPHTHALATE	UG/KG	ND	6700	
4-CHLOROANILINE	UG/KG	ND	6700	
1-CHLORONAPHTHALENE	UG/KG	ND	6700	
2-CHLORONAPHTHALENE	UG/KG	ND	6700	
4-CHLOROPHENYL-PHENYLETHER	UG/KG	ND	6700	
CHRYSENE	UG/KG	14000	6700	
DIBENZO(A,H)ANTHRACENE	UG/KG	ND	6700	
DIBENZ(A,J)ACRIDINE	UG/KG	ND	6700	
DIBENZOFURAN	UG/KG	ND	6700	
1,2-DICHLOROBENZENE	UG/KG	ND	6700	
1,3-DICHLOROBENZENE	UG/KG	ND	6700	
1,4-DICHLOROBENZENE	UG/KG	ND	6700	
3,3'-DICHLOROBENZIDINE	UG/KG	ND	33000	
DIETHYLPHTHALATE	UG/KG	ND	6700	
P-DIMETHYLAMINOAZOBENZENE	UG/KG	ND	6700	
7,12-DIMETHYLBENZO(a)ANTHRACENE	UG/KG	ND	6700	
A-,A-DIMETHYLPHENETHYLAMINE	UG/KG	ND	6700	
DIMETHYLPHTHALATE	UG/KG	ND	6700	
DI-N-BUTYLPHTHALATE	UG/KG	ND	6700	
2,4-DINITROTOLUENE	UG/KG	ND	6700	
2,6-DINITROTOLUENE	UG/KG	ND	6700	
DI-N-OCTYLPHTHALATE	UG/KG	ND	6700	

"FINAL REPORT FORMAT - SINGLE"

Accession: 603602
Client: CSX TRANSPORTATION
Project Number: 4365B
Project Name: CSXT-GREENVILLE
Project Location: GREENVILLE, SC
Test: BN EXTRACTABLES (8270)
Analysis Method: 8270 / SW-846, 3rd Edition, September 1986 and Rev. 1, July 1992.
Extraction Method: 3550 / SW-846, 3rd Edition, September 1986 and Rev. 1, July 1992.
Matrix: SOIL
QC Level: II

Lab Id: 005
Client Sample Id: DP 9
Sample Date/Time: 27-MAR-96 1105
Received Date: 29-MAR-96

Parameter:	Units:	Results:	Rpt Lmts:	Q:
DIPHENYLAMINE	UG/KG	ND	6700	
1,2-DIPHENYLHYDRAZINE	UG/KG	ND	6700	
FLUORANTHENE	UG/KG	22000	6700	
FLUORENE	UG/KG	ND	6700	
HEXACHLOROBENZENE	UG/KG	ND	6700	
HEXACHLOROBUTADIENE	UG/KG	ND	6700	
HEXACHLOROCYCLOPENTADIENE	UG/KG	ND	6700	
HEXACHLOROETHANE	UG/KG	ND	6700	
INDENO(1,2,3-cd)PYRENE	UG/KG	15000	6700	
ISOPHORONE	UG/KG	ND	6700	
3-METHYLCHOLANTHRENE	UG/KG	ND	6700	
2-METHYLNAPHTHALENE	UG/KG	ND	6700	
NAPHTHALENE	UG/KG	ND	6700	
1-NAPHTHYLAMINE	UG/KG	ND	6700	
2-NAPHTHYLAMINE	UG/KG	ND	6700	
2-NITROANILINE	UG/KG	ND	6700	
3-NITROANILINE	UG/KG	ND	6700	
4-NITROANILINE	UG/KG	ND	6700	
NITROBENZENE	UG/KG	ND	6700	
N-NITROSODIMETHYLAMINE	UG/KG	ND	6700	
N-NITROSODI-N-BUTYLAMINE	UG/KG	ND	6700	
N-NITROSODIPHENYLAMINE	UG/KG	ND	6700	
N-NITROSO-DI-N-PROPYLAMINE	UG/KG	ND	6700	
N-NITROSOPIPERIDINE	UG/KG	ND	6700	
PENTACHLOROBENZENE	UG/KG	ND	6700	
PENTACHLORONITROBENZENE (PCNB)	UG/KG	ND	6700	
PHENACETIN	UG/KG	ND	6700	
PHENANTHRENE	UG/KG	15000	6700	
2-PICOLINE	UG/KG	ND	6700	
PRONAMIDE	UG/KG	ND	6700	
PYRENE	UG/KG	19000	6700	
1,2,4,5-TETRACHLOROBENZENE	UG/KG	ND	6700	
1,2,4 TRICHLOROBENZENE	UG/KG	ND	6700	
2-FLUOROBIPHENYL	%REC/SURR	71	30-115	
NITROBENZENE-D5	%REC/SURR	31	23-120	
TERPHENYL-D14	%REC/SURR	81	18-137	
ANALYST	INITIALS	PL		

Comments:

ANALYTICAL TECHNOLOGIES, INC. 11 East Olive Road Pensacola, Florida 32514 (904) 474-1001

Analysis Report

Analysis: Group of Single Wetchem

Accession:	603254
Client:	CSX TRANSPORTATION
Project Number:	4365B
Project Name:	CSX GREENVILLE
Project Location:	GREENVILLE, SC
Department:	WET CHEM

ANALYTICAL TECHNOLOGIES, INC. 11 East Olive Road Pensacola, Florida 32514 (904) 474-1001

"FINAL REPORT FORMAT - MULTIPLE"

Accession: 603254
Client: CSX TRANSPORTATION
Project Number: 4365B
Project Name: CSX GREENVILLE
Project Location: GREENVILLE, SC
Test: Group of Single Wetchem
QcLevel: II

Parameter:	Unit:	Result:	R.L:	Batch:	Q:
Client ID: MW-1			Lab ID: 001		
SULFATE (375.4)	MG/L	ND	10	SEW016	
Comments:					
Client ID: MW-3			Lab ID: 004		
SULFATE (375.4)	MG/L	640	250	SEW016	+
Comments:					
Client ID: MW-3D			Lab ID: 005		
SULFATE (375.4)	MG/L	35	20	SEW016	+
Comments:					
Client ID: MW-6			Lab ID: 008		
SULFATE (375.4)	MG/L	160	50	SEW016	+
Comments:					

ANALYTICAL TECHNOLOGIES, INC. 11 East Olive Road Pensacola, Florida 32514 (904) 474-1001

"FINAL REPORT FORMAT - MULTIPLE"

Accession: 603254
Client: CSX TRANSPORTATION
Project Number: 4365B
Project Name: CSX GREENVILLE
Project Location: GREENVILLE, SC
Test: Group of Single Wetchem

Client ID:	Lab ID:	Matrix:	Date/Time Sampled:	Date Received:
MW-1	001	GROUNDWATER	13-MAR-96 1520	14-MAR-96
MW-3	004	GROUNDWATER	13-MAR-96 1425	14-MAR-96
MW-3D	005	GROUNDWATER	13-MAR-96 1450	14-MAR-96
MW-6	008	GROUNDWATER	13-MAR-96 1615	14-MAR-96

ANALYTICAL TECHNOLOGIES, INC. 11 East Olive Road Pensacola, Florida 32514 (904) 474-1001

Analysis Report

Analysis: SW 846 8260 TABLE SIX

Accession:	603254
Client:	CSX TRANSPORTATION
Project Number:	4365B
Project Name:	CSX GREENVILLE
Project Location:	GREENVILLE, SC
Department:	ORGANIC/MS

ANALYTICAL TECHNOLOGIES, INC. 11 East Olive Road Pensacola, Florida 32514 (904) 474-1001

"FINAL REPORT FORMAT - SINGLE"

Accession: 603254
Client: CSX TRANSPORTATION
Project Number: 4365B
Project Name: CSX GREENVILLE
Project Location: GREENVILLE, SC
Test: SW 846 8260 TABLE SIX
Analysis Method: 8260 / SW-846, 3rd Edition, September 1986 and Rev. 1, July 1992.
Extraction Method: N/A
Matrix: GROUNDWATER
QC Level: II

Lab Id: 001
Client Sample Id: MW-1
Sample Date/Time: 13-MAR-96 1520
Received Date: 14-MAR-96

Batch: MAW025
Blank: A
Dry Weight %: N/A
Extraction Date: N/A
Analysis Date: 22-MAR-96

Parameter:	Units:	Results:	Rpt Lmts:	Q:
BENZENE	UG/L	ND	250	
BROMOBENZENE	UG/L	ND	250	
BROMOCHLOROMETHANE	UG/L	ND	250	
BROMODICHLOROMETHANE	UG/L	ND	250	
BROMOFORM	UG/L	ND	250	
BROMOMETHANE	UG/L	ND	250	
CARBON TETRACHLORIDE	UG/L	ND	250	
CHLOROBENZENE	UG/L	ND	250	
CHLOROETHANE	UG/L	ND	250	
CHLOROFORM	UG/L	ND	250	
CHLOROMETHANE	UG/L	ND	250	
2-CHLOROTOLUENE	UG/L	ND	250	
4-CHLOROTOLUENE	UG/L	ND	250	
CIS 1,2 DICHLOROETHYLENE	UG/L	ND	250	
CHLORODIBROMOMETHANE	UG/L	ND	250	
DIBROMOMETHANE	UG/L	ND	250	
1,4-DICHLOROBENZENE	UG/L	ND	250	
1,3-DICHLOROBENZENE	UG/L	ND	250	
1,2-DICHLOROBENZENE	UG/L	ND	250	
DICHLORODIFLUOROMETHANE	UG/L	ND	250	
1,1-DICHLOROETHANE	UG/L	ND	250	
1,2-DICHLOROETHANE	UG/L	ND	250	
1,1-DICHLOROETHENE	UG/L	ND	250	
1,3 DICHLOROPROPANE	UG/L	ND	250	
2,2-DICHLOROPROPANE	UG/L	ND	250	
1,2-DICHLOROPROPANE	UG/L	ND	250	
CIS-1,3-DICHLOROPROPENE	UG/L	ND	250	
TRANS-1,3-DICHLOROPROPENE	UG/L	ND	250	
1,1 DICHLOROPROPENE	UG/L	ND	250	
ETHYL BENZENE	UG/L	ND	250	
HEXACHLOROBUTADIENE	UG/L	ND	250	
ISOPROPYL BENZENE	UG/L	ND	250	
P-ISOPROPYLTOLUENE	UG/L	ND	250	
METHYLENE CHLORIDE	UG/L	ND	250	
NAPHTHALENE	UG/L	3800	250	
N-BUTYL BENZENE	UG/L	ND	250	
N-PROPYL BENZENE	UG/L	ND	250	
SEC-BUTYL BENZENE	UG/L	ND	250	
STYRENE	UG/L	ND	250	
TERT-BUTYL BENZENE	UG/L	ND	250	

"FINAL REPORT FORMAT - SINGLE"

Accession: 603254
Client: CSX TRANSPORTATION
Project Number: 4365B
Project Name: CSX GREENVILLE
Project Location: GREENVILLE, SC
Test: SW 846 8260 TABLE SIX
Analysis Method: 8260 / SW-846, 3rd Edition, September 1986 and Rev. 1, July 1992.
Extraction Method: N/A
Matrix: GROUNDWATER
QC Level: II

Lab Id: 001
Client Sample Id: MW-1
Sample Date/Time: 13-MAR-96 1520
Received Date: 14-MAR-96

Parameter:	Units:	Results:	Rpt Lmts:	Q:
1,1,1,2-TETRACHLOROETHANE	UG/L	ND	250	
1,1,2,2-TETRACHLOROETHANE	UG/L	ND	250	
TETRACHLOROETHENE	UG/L	ND	250	
TOLUENE	UG/L	ND	250	
TRANS 1,2 DICHLOROETHYLENE	UG/L	ND	250	
1,1,1-TRICHLOROETHANE	UG/L	ND	250	
1,1,2-TRICHLOROETHANE	UG/L	ND	250	
1,2,3 TRICHLOROBENZENE	UG/L	ND	250	
1,2,4 TRICHLOROBENZENE	UG/L	ND	250	
TRICHLOROETHENE	UG/L	ND	250	
TRICHLOROFLUOROMETHANE	UG/L	ND	250	
1,2,3 TRICHLOROPROPANE	UG/L	ND	250	
1,2,4-TRIMETHYLBENZENE	UG/L	ND	250	
1,3,5-TRIMETHYLBENZENE	UG/L	ND	250	
VINYL CHLORIDE	UG/L	ND	250	
M,P-XYLENE	UG/L	ND	250	
O-XYLENE	UG/L	ND	250	
DIBROMOFLUOROMETHANE	%REC/SURR	99	74-124	
TOLUENE-D8	%REC/SURR	101	61-128	
BROMOFLUOROBENZENE	%REC/SURR	96	65-138	
ANALYST	INITIALS	LL		

Comments:

"FINAL REPORT FORMAT - SINGLE"

Accession: 603254
Client: CSX TRANSPORTATION
Project Number: 4365B
Project Name: CSX GREENVILLE
Project Location: GREENVILLE, SC
Test: SW 846 8260 TABLE SIX
Analysis Method: 8260 / SW-846, 3rd Edition, September 1986 and Rev. 1, July 1992.
Extraction Method: N/A
Matrix: GROUNDWATER
QC Level: II

Lab Id: 002 Sample Date/Time: 13-MAR-96 1700
Client Sample Id: MW-2 Received Date: 14-MAR-96

Batch: MAW025 Extraction Date: N/A
Blank: A Dry Weight %: N/A Analysis Date: 22-MAR-96

Parameter:	Units:	Results:	Rpt Lmts:	Q:
BENZENE	UG/L	ND	5	
BROMOBENZENE	UG/L	ND	5	
BROMOCHLOROMETHANE	UG/L	ND	5	
BROMODICHLOROMETHANE	UG/L	ND	5	
BROMOFORM	UG/L	ND	5	
BROMOMETHANE	UG/L	ND	5	
CARBON TETRACHLORIDE	UG/L	ND	5	
CHLOROBENZENE	UG/L	ND	5	
CHLOROETHANE	UG/L	ND	5	
CHLOROFORM	UG/L	ND	5	
CHLOROMETHANE	UG/L	ND	5	
2-CHLOROTOLUENE	UG/L	ND	5	
4-CHLOROTOLUENE	UG/L	ND	5	
CIS 1,2 DICHLOROETHYLENE	UG/L	ND	5	
CHLORODIBROMOMETHANE	UG/L	ND	5	
DIBROMOMETHANE	UG/L	ND	5	
1,4-DICHLOROBENZENE	UG/L	ND	5	
1,3-DICHLOROBENZENE	UG/L	ND	5	
1,2-DICHLOROBENZENE	UG/L	ND	5	
DICHLORODIFLUOROMETHANE	UG/L	ND	5	
1,1-DICHLOROETHANE	UG/L	ND	5	
1,2-DICHLOROETHANE	UG/L	ND	5	
1,1-DICHLOROETHENE	UG/L	ND	5	
1,3 DICHLOROPROPANE	UG/L	ND	5	
2,2-DICHLOROPROPANE	UG/L	ND	5	
1,2-DICHLOROPROPANE	UG/L	ND	5	
CIS-1,3-DICHLOROPROPENE	UG/L	ND	5	
TRANS-1,3-DICHLOROPROPENE	UG/L	ND	5	
1,1 DICHLOROPROPENE	UG/L	ND	5	
ETHYL BENZENE	UG/L	ND	5	
HEXACHLOROBUTADIENE	UG/L	ND	5	
ISOPROPYL BENZENE	UG/L	ND	5	
P-ISOPROPYLTOLUENE	UG/L	ND	5	
METHYLENE CHLORIDE	UG/L	ND	5	
NAPHTHALENE	UG/L	ND	5	
N-BUTYL BENZENE	UG/L	ND	5	
N-PROPYL BENZENE	UG/L	ND	5	
SEC-BUTYL BENZENE	UG/L	ND	5	
STYRENE	UG/L	ND	5	
TERT-BUTYL BENZENE	UG/L	ND	5	

"FINAL REPORT FORMAT - SINGLE"

Accession: 603254
Client: CSX TRANSPORTATION
Project Number: 4365B
Project Name: CSX GREENVILLE
Project Location: GREENVILLE, SC
Test: SW 846 8260 TABLE SIX
Analysis Method: 8260 / SW-846, 3rd Edition, September 1986 and Rev. 1, July 1992.
Extraction Method: N/A
Matrix: GROUNDWATER
QC Level: II

Lab Id: 002
Client Sample Id: MW-2
Sample Date/Time: 13-MAR-96 1700
Received Date: 14-MAR-96

Parameter:	Units:	Results:	Rpt Lmts:	Q:
1,1,1,2-TETRACHLOROETHANE	UG/L	ND	5	
1,1,2,2-TETRACHLOROETHANE	UG/L	ND	5	
TETRACHLOROETHENE	UG/L	ND	5	
TOLUENE	UG/L	ND	5	
TRANS 1,2 DICHLOROETHYLENE	UG/L	ND	5	
1,1,1-TRICHLOROETHANE	UG/L	ND	5	
1,1,2-TRICHLOROETHANE	UG/L	ND	5	
1,2,3 TRICHLOROBENZENE	UG/L	ND	5	
1,2,4 TRICHLOROBENZENE	UG/L	ND	5	
TRICHLOROETHENE	UG/L	ND	5	
TRICHLOROFLUOROMETHANE	UG/L	ND	5	
1,2,3 TRICHLOROPROPANE	UG/L	ND	5	
1,2,4-TRIMETHYLBENZENE	UG/L	ND	5	
1,3,5-TRIMETHYLBENZENE	UG/L	ND	5	
VINYL CHLORIDE	UG/L	ND	5	
M,P-XYLENE	UG/L	ND	5	
O-XYLENE	UG/L	ND	5	
DIBROMOFLUOROMETHANE	%REC/SURR	99	74-124	
TOLUENE-D8	%REC/SURR	105	61-128	
BROMOFLUOROBENZENE	%REC/SURR	99	65-138	
ANALYST	INITIALS	LL		

Comments:

"FINAL REPORT FORMAT - SINGLE"

Accession: 603254
Client: CSX TRANSPORTATION
Project Number: 4365B
Project Name: CSX GREENVILLE
Project Location: GREENVILLE, SC
Test: SW 846 8260 TABLE SIX
Analysis Method: 8260 / SW-846, 3rd Edition, September 1986 and Rev. 1, July 1992.
Extraction Method: N/A
Matrix: GROUNDWATER
QC Level: II

Lab Id: 003
Client Sample Id: MW-2 DUP
Sample Date/Time: 13-MAR-96 1700
Received Date: 14-MAR-96

Batch: MAW025
Blank: A
Dry Weight %: N/A
Extraction Date: N/A
Analysis Date: 22-MAR-96

Parameter:	Units:	Results:	Rpt Lmts:	Q:
BENZENE	UG/L	ND	5	
BROMOBENZENE	UG/L	ND	5	
BROMOCHLOROMETHANE	UG/L	ND	5	
BROMODICHLOROMETHANE	UG/L	ND	5	
BROMOFORM	UG/L	ND	5	
BROMOMETHANE	UG/L	ND	5	
CARBON TETRACHLORIDE	UG/L	ND	5	
CHLOROBENZENE	UG/L	ND	5	
CHLOROETHANE	UG/L	ND	5	
CHLOROFORM	UG/L	ND	5	
CHLOROMETHANE	UG/L	ND	5	
2-CHLOROTOLUENE	UG/L	ND	5	
4-CHLOROTOLUENE	UG/L	ND	5	
CIS 1,2 DICHLOROETHYLENE	UG/L	ND	5	
CHLORODIBROMOMETHANE	UG/L	ND	5	
DIBROMOMETHANE	UG/L	ND	5	
1,4-DICHLOROBENZENE	UG/L	ND	5	
1,3-DICHLOROBENZENE	UG/L	ND	5	
1,2-DICHLOROBENZENE	UG/L	ND	5	
DICHLORODIFLUOROMETHANE	UG/L	ND	5	
1,1-DICHLOROETHANE	UG/L	ND	5	
1,2-DICHLOROETHANE	UG/L	ND	5	
1,1-DICHLOROETHENE	UG/L	ND	5	
1,3 DICHLOROPROPANE	UG/L	ND	5	
2,2-DICHLOROPROPANE	UG/L	ND	5	
1,2-DICHLOROPROPANE	UG/L	ND	5	
CIS-1,3-DICHLOROPROPENE	UG/L	ND	5	
TRANS-1,3-DICHLOROPROPENE	UG/L	ND	5	
1,1 DICHLOROPROPENE	UG/L	ND	5	
ETHYL BENZENE	UG/L	ND	5	
HEXACHLOROBUTADIENE	UG/L	ND	5	
ISOPROPYL BENZENE	UG/L	ND	5	
P-ISOPROPYLTOLUENE	UG/L	ND	5	
METHYLENE CHLORIDE	UG/L	ND	5	
NAPHTHALENE	UG/L	ND	5	
N-BUTYL BENZENE	UG/L	ND	5	
N-PROPYL BENZENE	UG/L	ND	5	
SEC-BUTYL BENZENE	UG/L	ND	5	
STYRENE	UG/L	ND	5	
TERT-BUTYL BENZENE	UG/L	ND	5	

"FINAL REPORT FORMAT - SINGLE"

Accession: 603254
Client: CSX TRANSPORTATION
Project Number: 4365B
Project Name: CSX GREENVILLE
Project Location: GREENVILLE, SC
Test: SW 846 8260 TABLE SIX
Analysis Method: 8260 / SW-846, 3rd Edition, September 1986 and Rev. 1, July 1992.
Extraction Method: N/A
Matrix: GROUNDWATER
QC Level: II

Lab Id: 003
Client Sample Id: MW-2 DUP
Sample Date/Time: 13-MAR-96 1700
Received Date: 14-MAR-96

Parameter:	Units:	Results:	Rpt Lmts:	Q:
1,1,1,2-TETRACHLOROETHANE	UG/L	ND	5	
1,1,2,2-TETRACHLOROETHANE	UG/L	ND	5	
TETRACHLOROETHENE	UG/L	ND	5	
TOLUENE	UG/L	ND	5	
TRANS 1,2 DICHLOROETHYLENE	UG/L	ND	5	
1,1,1-TRICHLOROETHANE	UG/L	ND	5	
1,1,2-TRICHLOROETHANE	UG/L	ND	5	
1,2,3 TRICHLOROBENZENE	UG/L	ND	5	
1,2,4 TRICHLOROBENZENE	UG/L	ND	5	
TRICHLOROETHENE	UG/L	ND	5	
TRICHLOROFLUOROMETHANE	UG/L	ND	5	
1,2,3 TRICHLOROPROPANE	UG/L	ND	5	
1,2,4-TRIMETHYLBENZENE	UG/L	ND	5	
1,3,5-TRIMETHYLBENZENE	UG/L	ND	5	
VINYL CHLORIDE	UG/L	ND	5	
M,P-XYLENE	UG/L	ND	5	
O-XYLENE	UG/L	ND	5	
DIBROMOFLUOROMETHANE	%REC/SURR	101	74-124	
TOLUENE-D8	%REC/SURR	104	61-128	
BROMOFLUOROBENZENE	%REC/SURR	98	65-138	
ANALYST	INITIALS	LL		

Comments:

ANALYTICAL TECHNOLOGIES, INC. 11 East Olive Road Pensacola, Florida 32514 (904) 474-1001

"FINAL REPORT FORMAT - SINGLE"

Accession: 603254
Client: CSX TRANSPORTATION
Project Number: 4365B
Project Name: CSX GREENVILLE
Project Location: GREENVILLE, SC
Test: SW 846 8260 TABLE SIX
Analysis Method: 8260 / SW-846, 3rd Edition, September 1986 and Rev. 1, July 1992.
Extraction Method: N/A
Matrix: GROUNDWATER
QC Level: II

Lab Id: 004
Client Sample Id: MW-3
Sample Date/Time: 13-MAR-96 1425
Received Date: 14-MAR-96

Batch: MAW025
Blank: A
Dry Weight %: N/A
Extraction Date: N/A
Analysis Date: 22-MAR-96

Parameter:	Units:	Results:	Rpt Lmts:	Q:
BENZENE	UG/L	160	5	
BROMOBENZENE	UG/L	ND	5	
BROMOCHLOROMETHANE	UG/L	ND	5	
BROMODICHLOROMETHANE	UG/L	ND	5	
BROMOFORM	UG/L	ND	5	
BROMOMETHANE	UG/L	ND	5	
CARBON TETRACHLORIDE	UG/L	ND	5	
CHLOROBENZENE	UG/L	ND	5	
CHLOROETHANE	UG/L	ND	5	
CHLOROFORM	UG/L	ND	5	
CHLOROMETHANE	UG/L	ND	5	
2-CHLOROTOLUENE	UG/L	ND	5	
4-CHLOROTOLUENE	UG/L	ND	5	
CIS 1,2 DICHLOROETHYLENE	UG/L	ND	5	
CHLORODIBROMOMETHANE	UG/L	ND	5	
DIBROMOMETHANE	UG/L	ND	5	
1,4-DICHLOROBENZENE	UG/L	ND	5	
1,3-DICHLOROBENZENE	UG/L	ND	5	
1,2-DICHLOROBENZENE	UG/L	ND	5	
DICHLORODIFLUOROMETHANE	UG/L	ND	5	
1,1-DICHLOROETHANE	UG/L	ND	5	
1,2-DICHLOROETHANE	UG/L	ND	5	
1,1-DICHLOROETHENE	UG/L	ND	5	
1,3 DICHLOROPROPANE	UG/L	ND	5	
2,2-DICHLOROPROPANE	UG/L	ND	5	
1,2-DICHLOROPROPANE	UG/L	ND	5	
CIS-1,3-DICHLOROPROPENE	UG/L	ND	5	
TRANS-1,3-DICHLOROPROPENE	UG/L	ND	5	
1,1 DICHLOROPROPENE	UG/L	ND	5	
ETHYL BENZENE	UG/L	100	5	
HEXACHLOROBUTADIENE	UG/L	ND	5	
ISOPROPYL BENZENE	UG/L	ND	5	
P-ISOPROPYLTOLUENE	UG/L	ND	5	
METHYLENE CHLORIDE	UG/L	ND	5	
NAPHTHALENE	UG/L	15000	500	
N-BUTYL BENZENE	UG/L	ND	5	
N-PROPYL BENZENE	UG/L	ND	5	
SEC-BUTYL BENZENE	UG/L	ND	5	
STYRENE	UG/L	50	5	
TERT-BUTYL BENZENE	UG/L	ND	5	

ANALYTICAL TECHNOLOGIES, INC. 11 East Olive Road Pensacola, Florida 32514 (904) 474-1001

"FINAL REPORT FORMAT - SINGLE"

Accession: 603254
Client: CSX TRANSPORTATION
Project Number: 4365B
Project Name: CSX GREENVILLE
Project Location: GREENVILLE, SC
Test: SW 846 8260 TABLE SIX
Analysis Method: 8260 / SW-846, 3rd Edition, September 1986 and Rev. 1, July 1992.
Extraction Method: N/A
Matrix: GROUNDWATER
QC Level: II

Lab Id: 004
Client Sample Id: MW-3

Sample Date/Time: 13-MAR-96 1425
Received Date: 14-MAR-96

Parameter:	Units:	Results:	Rpt Lmts:	Q:
1,1,1,2-TETRACHLOROETHANE	UG/L	ND	5	
1,1,2,2-TETRACHLOROETHANE	UG/L	ND	5	
TETRACHLOROETHENE	UG/L	ND	5	
TOLUENE	UG/L	140	5	
TRANS 1,2 DICHLOROETHYLENE	UG/L	ND	5	
1,1,1-TRICHLOROETHANE	UG/L	ND	5	
1,1,2-TRICHLOROETHANE	UG/L	ND	5	
1,2,3 TRICHLOROBENZENE	UG/L	ND	5	
1,2,4 TRICHLOROBENZENE	UG/L	ND	5	
TRICHLOROETHENE	UG/L	ND	5	
TRICHLOROFLUOROMETHANE	UG/L	ND	5	
1,2,3 TRICHLOROPROPANE	UG/L	ND	5	
1,2,4-TRIMETHYLBENZENE	UG/L	50	5	
1,3,5-TRIMETHYLBENZENE	UG/L	17	5	
VINYL CHLORIDE	UG/L	ND	5	
M,P-XYLENE	UG/L	100	5	
O-XYLENE	UG/L	48	5	
DIBROMOFLUOROMETHANE	%REC/SURR	105	74-124	
TOLUENE-D8	%REC/SURR	106	61-128	
BROMOFLUOROBENZENE	%REC/SURR	103	65-138	
ANALYST	INITIALS	LL		

Comments:

ANALYTICAL TECHNOLOGIES, INC. 11 East Olive Road Pensacola, Florida 32514 (904) 474-1001

"FINAL REPORT FORMAT - SINGLE"

Accession: 603254
Client: CSX TRANSPORTATION
Project Number: 4365B
Project Name: CSX GREENVILLE
Project Location: GREENVILLE, SC
Test: SW 846 8260 TABLE SIX
Analysis Method: 8260 / SW-846, 3rd Edition, September 1986 and Rev. 1, July 1992.
Extraction Method: N/A
Matrix: GROUNDWATER
QC Level: II

Lab Id: 005
Client Sample Id: MW-3D
Sample Date/Time: 13-MAR-96 1450
Received Date: 14-MAR-96

Batch: MAW025
Blank: A
Dry Weight %: N/A
Extraction Date: N/A
Analysis Date: 22-MAR-96

Parameter:	Units:	Results:	Rpt Lmts:	Q:
BENZENE	UG/L	1100	1000	
BROMOBENZENE	UG/L	ND	5	
BROMOCHLOROMETHANE	UG/L	ND	5	
BROMODICHLOROMETHANE	UG/L	ND	5	
BROMOFORM	UG/L	ND	5	
BROMOMETHANE	UG/L	ND	5	
CARBON TETRACHLORIDE	UG/L	ND	5	
CHLOROBENZENE	UG/L	ND	5	
CHLOROETHANE	UG/L	ND	5	
CHLOROFORM	UG/L	ND	5	
CHLOROMETHANE	UG/L	ND	5	
2-CHLOROTOLUENE	UG/L	ND	5	
4-CHLOROTOLUENE	UG/L	ND	5	
CIS 1,2 DICHLOROETHYLENE	UG/L	ND	5	
CHLORODIBROMOMETHANE	UG/L	ND	5	
DIBROMOMETHANE	UG/L	ND	5	
1,4-DICHLOROBENZENE	UG/L	ND	5	
1,3-DICHLOROBENZENE	UG/L	ND	5	
1,2-DICHLOROBENZENE	UG/L	ND	5	
DICHLORODIFLUOROMETHANE	UG/L	ND	5	
1,1-DICHLOROETHANE	UG/L	ND	5	
1,2-DICHLOROETHANE	UG/L	ND	5	
1,1-DICHLOROETHENE	UG/L	ND	5	
1,3 DICHLOROPROPANE	UG/L	ND	5	
2,2-DICHLOROPROPANE	UG/L	ND	5	
1,2-DICHLOROPROPANE	UG/L	ND	5	
CIS-1,3-DICHLOROPROPENE	UG/L	ND	5	
TRANS-1,3-DICHLOROPROPENE	UG/L	ND	5	
1,1 DICHLOROPROPENE	UG/L	ND	5	
ETHYL BENZENE	UG/L	380	5	
HEXACHLOROBUTADIENE	UG/L	ND	5	
ISOPROPYL BENZENE	UG/L	9	5	
P-ISOPROPYLTOLUENE	UG/L	ND	5	
METHYLENE CHLORIDE	UG/L	ND	5	
NAPHTHALENE	UG/L	9300	1000	
N-BUTYL BENZENE	UG/L	ND	5	
N-PROPYL BENZENE	UG/L	ND	5	
SEC-BUTYL BENZENE	UG/L	ND	5	
STYRENE	UG/L	14	5	
TERT-BUTYL BENZENE	UG/L	ND	5	

ANALYTICAL TECHNOLOGIES, INC. 11 East Olive Road Pensacola, Florida 32514 (904) 474-1001

"FINAL REPORT FORMAT - SINGLE"

Accession: 603254
Client: CSX TRANSPORTATION
Project Number: 4365B
Project Name: CSX GREENVILLE
Project Location: GREENVILLE, SC
Test: SW 846 8260 TABLE SIX
Analysis Method: 8260 / SW-846, 3rd Edition, September 1986 and Rev. 1, July 1992.
Extraction Method: N/A
Matrix: GROUNDWATER
QC Level: II

Lab Id: 005
Client Sample Id: MW-3D

Sample Date/Time: 13-MAR-96 1450
Received Date: 14-MAR-96

Parameter:	Units:	Results:	Rpt Lmts:	Q:
1,1,1,2-TETRACHLOROETHANE	UG/L	ND	5	
1,1,2,2-TETRACHLOROETHANE	UG/L	ND	5	
TETRACHLOROETHENE	UG/L	ND	5	
TOLUENE	UG/L	160	5	
TRANS 1,2 DICHLOROETHYLENE	UG/L	ND	5	
1,1,1-TRICHLOROETHANE	UG/L	ND	5	
1,1,2-TRICHLOROETHANE	UG/L	ND	5	
1,2,3 TRICHLOROBENZENE	UG/L	ND	5	
1,2,4 TRICHLOROBENZENE	UG/L	ND	5	
TRICHLOROETHENE	UG/L	ND	5	
TRICHLOROFLUOROMETHANE	UG/L	ND	5	
1,2,3 TRICHLOROPROPANE	UG/L	ND	5	
1,2,4-TRIMETHYLBENZENE	UG/L	82	5	
1,3,5-TRIMETHYLBENZENE	UG/L	24	5	
VINYL CHLORIDE	UG/L	ND	5	
M,P-XYLENE	UG/L	210	5	
O-XYLENE	UG/L	120	5	
DIBROMOFLUOROMETHANE	%REC/SURR	103	74-124	
TOLUENE-D8	%REC/SURR	106	61-128	
BROMOFLUOROBENZENE	%REC/SURR	99	65-138	
ANALYST	INITIALS	LL		

Comments:

"FINAL REPORT FORMAT - SINGLE"

Accession: 603254
Client: CSX TRANSPORTATION
Project Number: 4365B
Project Name: CSX GREENVILLE
Project Location: GREENVILLE, SC
Test: SW 846 8260 TABLE SIX
Analysis Method: 8260 / SW-846, 3rd Edition, September 1986 and Rev. 1, July 1992.
Extraction Method: N/A
Matrix: GROUNDWATER
QC Level: II

Lab Id: 006
Client Sample Id: MW-4
Sample Date/Time: 13-MAR-96 1550
Received Date: 14-MAR-96

Batch: MAW025
Blank: B
Dry Weight %: N/A
Extraction Date: N/A
Analysis Date: 22-MAR-96

Parameter:	Units:	Results:	Rpt Lmts:	Q:
BENZENE	UG/L	ND	5	
BROMOBENZENE	UG/L	ND	5	
BROMOCHLOROMETHANE	UG/L	ND	5	
BROMODICHLOROMETHANE	UG/L	ND	5	
BROMOFORM	UG/L	ND	5	
BROMOMETHANE	UG/L	ND	5	
CARBON TETRACHLORIDE	UG/L	ND	5	
CHLOROBENZENE	UG/L	ND	5	
CHLOROETHANE	UG/L	ND	5	
CHLOROFORM	UG/L	ND	5	
CHLOROMETHANE	UG/L	ND	5	
2-CHLOROTOLUENE	UG/L	ND	5	
4-CHLOROTOLUENE	UG/L	ND	5	
CIS 1,2 DICHLOROETHYLENE	UG/L	ND	5	
CHLORODIBROMOMETHANE	UG/L	ND	5	
DIBROMOMETHANE	UG/L	ND	5	
1,4-DICHLOROBENZENE	UG/L	ND	5	
1,3-DICHLOROBENZENE	UG/L	ND	5	
1,2-DICHLOROBENZENE	UG/L	ND	5	
DICHLORODIFLUOROMETHANE	UG/L	ND	5	
1,1-DICHLOROETHANE	UG/L	ND	5	
1,2-DICHLOROETHANE	UG/L	ND	5	
1,1-DICHLOROETHENE	UG/L	ND	5	
1,3 DICHLOROPROPANE	UG/L	ND	5	
2,2-DICHLOROPROPANE	UG/L	ND	5	
1,2-DICHLOROPROPANE	UG/L	ND	5	
CIS-1,3-DICHLOROPROPENE	UG/L	ND	5	
TRANS-1,3-DICHLOROPROPENE	UG/L	ND	5	
1,1 DICHLOROPROPENE	UG/L	ND	5	
ETHYL BENZENE	UG/L	ND	5	
HEXACHLOROBUTADIENE	UG/L	ND	5	
ISOPROPYL BENZENE	UG/L	ND	5	
P-ISOPROPYLTOLUENE	UG/L	ND	5	
METHYLENE CHLORIDE	UG/L	ND	5	
NAPHTHALENE	UG/L	ND	5	
N-BUTYL BENZENE	UG/L	ND	5	
N-PROPYL BENZENE	UG/L	ND	5	
SEC-BUTYL BENZENE	UG/L	ND	5	
STYRENE	UG/L	ND	5	
TERT-BUTYL BENZENE	UG/L	ND	5	

"FINAL REPORT FORMAT - SINGLE"

Accession: 603254
Client: CSX TRANSPORTATION
Project Number: 4365B
Project Name: CSX GREENVILLE
Project Location: GREENVILLE, SC
Test: SW 846 8260 TABLE SIX
Analysis Method: 8260 / SW-846, 3rd Edition, September 1986 and Rev. 1, July 1992.
Extraction Method: N/A
Matrix: GROUNDWATER
QC Level: II

Lab Id: 006
Client Sample Id: MW-4

Sample Date/Time: 13-MAR-96 1550
Received Date: 14-MAR-96

Parameter:	Units:	Results:	Rpt Lmts:	Q:
1,1,1,2-TETRACHLOROETHANE	UG/L	ND	5	
1,1,2,2-TETRACHLOROETHANE	UG/L	ND	5	
TETRACHLOROETHENE	UG/L	ND	5	
TOLUENE	UG/L	ND	5	
TRANS 1,2 DICHLOROETHYLENE	UG/L	ND	5	
1,1,1-TRICHLOROETHANE	UG/L	ND	5	
1,1,2-TRICHLOROETHANE	UG/L	ND	5	
1,2,3 TRICHLOROBENZENE	UG/L	ND	5	
1,2,4 TRICHLOROBENZENE	UG/L	ND	5	
TRICHLOROETHENE	UG/L	ND	5	
TRICHLOROFLUOROMETHANE	UG/L	ND	5	
1,2,3 TRICHLOROPROPANE	UG/L	ND	5	
1,2,4-TRIMETHYLBENZENE	UG/L	ND	5	
1,3,5-TRIMETHYLBENZENE	UG/L	ND	5	
VINYL CHLORIDE	UG/L	ND	5	
M,P-XYLENE	UG/L	ND	5	
O-XYLENE	UG/L	ND	5	
DIBROMOFLUOROMETHANE	%REC/SURR	100	74-124	
TOLUENE-D8	%REC/SURR	101	61-128	
BROMOFLUOROBENZENE	%REC/SURR	102	65-138	
ANALYST	INITIALS	LL		

Comments:

"FINAL REPORT FORMAT - SINGLE"

Accession: 603254
Client: CSX TRANSPORTATION
Project Number: 4365B
Project Name: CSX GREENVILLE
Project Location: GREENVILLE, SC
Test: SW 846 8260 TABLE SIX
Analysis Method: 8260 / SW-846, 3rd Edition, September 1986 and Rev. 1, July 1992.
Extraction Method: N/A
Matrix: GROUNDWATER
QC Level: II

Lab Id: 007
Client Sample Id: MW-5
Sample Date/Time: 13-MAR-96 1720
Received Date: 14-MAR-96

Batch: MAW025
Blank: B
Dry Weight %: N/A
Extraction Date: N/A
Analysis Date: 22-MAR-96

Parameter:	Units:	Results:	Rpt Lmts:	Q:
BENZENE	UG/L	ND	5	
BROMOBENZENE	UG/L	ND	5	
BROMOCHLOROMETHANE	UG/L	ND	5	
BROMODICHLOROMETHANE	UG/L	ND	5	
BROMOFORM	UG/L	ND	5	
BROMOMETHANE	UG/L	ND	5	
CARBON TETRACHLORIDE	UG/L	ND	5	
CHLOROBENZENE	UG/L	ND	5	
CHLOROETHANE	UG/L	ND	5	
CHLOROFORM	UG/L	ND	5	
CHLOROMETHANE	UG/L	ND	5	
2-CHLOROTOLUENE	UG/L	ND	5	
4-CHLOROTOLUENE	UG/L	ND	5	
CIS 1,2 DICHLOROETHYLENE	UG/L	ND	5	
CHLORODIBROMOMETHANE	UG/L	ND	5	
DIBROMOMETHANE	UG/L	ND	5	
1,4-DICHLOROBENZENE	UG/L	ND	5	
1,3-DICHLOROBENZENE	UG/L	ND	5	
1,2-DICHLOROBENZENE	UG/L	ND	5	
DICHLORODIFLUOROMETHANE	UG/L	ND	5	
1,1-DICHLOROETHANE	UG/L	ND	5	
1,2-DICHLOROETHANE	UG/L	ND	5	
1,1-DICHLOROETHENE	UG/L	ND	5	
1,3 DICHLOROPROPANE	UG/L	ND	5	
2,2-DICHLOROPROPANE	UG/L	ND	5	
1,2-DICHLOROPROPANE	UG/L	ND	5	
CIS-1,3-DICHLOROPROPENE	UG/L	ND	5	
TRANS-1,3-DICHLOROPROPENE	UG/L	ND	5	
1,1 DICHLOROPROPENE	UG/L	ND	5	
ETHYL BENZENE	UG/L	ND	5	
HEXACHLOROBUTADIENE	UG/L	ND	5	
ISOPROPYL BENZENE	UG/L	ND	5	
P-ISOPROPYLTOLUENE	UG/L	ND	5	
METHYLENE CHLORIDE	UG/L	ND	5	
NAPHTHALENE	UG/L	9	5	
N-BUTYL BENZENE	UG/L	ND	5	
N-PROPYL BENZENE	UG/L	ND	5	
SEC-BUTYL BENZENE	UG/L	ND	5	
STYRENE	UG/L	ND	5	
TERT-BUTYL BENZENE	UG/L	ND	5	

"FINAL REPORT FORMAT - SINGLE"

Accession: 603254
Client: CSX TRANSPORTATION
Project Number: 4365B
Project Name: CSX GREENVILLE
Project Location: GREENVILLE, SC
Test: SW 846 8260 TABLE SIX
Analysis Method: 8260 / SW-846, 3rd Edition, September 1986 and Rev. 1, July 1992.
Extraction Method: N/A
Matrix: GROUNDWATER
QC Level: II

Lab Id: 007
Client Sample Id: MW-5
Sample Date/Time: 13-MAR-96 1720
Received Date: 14-MAR-96

Parameter:	Units:	Results:	Rpt Lmts:	Q:
1,1,1,2-TETRACHLOROETHANE	UG/L	ND	5	
1,1,2,2-TETRACHLOROETHANE	UG/L	ND	5	
TETRACHLOROETHENE	UG/L	ND	5	
TOLUENE	UG/L	ND	5	
TRANS 1,2 DICHLOROETHYLENE	UG/L	ND	5	
1,1,1-TRICHLOROETHANE	UG/L	ND	5	
1,1,2-TRICHLOROETHANE	UG/L	ND	5	
1,2,3 TRICHLOROBENZENE	UG/L	ND	5	
1,2,4 TRICHLOROBENZENE	UG/L	ND	5	
TRICHLOROETHENE	UG/L	ND	5	
TRICHLOROFLUOROMETHANE	UG/L	ND	5	
1,2,3 TRICHLOROPROPANE	UG/L	ND	5	
1,2,4-TRIMETHYLBENZENE	UG/L	ND	5	
1,3,5-TRIMETHYLBENZENE	UG/L	ND	5	
VINYL CHLORIDE	UG/L	ND	5	
M,P-XYLENE	UG/L	ND	5	
O-XYLENE	UG/L	ND	5	
DIBROMOFLUOROMETHANE	%REC/SURR	108	74-124	
TOLUENE-D8	%REC/SURR	100	61-128	
BROMOFLUOROBENZENE	%REC/SURR	103	65-138	
ANALYST	INITIALS	LL		

Comments:

"FINAL REPORT FORMAT - SINGLE"

Accession: 603254
Client: CSX TRANSPORTATION
Project Number: 4365B
Project Name: CSX GREENVILLE
Project Location: GREENVILLE, SC
Test: SW 846 8260 TABLE SIX
Analysis Method: 8260 / SW-846, 3rd Edition, September 1986 and Rev. 1, July 1992.
Extraction Method: N/A
Matrix: GROUNDWATER
QC Level: II

Lab Id: 008
Client Sample Id: MW-6
Sample Date/Time: 13-MAR-96 1615
Received Date: 14-MAR-96

Batch: MAW025
Blank: B
Dry Weight %: N/A
Extraction Date: N/A
Analysis Date: 22-MAR-96

Parameter:	Units:	Results:	Rpt Lmts:	Q:
BENZENE	UG/L	ND	5	
BROMOBENZENE	UG/L	ND	5	
BROMOCHLOROMETHANE	UG/L	ND	5	
BROMODICHLOROMETHANE	UG/L	ND	5	
BROMOFORM	UG/L	ND	5	
BROMOMETHANE	UG/L	ND	5	
CARBON TETRACHLORIDE	UG/L	ND	5	
CHLOROBENZENE	UG/L	ND	5	
CHLOROETHANE	UG/L	ND	5	
CHLOROFORM	UG/L	ND	5	
CHLOROMETHANE	UG/L	ND	5	
2-CHLOROTOLUENE	UG/L	ND	5	
4-CHLOROTOLUENE	UG/L	ND	5	
CIS 1,2 DICHLOROETHYLENE	UG/L	ND	5	
CHLORODIBROMOMETHANE	UG/L	ND	5	
DIBROMOMETHANE	UG/L	ND	5	
1,4-DICHLOROBENZENE	UG/L	ND	5	
1,3-DICHLOROBENZENE	UG/L	ND	5	
1,2-DICHLOROBENZENE	UG/L	ND	5	
DICHLORODIFLUOROMETHANE	UG/L	ND	5	
1,1-DICHLOROETHANE	UG/L	ND	5	
1,2-DICHLOROETHANE	UG/L	ND	5	
1,1-DICHLOROETHENE	UG/L	ND	5	
1,3 DICHLOROPROPANE	UG/L	ND	5	
2,2-DICHLOROPROPANE	UG/L	ND	5	
1,2-DICHLOROPROPANE	UG/L	ND	5	
CIS-1,3-DICHLOROPROPENE	UG/L	ND	5	
TRANS-1,3-DICHLOROPROPENE	UG/L	ND	5	
1,1 DICHLOROPROPENE	UG/L	ND	5	
ETHYL BENZENE	UG/L	ND	5	
HEXACHLOROBUTADIENE	UG/L	ND	5	
ISOPROPYL BENZENE	UG/L	ND	5	
P-ISOPROPYLTOLUENE	UG/L	ND	5	
METHYLENE CHLORIDE	UG/L	ND	5	
NAPHTHALENE	UG/L	390	50	
N-BUTYL BENZENE	UG/L	ND	5	
N-PROPYL BENZENE	UG/L	ND	5	
SEC-BUTYL BENZENE	UG/L	ND	5	
STYRENE	UG/L	ND	5	
TERT-BUTYL BENZENE	UG/L	ND	5	

"FINAL REPORT FORMAT - SINGLE"

Accession: 603254
Client: CSX TRANSPORTATION
Project Number: 4365B
Project Name: CSX GREENVILLE
Project Location: GREENVILLE, SC
Test: SW 846 8260 TABLE SIX
Analysis Method: 8260 / SW-846, 3rd Edition, September 1986 and Rev. 1, July 1992.
Extraction Method: N/A
Matrix: GROUNDWATER
QC Level: II

Lab Id: 008
Client Sample Id: MW-6

Sample Date/Time: 13-MAR-96 1615
Received Date: 14-MAR-96

Parameter:	Units:	Results:	Rpt Lmts:	Q:
1,1,1,2-TETRACHLOROETHANE	UG/L	ND	5	
1,1,2,2-TETRACHLOROETHANE	UG/L	ND	5	
TETRACHLOROETHENE	UG/L	ND	5	
TOLUENE	UG/L	7	5	
TRANS 1,2 DICHLOROETHYLENE	UG/L	ND	5	
1,1,1-TRICHLOROETHANE	UG/L	ND	5	
1,1,2-TRICHLOROETHANE	UG/L	ND	5	
1,2,3 TRICHLOROBENZENE	UG/L	ND	5	
1,2,4 TRICHLOROBENZENE	UG/L	ND	5	
TRICHLOROETHENE	UG/L	ND	5	
TRICHLOROFLUOROMETHANE	UG/L	ND	5	
1,2,3 TRICHLOROPROPANE	UG/L	ND	5	
1,2,4-TRIMETHYLBENZENE	UG/L	8	5	
1,3,5-TRIMETHYLBENZENE	UG/L	ND	5	
VINYL CHLORIDE	UG/L	ND	5	
M,P-XYLENE**	UG/L	10	5	
O-XYLENE	UG/L	ND	5	
DIBROMOFLUOROMETHANE	%REC/SURR	101	74-124	
TOLUENE-D8	%REC/SURR	104	61-128	
BROMOFLUOROBENZENE	%REC/SURR	99	65-138	
ANALYST	INITIALS	LL		

Comments:

"FINAL REPORT FORMAT - SINGLE"

Accession: 603254
Client: CSX TRANSPORTATION
Project Number: 4365B
Project Name: CSX GREENVILLE
Project Location: GREENVILLE, SC
Test: SW 846 8260 TABLE SIX
Analysis Method: 8260 / SW-846, 3rd Edition, September 1986 and Rev. 1, July 1992.
Extraction Method: N/A
Matrix: GROUNDWATER
QC Level: II

Lab Id: 009
Client Sample Id: MW-7
Sample Date/Time: 13-MAR-96 0815
Received Date: 14-MAR-96

Batch: MAW025
Blank: A
Dry Weight %: N/A
Extraction Date: N/A
Analysis Date: 22-MAR-96

Parameter:	Units:	Results:	Rpt Lmts:	Q:
BENZENE	UG/L	680	500	
BROMOBENZENE	UG/L	ND	500	
BROMOCHLOROMETHANE	UG/L	ND	500	
BROMODICHLOROMETHANE	UG/L	ND	500	
BROMOFORM	UG/L	ND	500	
BROMOMETHANE	UG/L	ND	500	
CARBON TETRACHLORIDE	UG/L	ND	500	
CHLOROBENZENE	UG/L	ND	500	
CHLOROETHANE	UG/L	ND	500	
CHLOROFORM	UG/L	ND	500	
CHLOROMETHANE	UG/L	ND	500	
2-CHLOROTOLUENE	UG/L	ND	500	
4-CHLOROTOLUENE	UG/L	ND	500	
CIS 1,2 DICHLOROETHYLENE	UG/L	ND	500	
CHLORODIBROMOMETHANE	UG/L	ND	500	
DIBROMOMETHANE	UG/L	ND	500	
1,4-DICHLOROBENZENE	UG/L	ND	500	
1,3-DICHLOROBENZENE	UG/L	ND	500	
1,2-DICHLOROBENZENE	UG/L	ND	500	
DICHLORODIFLUOROMETHANE	UG/L	ND	500	
1,1-DICHLOROETHANE	UG/L	ND	500	
1,2-DICHLOROETHANE	UG/L	ND	500	
1,1-DICHLOROETHENE	UG/L	ND	500	
1,3 DICHLOROPROPANE	UG/L	ND	500	
2,2-DICHLOROPROPANE	UG/L	ND	500	
1,2-DICHLOROPROPANE	UG/L	ND	500	
CIS-1,3-DICHLOROPROPENE	UG/L	ND	500	
TRANS-1,3-DICHLOROPROPENE	UG/L	ND	500	
1,1 DICHLOROPROPENE	UG/L	ND	500	
ETHYL BENZENE	UG/L	ND	500	
HEXACHLOROBUTADIENE	UG/L	ND	500	
ISOPROPYL BENZENE	UG/L	ND	500	
P-ISOPROPYLTOLUENE	UG/L	ND	500	
METHYLENE CHLORIDE	UG/L	ND	500	
NAPHTHALENE	UG/L	2400	500	
N-BUTYL BENZENE	UG/L	ND	500	
N-PROPYL BENZENE	UG/L	ND	500	
SEC-BUTYL BENZENE	UG/L	ND	500	
STYRENE	UG/L	ND	500	
TERT-BUTYL BENZENE	UG/L	ND	500	

ANALYTICAL TECHNOLOGIES, INC. 11 East Olive Road Pensacola, Florida 32514 (904) 474-1001

"FINAL REPORT FORMAT - SINGLE"

Accession: 603254
Client: CSX TRANSPORTATION
Project Number: 4365B
Project Name: CSX GREENVILLE
Project Location: GREENVILLE, SC
Test: SW 846 8260 TABLE SIX
Analysis Method: 8260 / SW-846, 3rd Edition, September 1986 and Rev. 1, July 1992.
Extraction Method: N/A
Matrix: GROUNDWATER
QC Level: II

Lab Id: 009
Client Sample Id: MW-7
Sample Date/Time: 13-MAR-96 0815
Received Date: 14-MAR-96

Parameter:	Units:	Results:	Rpt. Lmts:	Q:
1,1,1,2-TETRACHLOROETHANE	UG/L	ND	500	
1,1,2,2-TETRACHLOROETHANE	UG/L	ND	500	
TETRACHLOROETHENE	UG/L	ND	500	
TOLUENE	UG/L	ND	500	
TRANS 1,2 DICHLOROETHYLENE	UG/L	ND	500	
1,1,1-TRICHLOROETHANE	UG/L	ND	500	
1,1,2-TRICHLOROETHANE	UG/L	ND	500	
1,2,3 TRICHLOROBENZENE	UG/L	ND	500	
1,2,4 TRICHLOROBENZENE	UG/L	ND	500	
TRICHLOROETHENE	UG/L	ND	500	
TRICHLOROFLUOROMETHANE	UG/L	ND	500	
1,2,3 TRICHLOROPROPANE	UG/L	ND	500	
1,2,4-TRIMETHYLBENZENE	UG/L	ND	500	
1,3,5-TRIMETHYLBENZENE	UG/L	ND	500	
VINYL CHLORIDE	UG/L	ND	500	
M,P-XYLENE	UG/L	ND	500	
O-XYLENE	UG/L	ND	500	
DIBROMOFLUOROMETHANE	%REC/SURR	102	74-124	
TOLUENE-D8	%REC/SURR	102	61-128	
BROMOFLUOROBENZENE	%REC/SURR	96	65-138	
ANALYST	INITIALS	LL		

Comments:

"FINAL REPORT FORMAT - SINGLE"

Accession: 603254
Client: CSX TRANSPORTATION
Project Number: 4365B
Project Name: CSX GREENVILLE
Project Location: GREENVILLE, SC
Test: SW 846 8260 TABLE SIX
Analysis Method: 8260 / SW-846, 3rd Edition, September 1986 and Rev. 1, July 1992.
Extraction Method: 8260 / SW-846, 3rd Edition, September 1986 and Rev. 1, July 1992.
Matrix: SOIL
QC Level: II

Lab Id: 010
Client Sample Id: DP1A
Sample Date/Time: 12-MAR-96 0950
Received Date: 14-MAR-96

Batch: MAS026
Blank: A
Dry Weight %: 83
Extraction Date: 25-MAR-96
Analysis Date: 25-MAR-96

Parameter:	Units:	Results:	Rpt Lmts:	Q:
BENZENE	UG/KG	ND	1200	
BROMOBENZENE	UG/KG	ND	1200	
BROMOCHLOROMETHANE	UG/KG	ND	1200	
BROMODICHLOROMETHANE	UG/KG	ND	1200	
BROMOFORM	UG/KG	ND	1200	
BROMOMETHANE	UG/KG	ND	1200	
CARBON TETRACHLORIDE	UG/KG	ND	1200	
CHLOROBENZENE	UG/KG	ND	1200	
CHLOROETHANE	UG/KG	ND	1200	
CHLOROFORM	UG/KG	ND	1200	
CHLOROMETHANE	UG/KG	ND	1200	
2-CHLOROTOLUENE	UG/KG	ND	1200	
4-CHLOROTOLUENE	UG/KG	ND	1200	
CIS 1,2 DICHLOROETHYLENE	UG/KG	ND	1200	
CHLORODIBROMOMETHANE	UG/KG	ND	1200	
DIBROMOMETHANE	UG/KG	ND	1200	
1,4-DICHLOROBENZENE	UG/KG	ND	1200	
1,3-DICHLOROBENZENE	UG/KG	ND	1200	
1,2-DICHLOROBENZENE	UG/KG	ND	1200	
DICHLORODIFLUOROMETHANE	UG/KG	ND	1200	
1,1-DICHLOROETHANE	UG/KG	ND	1200	
1,2-DICHLOROETHANE	UG/KG	ND	1200	
1,1-DICHLOROETHENE	UG/KG	ND	1200	
1,3 DICHLOROPROPANE	UG/KG	ND	1200	
2,2-DICHLOROPROPANE	UG/KG	ND	1200	
1,2-DICHLOROPROPANE	UG/KG	ND	1200	
CIS-1,3-DICHLOROPROPENE	UG/KG	ND	1200	
TRANS-1,3-DICHLOROPROPENE	UG/KG	ND	1200	
1,1 DICHLOROPROPENE	UG/KG	ND	1200	
ETHYL BENZENE	UG/KG	ND	1200	
HEXACHLOROBUTADIENE	UG/KG	ND	1200	
ISOPROPYL BENZENE	UG/KG	ND	1200	
P-ISOPROPYLTOLUENE	UG/KG	ND	1200	
METHYLENE CHLORIDE	UG/KG	ND	1200	
NAPHTHALENE	UG/KG	79000	5000	
N-BUTYL BENZENE	UG/KG	ND	1200	
N-PROPYL BENZENE	UG/KG	ND	1200	
SEC-BUTYL BENZENE	UG/KG	ND	1200	
STYRENE	UG/KG	ND	1200	
TERT-BUTYL BENZENE	UG/KG	ND	1200	

"FINAL REPORT FORMAT - SINGLE"

Accession: 603254
Client: CSX TRANSPORTATION
Project Number: 4365B
Project Name: CSX GREENVILLE
Project Location: GREENVILLE, SC
Test: SW 846 8260 TABLE SIX
Analysis Method: 8260 / SW-846, 3rd Edition, September 1986 and Rev. 1, July 1992.
Extraction Method: 8260 / SW-846, 3rd Edition, September 1986 and Rev. 1, July 1992.
Matrix: SOIL
QC Level: II

Lab Id: 010
Client Sample Id: DP1A
Sample Date/Time: 12-MAR-96 0950
Received Date: 14-MAR-96

Parameter:	Units:	Results:	Rpt Lmts:	Q:
1,1,1,2-TETRACHLOROETHANE	UG/KG	ND	1200	
1,1,2,2-TETRACHLOROETHANE	UG/KG	ND	1200	
TETRACHLOROETHENE	UG/KG	ND	1200	
TOLUENE	UG/KG	ND	1200	
TRANS 1,2 DICHLOROETHYLENE	UG/KG	ND	1200	
1,1,1-TRICHLOROETHANE	UG/KG	ND	1200	
1,1,2-TRICHLOROETHANE	UG/KG	ND	1200	
1,2,3 TRICHLOROBENZENE	UG/KG	ND	1200	
1,2,4 TRICHLOROBENZENE	UG/KG	ND	1200	
TRICHLOROETHENE	UG/KG	ND	1200	
TRICHLOROFLUOROMETHANE	UG/KG	ND	1200	
1,2,3 TRICHLOROPROPANE	UG/KG	ND	1200	
1,2,4-TRIMETHYLBENZENE	UG/KG	ND	1200	
1,3,5-TRIMETHYLBENZENE	UG/KG	ND	1200	
VINYL CHLORIDE	UG/KG	ND	1200	
M,P-XYLENE	UG/KG	1300	1200	
O-XYLENE	UG/KG	ND	1200	
HEPTANE	UG/KG	ND	1200	
ISOPROPYL ACETATE	UG/KG	ND	4800	
METHYL CYCLOHEXANE	UG/KG	ND	2400	
PROPYL ACETATE	UG/KG	ND	4800	
DIBROMOFLUOROMETHANE	%REC/SURR	105	80-120	
TOLUENE-D8	%REC/SURR	110	81-117	
BROMOFLUOROBENZENE	%REC/SURR	102	74-121	
ANALYST	INITIALS	LL		

Comments:

"FINAL REPORT FORMAT - SINGLE"

Accession: 603254
Client: CSX TRANSPORTATION
Project Number: 4365B
Project Name: CSX GREENVILLE
Project Location: GREENVILLE, SC
Test: SW 846 8260 TABLE SIX
Analysis Method: 8260 / SW-846, 3rd Edition, September 1986 and Rev. 1, July 1992.
Extraction Method: N/A
Matrix: SOIL
QC Level: II

Lab Id: 011 Sample Date/Time: 13-MAR-96 0900
Client Sample Id: DP14 Received Date: 14-MAR-96

Batch: MAS025 Extraction Date: N/A
Blank: B Dry Weight %: 75 Analysis Date: 22-MAR-96

Parameter:	Units:	Results:	Rpt Lmts:	Q:
BENZENE	UG/KG	ND	7	
BROMOBENZENE	UG/KG	ND	7	
BROMOCHLOROMETHANE	UG/KG	ND	7	
BROMODICHLOROMETHANE	UG/KG	ND	7	
BROMOFORM	UG/KG	ND	7	
BROMOMETHANE	UG/KG	ND	7	
CARBON TETRACHLORIDE	UG/KG	ND	7	
CHLOROBENZENE	UG/KG	ND	7	
CHLOROETHANE	UG/KG	ND	7	
CHLOROFORM	UG/KG	ND	7	
CHLOROMETHANE	UG/KG	ND	7	
2-CHLOROTOLUENE	UG/KG	ND	7	
4-CHLOROTOLUENE	UG/KG	ND	7	
CIS 1,2 DICHLOROETHYLENE	UG/KG	ND	7	
CHLORODIBROMOMETHANE	UG/KG	ND	7	
DIBROMOMETHANE	UG/KG	ND	7	
1,4-DICHLOROBENZENE	UG/KG	ND	7	
1,3-DICHLOROBENZENE	UG/KG	ND	7	
1,2-DICHLOROBENZENE	UG/KG	ND	7	
DICHLORODIFLUOROMETHANE	UG/KG	ND	7	
1,1-DICHLOROETHANE	UG/KG	ND	7	
1,2-DICHLOROETHANE	UG/KG	ND	7	
1,1-DICHLOROETHENE	UG/KG	ND	7	
1,3 DICHLOROPROPANE	UG/KG	ND	7	
2,2-DICHLOROPROPANE	UG/KG	ND	7	
1,2-DICHLOROPROPANE	UG/KG	ND	7	
CIS-1,3-DICHLOROPROPENE	UG/KG	ND	7	
TRANS-1,3-DICHLOROPROPENE	UG/KG	ND	7	
1,1 DICHLOROPROPENE	UG/KG	ND	7	
ETHYL BENZENE	UG/KG	ND	7	
HEXACHLOROBUTADIENE	UG/KG	ND	7	
ISOPROPYL BENZENE	UG/KG	ND	7	
P-ISOPROPYLTOLUENE	UG/KG	ND	7	
METHYLENE CHLORIDE	UG/KG	ND	7	
NAPHTHALENE	UG/KG	ND	7	
N-BUTYL BENZENE	UG/KG	ND	7	
N-PROPYL BENZENE	UG/KG	ND	7	
SEC-BUTYL BENZENE	UG/KG	ND	7	
STYRENE	UG/KG	ND	7	
TERT-BUTYL BENZENE	UG/KG	ND	7	

"FINAL REPORT FORMAT - SINGLE"

Accession: 603254
Client: CSX TRANSPORTATION
Project Number: 4365B
Project Name: CSX GREENVILLE
Project Location: GREENVILLE, SC
Test: SW 846 8260 TABLE SIX
Analysis Method: 8260 / SW-846, 3rd Edition, September 1986 and Rev. 1, July 1992.
Extraction Method: N/A
Matrix: SOIL
QC Level: II

Lab Id: 011
Client Sample Id: DP14
Sample Date/Time: 13-MAR-96 0900
Received Date: 14-MAR-96

Parameter:	Units:	Results:	Rpt Lmts:	Q:
1,1,1,2-TETRACHLOROETHANE	UG/KG	ND	7	
1,1,2,2-TETRACHLOROETHANE	UG/KG	ND	7	
TETRACHLOROETHENE	UG/KG	ND	7	
TOLUENE	UG/KG	ND	7	
TRANS 1,2 DICHLOROETHYLENE	UG/KG	ND	7	
1,1,1-TRICHLOROETHANE	UG/KG	ND	7	
1,1,2-TRICHLOROETHANE	UG/KG	ND	7	
1,2,3 TRICHLOROBENZENE	UG/KG	ND	7	
1,2,4 TRICHLOROBENZENE	UG/KG	ND	7	
TRICHLOROETHENE	UG/KG	ND	7	
TRICHLOROFLUOROMETHANE	UG/KG	ND	7	
1,2,3 TRICHLOROPROPANE	UG/KG	ND	7	
1,2,4-TRIMETHYLBENZENE	UG/KG	ND	7	
1,3,5-TRIMETHYLBENZENE	UG/KG	ND	7	
VINYL CHLORIDE	UG/KG	ND	7	
M,P-XYLENE	UG/KG	ND	7	
O-XYLENE	UG/KG	ND	7	
HEPTANE	UG/KG	ND	7	
ISOPROPYL ACETATE	UG/KG	ND	27	
METHYL CYCLOHEXANE	UG/KG	ND	13	
PROPYL ACETATE	UG/KG	ND	27	
DIBROMOFLUOROMETHANE	%REC/SURR	100	80-120	
TOLUENE-D8	%REC/SURR	102	81-117	
BROMOFLUOROBENZENE	%REC/SURR	102	74-121	
ANALYST	INITIALS	LL		

Comments:

"FINAL REPORT FORMAT - SINGLE"

Accession: 603254
Client: CSX TRANSPORTATION
Project Number: 4365B
Project Name: CSX GREENVILLE
Project Location: GREENVILLE, SC
Test: SW 846 8260 TABLE SIX
Analysis Method: 8260 / SW-846, 3rd Edition, September 1986 and Rev. 1, July 1992.
Extraction Method: N/A
Matrix: SOIL
QC Level: II

Lab Id: 012
Client Sample Id: DP18
Sample Date/Time: 13-MAR-96 1020
Received Date: 14-MAR-96

Batch: MAS025
Blank: B
Dry Weight %: 83
Extraction Date: N/A
Analysis Date: 22-MAR-96

Parameter:	Units:	Results:	Rpt Lmts:	Q:
BENZENE	UG/KG	ND	6	
BROMOBENZENE	UG/KG	ND	6	
BROMOCHLOROMETHANE	UG/KG	ND	6	
BROMODICHLOROMETHANE	UG/KG	ND	6	
BROMOFORM	UG/KG	ND	6	
BROMOMETHANE	UG/KG	ND	6	
CARBON TETRACHLORIDE	UG/KG	ND	6	
CHLOROBENZENE	UG/KG	ND	6	
CHLOROETHANE	UG/KG	ND	6	
CHLOROFORM	UG/KG	ND	6	
CHLOROMETHANE	UG/KG	ND	6	
2-CHLOROTOLUENE	UG/KG	ND	6	
4-CHLOROTOLUENE	UG/KG	ND	6	
CIS 1,2 DICHLOROETHYLENE	UG/KG	ND	6	
CHLORODIBROMOMETHANE	UG/KG	ND	6	
DIBROMOMETHANE	UG/KG	ND	6	
1,4-DICHLOROBENZENE	UG/KG	ND	6	
1,3-DICHLOROBENZENE	UG/KG	ND	6	
1,2-DICHLOROBENZENE	UG/KG	ND	6	
DICHLORODIFLUOROMETHANE	UG/KG	ND	6	
1,1-DICHLOROETHANE	UG/KG	ND	6	
1,2-DICHLOROETHANE	UG/KG	ND	6	
1,1-DICHLOROETHENE	UG/KG	ND	6	
1,3 DICHLOROPROPANE	UG/KG	ND	6	
2,2-DICHLOROPROPANE	UG/KG	ND	6	
1,2-DICHLOROPROPANE	UG/KG	ND	6	
CIS-1,3-DICHLOROPROPENE	UG/KG	ND	6	
TRANS-1,3-DICHLOROPROPENE	UG/KG	ND	6	
1,1 DICHLOROPROPENE	UG/KG	ND	6	
ETHYL BENZENE	UG/KG	ND	6	
HEXACHLOROBUTADIENE	UG/KG	ND	6	
ISOPROPYL BENZENE	UG/KG	ND	6	
P-ISOPROPYLTOLUENE	UG/KG	ND	6	
METHYLENE CHLORIDE	UG/KG	ND	6	
NAPHTHALENE	UG/KG	ND	6	
N-BUTYL BENZENE	UG/KG	ND	6	
N-PROPYL BENZENE	UG/KG	ND	6	
SEC-BUTYL BENZENE	UG/KG	ND	6	
STYRENE	UG/KG	ND	6	
TERT-BUTYL BENZENE	UG/KG	ND	6	

"FINAL REPORT FORMAT - SINGLE"

Accession: 603254
Client: CSX TRANSPORTATION
Project Number: 4365B
Project Name: CSX GREENVILLE
Project Location: GREENVILLE, SC
Test: SW 846 8260 TABLE SIX
Analysis Method: 8260 / SW-846, 3rd Edition, September 1986 and Rev. 1, July 1992.
Extraction Method: N/A
Matrix: SOIL
QC Level: II

Lab Id: 012
Client Sample Id: DP18

Sample Date/Time: 13-MAR-96 1020
Received Date: 14-MAR-96

Parameter:	Units:	Results:	Rpt Lmts:	Q:
1,1,1,2-TETRACHLOROETHANE	UG/KG	ND	6	
1,1,2,2-TETRACHLOROETHANE	UG/KG	ND	6	
TETRACHLOROETHENE	UG/KG	ND	6	
TOLUENE	UG/KG	ND	6	
TRANS 1,2 DICHLOROETHYLENE	UG/KG	ND	6	
1,1,1-TRICHLOROETHANE	UG/KG	ND	6	
1,1,2-TRICHLOROETHANE	UG/KG	ND	6	
1,2,3 TRICHLOROBENZENE	UG/KG	ND	6	
1,2,4 TRICHLOROBENZENE	UG/KG	ND	6	
TRICHLOROETHENE	UG/KG	ND	6	
TRICHLOROFLUOROMETHANE	UG/KG	ND	6	
1,2,3 TRICHLOROPROPANE	UG/KG	ND	6	
1,2,4-TRIMETHYLBENZENE	UG/KG	ND	6	
1,3,5-TRIMETHYLBENZENE	UG/KG	ND	6	
VINYL CHLORIDE	UG/KG	ND	6	
M,P-XYLENE	UG/KG	ND	6	
O-XYLENE	UG/KG	ND	6	
HEPTANE	UG/KG	ND	6	
ISOPROPYL ACETATE	UG/KG	ND	24	
METHYL CYCLOHEXANE	UG/KG	ND	12	
PROPYL ACETATE	UG/KG	ND	24	
DIBROMOFLUOROMETHANE	%REC/SURR	100	80-120	
TOLUENE-D8	%REC/SURR	101	81-117	
BROMOFLUOROBENZENE	%REC/SURR	109	74-121	
ANALYST	INITIALS	LL		

Comments:

"FINAL REPORT FORMAT - SINGLE"

Accession: 603254
Client: CSX TRANSPORTATION
Project Number: 4365B
Project Name: CSX GREENVILLE
Project Location: GREENVILLE, SC
Test: SW 846 8260 TABLE SIX
Analysis Method: 8260 / SW-846, 3rd Edition, September 1986 and Rev. 1, July 1992.
Extraction Method: N/A
Matrix: SOIL
QC Level: II

Lab Id: 013
Client Sample Id: NB1
Sample Date/Time: 13-MAR-96 1305
Received Date: 14-MAR-96

Batch: MAS025
Blank: B
Dry Weight %: 85
Extraction Date: N/A
Analysis Date: 22-MAR-96

Parameter:	Units:	Results:	Rpt Lmts:	Q:
BENZENE	UG/KG	ND	6	
BROMOBENZENE	UG/KG	ND	6	
BROMOCHLOROMETHANE	UG/KG	ND	6	
BROMODICHLOROMETHANE	UG/KG	ND	6	
BROMOFORM	UG/KG	ND	6	
BROMOMETHANE	UG/KG	ND	6	
CARBON TETRACHLORIDE	UG/KG	ND	6	
CHLOROBENZENE	UG/KG	ND	6	
CHLOROETHANE	UG/KG	ND	6	
CHLOROFORM	UG/KG	ND	6	
CHLOROMETHANE	UG/KG	ND	6	
2-CHLOROTOLUENE	UG/KG	ND	6	
4-CHLOROTOLUENE	UG/KG	ND	6	
CIS 1,2 DICHLOROETHYLENE	UG/KG	ND	6	
CHLORODIBROMOMETHANE	UG/KG	ND	6	
DIBROMOMETHANE	UG/KG	ND	6	
1,4-DICHLOROBENZENE	UG/KG	ND	6	
1,3-DICHLOROBENZENE	UG/KG	ND	6	
1,2-DICHLOROBENZENE	UG/KG	ND	6	
DICHLORODIFLUOROMETHANE	UG/KG	ND	6	
1,1-DICHLOROETHANE	UG/KG	ND	6	
1,2-DICHLOROETHANE	UG/KG	ND	6	
1,1-DICHLOROETHENE	UG/KG	ND	6	
1,3 DICHLOROPROPANE	UG/KG	ND	6	
2,2-DICHLOROPROPANE	UG/KG	ND	6	
1,2-DICHLOROPROPANE	UG/KG	ND	6	
CIS-1,3-DICHLOROPROPENE	UG/KG	ND	6	
TRANS-1,3-DICHLOROPROPENE	UG/KG	ND	6	
1,1 DICHLOROPROPENE	UG/KG	ND	6	
ETHYL BENZENE	UG/KG	ND	6	
HEXACHLOROBUTADIENE	UG/KG	ND	6	
ISOPROPYL BENZENE	UG/KG	ND	6	
P-ISOPROPYLTOLUENE	UG/KG	ND	6	
METHYLENE CHLORIDE	UG/KG	ND	6	
NAPHTHALENE	UG/KG	ND	6	
N-BUTYL BENZENE	UG/KG	ND	6	
N-PROPYL BENZENE	UG/KG	ND	6	
SEC-BUTYL BENZENE	UG/KG	ND	6	
STYRENE	UG/KG	ND	6	
TERT-BUTYL BENZENE	UG/KG	ND	6	

ANALYTICAL TECHNOLOGIES, INC. 11 East Olive Road Pensacola, Florida 32514 (904) 474-1001

"FINAL REPORT FORMAT - SINGLE"

Accession: 603254
Client: CSX TRANSPORTATION
Project Number: 4365B
Project Name: CSX GREENVILLE
Project Location: GREENVILLE, SC
Test: SW 846 8260 TABLE SIX
Analysis Method: 8260 / SW-846, 3rd Edition, September 1986 and Rev. 1, July 1992.
Extraction Method: N/A
Matrix: SOIL
QC Level: II

Lab Id: 013
Client Sample Id: NB1
Sample Date/Time: 13-MAR-96 1305
Received Date: 14-MAR-96

Parameter:	Units:	Results:	Rpt Lmts:	Q:
1,1,1,2-TETRACHLOROETHANE	UG/KG	ND	6	
1,1,2,2-TETRACHLOROETHANE	UG/KG	ND	6	
TETRACHLOROETHENE	UG/KG	ND	6	
TOLUENE	UG/KG	ND	6	
TRANS 1,2 DICHLOROETHYLENE	UG/KG	ND	6	
1,1,1-TRICHLOROETHANE	UG/KG	ND	6	
1,1,2-TRICHLOROETHANE	UG/KG	ND	6	
1,2,3 TRICHLOROBENZENE	UG/KG	ND	6	
1,2,4 TRICHLOROBENZENE	UG/KG	ND	6	
TRICHLOROETHENE	UG/KG	ND	6	
TRICHLOROFLUOROMETHANE	UG/KG	ND	6	
1,2,3 TRICHLOROPROPANE	UG/KG	ND	6	
1,2,4-TRIMETHYLBENZENE	UG/KG	ND	6	
1,3,5-TRIMETHYLBENZENE	UG/KG	ND	6	
VINYL CHLORIDE	UG/KG	ND	6	
M,P-XYLENE	UG/KG	ND	6	
O-XYLENE	UG/KG	ND	6	
HEPTANE	UG/KG	ND	6	
ISOPROPYL ACETATE	UG/KG	ND	24	
METHYL CYCLOHEXANE	UG/KG	ND	12	
PROPYL ACETATE	UG/KG	ND	24	
DIBROMOFLUOROMETHANE	%REC/SURR	103	80-120	
TOLUENE-D8	%REC/SURR	100	81-117	
BROMOFLUOROBENZENE	%REC/SURR	106	74-121	
ANALYST	INITIALS	LL		

Comments:

ANALYTICAL TECHNOLOGIES, INC. 11 East Olive Road Pensacola, Florida 32514 (904) 474-1001

Analysis Report

Analysis: BN EXTRACTABLES (8270)

Accession:	603254
Client:	CSX TRANSPORTATION
Project Number:	4365B
Project Name:	CSX GREENVILLE
Project Location:	GREENVILLE, SC
Department:	ORGANIC/MS

ANALYTICAL TECHNOLOGIES, INC. 11 East Olive Road Pensacola, Florida 32514 (904) 474-1001

"FINAL REPORT FORMAT - SINGLE"

Accession: 603254
Client: CSX TRANSPORTATION
Project Number: 4365B
Project Name: CSX GREENVILLE
Project Location: GREENVILLE, SC
Test: BN EXTRACTABLES (8270)
Analysis Method: 8270 / SW-846, 3rd Edition, September 1986 and Rev. 1, July 1992.
Extraction Method: 3520 / SW-846, 3rd Edition, September 1986 and Rev. 1, July, 1992.
Matrix: GROUNDWATER
QC Level: II

Lab Id: 001
Client Sample Id: MW-1
Sample Date/Time: 13-MAR-96 1520
Received Date: 14-MAR-96

Batch: ALW023
Blank: A
Dry Weight %: N/A
Extraction Date: 18-MAR-96
Analysis Date: 02-APR-96

Parameter:	Units:	Results:	Rpt Lmts:	Q:
ACENAPHTHENE	UG/L	700	200	
ACENAPHTHYLENE	UG/L	ND	200	
ACETOPHENONE	UG/L	ND	200	
4-AMINOBIPHENYL	UG/L	ND	200	
ANILINE	UG/L	ND	200	
ANTHRACENE	UG/L	ND	200	
BENZIDINE	UG/L	ND	200	
BENZO(a)ANTHRACENE	UG/L	ND	200	
BENZO(a)PYRENE	UG/L	ND	200	
BENZO(b)FLUORANTHENE	UG/L	ND	200	
BENZO(g,h,i)PERYLENE	UG/L	ND	200	
BENZO(k)FLUORANTHENE	UG/L	ND	200	
BENZYL ALCOHOL	UG/L	ND	200	
BIS(2-CHLOROETHYL)ETHER	UG/L	ND	200	
BIS(2-CHLOROETHOXY)METHANE	UG/L	ND	200	
BIS(2-CHLOROISOPROPYL)ETHER	UG/L	ND	200	
BIS(2-ETHYLHEXYL)PHTHALATE	UG/L	ND	200	
4-BROMOPHENYL-PHENYLETHER	UG/L	ND	200	
BUTYLBENZYLPHTHALATE	UG/L	ND	200	
4-CHLOROANILINE	UG/L	ND	200	
1-CHLORONAPHTHALENE	UG/L	ND	200	
2-CHLORONAPHTHALENE	UG/L	ND	200	
4-CHLOROPHENYL-PHENYLETHER	UG/L	ND	200	
CHRYSENE	UG/L	ND	200	
DIBENZO(A,H)ANTHRACENE	UG/L	ND	200	
DIBENZ(A,J)ACRIDINE	UG/L	ND	200	
DIBENZOFURAN	UG/L	ND	200	
1,2-DICHLOROBENZENE	UG/L	ND	200	
1,3-DICHLOROBENZENE	UG/L	ND	200	
1,4-DICHLOROBENZENE	UG/L	ND	200	
3,3'-DICHLOROBENZIDINE	UG/L	ND	1000	
DIETHYLPHTHALATE	UG/L	ND	200	
P-DIMETHYLAMINOAZOBENZENE	UG/L	ND	200	
7,12-DIMETHYLBENZO(a)ANTHRACENE	UG/L	ND	200	
A-,A-DIMETHYLPHENETHYLAMINE	UG/L	ND	200	
DIMETHYLPHTHALATE	UG/L	ND	200	
DI-N-BUTYLPHTHALATE	UG/L	ND	200	
2,4-DINITROTOLUENE	UG/L	ND	200	
2,6-DINITROTOLUENE	UG/L	ND	200	
DI-N-OCTYLPHTHALATE	UG/L	ND	200	

"FINAL REPORT FORMAT - SINGLE"

Accession: 603254
Client: CSX TRANSPORTATION
Project Number: 4365B
Project Name: CSX GREENVILLE
Project Location: GREENVILLE, SC
Test: BN EXTRACTABLES (8270)
Analysis Method: 8270 / SW-846, 3rd Edition, September 1986 and Rev. 1, July 1992.
Extraction Method: 3520 / SW-846, 3rd Edition, September 1986 and Rev. 1, July, 1992.
Matrix: GROUNDWATER
QC Level: II

Lab Id: 001
Client Sample Id: MW-1
Sample Date/Time: 13-MAR-96 1520
Received Date: 14-MAR-96

Parameter:	Units:	Results:	Rpt Lmts:	Q:
DIPHENYLAMINE	UG/L	ND	200	
1,2-DIPHENYLHYDRAZINE	UG/L	ND	200	
FLUORANTHENE	UG/L	ND	200	
FLUORENE	UG/L	270	200	
HEXACHLOROBENZENE	UG/L	ND	200	
HEXACHLOROBUTADIENE	UG/L	ND	200	
HEXACHLOROCYCLOPENTADIENE	UG/L	ND	200	
HEXACHLOROETHANE	UG/L	ND	200	
INDENO(1,2,3-cd)PYRENE	UG/L	ND	200	
ISOPHORONE	UG/L	ND	200	
3-METHYLCHOLANTHRENE	UG/L	ND	200	
2-METHYLNAPHTHALENE	UG/L	1800	200	
NAPHTHALENE	UG/L	4600	200	
1-NAPHTHYLAMINE	UG/L	ND	200	
2-NAPHTHYLAMINE	UG/L	ND	200	
2-NITROANILINE	UG/L	ND	200	
3-NITROANILINE	UG/L	ND	200	
4-NITROANILINE	UG/L	ND	200	
NITROBENZENE	UG/L	ND	200	
N-NITROSODIMETHYLAMINE	UG/L	ND	200	
N-NITROSODI-N-BUTYLAMINE	UG/L	ND	200	
N-NITROSODIPHENYLAMINE	UG/L	ND	200	
N-NITROSO-DI-N-PROPYLAMINE	UG/L	ND	200	
N-NITROSOPIPERIDINE	UG/L	ND	200	
PENTACHLOROBENZENE	UG/L	ND	200	
PENTACHLORONITROBENZENE (PCNB)	UG/L	ND	200	
PHENACETIN	UG/L	ND	200	
PHENANTHRENE	UG/L	240	200	
2-PICOLINE	UG/L	ND	200	
PRONAMIDE	UG/L	ND	200	
PYRENE	UG/L	ND	200	
1,2,4,5-TETRACHLOROBENZENE	UG/L	ND	200	
1,2,4 TRICHLOROBENZENE	UG/L	ND	200	
2-FLUOROBIPHENYL	%REC/SURR	111	43-116	
NITROBENZENE-D5	%REC/SURR	49	35-114	
TERPHENYL-D14	%REC/SURR	108	33-124	
ANALYST	INITIALS	PL		

Comments:

"FINAL REPORT FORMAT - SINGLE"

Accession: 603254
Client: CSX TRANSPORTATION
Project Number: 4365B
Project Name: CSX GREENVILLE
Project Location: GREENVILLE, SC
Test: BN EXTRACTABLES (8270)
Analysis Method: 8270 / SW-846, 3rd Edition, September 1986 and Rev. 1, July 1992.
Extraction Method: 3520 / SW-846, 3rd Edition, September 1986 and Rev. 1, July, 1992.
Matrix: GROUNDWATER
QC Level: II

Lab Id: 002
Client Sample Id: MW-2
Sample Date/Time: 13-MAR-96 1700
Received Date: 14-MAR-96

Batch: ALW023
Blank: A
Dry Weight %: N/A
Extraction Date: 18-MAR-96
Analysis Date: 28-MAR-96

Parameter:	Units:	Results:	Rpt Lmts:	Q:
ACENAPHTHENE	UG/L	ND	10	
ACENAPHTHYLENE	UG/L	ND	10	
ACETOPHENONE	UG/L	ND	10	
4-AMINOBIPHENYL	UG/L	ND	10	
ANILINE	UG/L	ND	10	
ANTHRACENE	UG/L	ND	10	
BENZIDINE	UG/L	ND	10	
BENZO(a)ANTHRACENE	UG/L	ND	10	
BENZO(a)PYRENE	UG/L	ND	10	
BENZO(b)FLUORANTHENE	UG/L	ND	10	
BENZO(g,h,i)PERYLENE	UG/L	ND	10	
BENZO(k)FLUORANTHENE	UG/L	ND	10	
BENZYL ALCOHOL	UG/L	ND	10	
BIS(2-CHLOROETHYL)ETHER	UG/L	ND	10	
BIS(2-CHLOROETHOXY)METHANE	UG/L	ND	10	
BIS(2-CHLOROISOPROPYL)ETHER	UG/L	ND	10	
BIS(2-ETHYLHEXYL)PHTHALATE	UG/L	ND	10	
4-BROMOPHENYL-PHENYLETHER	UG/L	ND	10	
BUTYLBENZYLPHTHALATE	UG/L	ND	10	
4-CHLOROANILINE	UG/L	ND	10	
1-CHLORONAPHTHALENE	UG/L	ND	10	
2-CHLORONAPHTHALENE	UG/L	ND	10	
4-CHLOROPHENYL-PHENYLETHER	UG/L	ND	10	
CHRYSENE	UG/L	ND	10	
DIBENZO(A,H)ANTHRACENE	UG/L	ND	10	
DIBENZ(A,J)ACRIDINE	UG/L	ND	10	
DIBENZOFURAN	UG/L	ND	10	
1,2-DICHLOROBENZENE	UG/L	ND	10	
1,3-DICHLOROBENZENE	UG/L	ND	10	
1,4-DICHLOROBENZENE	UG/L	ND	10	
3,3'-DICHLOROBENZIDINE	UG/L	ND	50	
DIETHYLPHTHALATE	UG/L	ND	10	
P-DIMETHYLAMINOAZOBENZENE	UG/L	ND	10	
7,12-DIMETHYLBENZO(a)ANTHRACENE	UG/L	ND	10	
A-,A-DIMETHYLPHENETHYLAMINE	UG/L	ND	10	
DIMETHYLPHTHALATE	UG/L	ND	10	
DI-N-BUTYLPHTHALATE	UG/L	ND	10	
2,4-DINITROTOLUENE	UG/L	ND	10	
2,6-DINITROTOLUENE	UG/L	ND	10	
DI-N-OCTYLPHTHALATE	UG/L	ND	10	

"FINAL REPORT FORMAT - SINGLE"

Accession: 603254
Client: CSX TRANSPORTATION
Project Number: 4365B
Project Name: CSX GREENVILLE
Project Location: GREENVILLE, SC
Test: BN EXTRACTABLES (8270)
Analysis Method: 8270 / SW-846, 3rd Edition, September 1986 and Rev. 1, July 1992.
Extraction Method: 3520 / SW-846, 3rd Edition, September 1986 and Rev. 1, July, 1992.
Matrix: GROUNDWATER
QC Level: II

Lab Id: 002
Client Sample Id: MW-2
Sample Date/Time: 13-MAR-96 1700
Received Date: 14-MAR-96

Parameter:	Units:	Results:	Rpt Lmts:	Q:
DIPHENYLAMINE	UG/L	ND	10	
1,2-DIPHENYLHYDRAZINE	UG/L	ND	10	
FLUORANTHENE	UG/L	ND	10	
FLUORENE	UG/L	ND	10	
HEXACHLOROBENZENE	UG/L	ND	10	
HEXACHLOROBUTADIENE	UG/L	ND	10	
HEXACHLOROCYCLOPENTADIENE	UG/L	ND	10	
HEXACHLOROETHANE	UG/L	ND	10	
INDENO(1,2,3-cd)PYRENE	UG/L	ND	10	
ISOPHORONE	UG/L	ND	10	
3-METHYLCHOLANTHRENE	UG/L	ND	10	
2-METHYLNAPHTHALENE	UG/L	ND	10	
NAPHTHALENE	UG/L	ND	10	
1-NAPHTHYLAMINE	UG/L	ND	10	
2-NAPHTHYLAMINE	UG/L	ND	10	
2-NITROANILINE	UG/L	ND	10	
3-NITROANILINE	UG/L	ND	10	
4-NITROANILINE	UG/L	ND	10	
NITROBENZENE	UG/L	ND	10	
N-NITROSODIMETHYLAMINE	UG/L	ND	10	
N-NITROSODI-N-BUTYLAMINE	UG/L	ND	10	
N-NITROSODIPHENYLAMINE	UG/L	ND	10	
N-NITROSO-DI-N-PROPYLAMINE	UG/L	ND	10	
N-NITROSOPIPERIDINE	UG/L	ND	10	
PENTACHLOROBENZENE	UG/L	ND	10	
PENTACHLORONITROBENZENE (PCNB)	UG/L	ND	10	
PHENACETIN	UG/L	ND	10	
PHENANTHRENE	UG/L	ND	10	
2-PICOLINE	UG/L	ND	10	
PRONAMIDE	UG/L	ND	10	
PYRENE	UG/L	ND	10	
1,2,4,5-TETRACHLOROBENZENE	UG/L	ND	10	
1,2,4 TRICHLOROBENZENE	UG/L	ND	10	
2-FLUOROBIPHENYL	%REC/SURR	79	43-116	
NITROBENZENE-D5	%REC/SURR	79	35-114	
TERPHENYL-D14	%REC/SURR	94	33-124	
ANALYST	INITIALS	PL		

Comments:

"FINAL REPORT FORMAT - SINGLE"

Accession: 603254
Client: CSX TRANSPORTATION
Project Number: 4365B
Project Name: CSX GREENVILLE
Project Location: GREENVILLE, SC
Test: BN EXTRACTABLES (8270)
Analysis Method: 8270 / SW-846, 3rd Edition, September 1986 and Rev. 1, July 1992.
Extraction Method: 3520 / SW-846, 3rd Edition, September 1986 and Rev. 1, July, 1992.
Matrix: GROUNDWATER
QC Level: II

Lab Id: 004
Client Sample Id: MW-3
Sample Date/Time: 13-MAR-96 1425
Received Date: 14-MAR-96

Batch: ALW023
Blank: A
Dry Weight %: N/A
Extraction Date: 18-MAR-96
Analysis Date: 28-MAR-96

Parameter:	Units:	Results:	Rpt Lmts:	Q:
ACENAPHTHENE	UG/L	120	100	
ACENAPHTHYLENE	UG/L	570	100	
ACETOPHENONE	UG/L	ND	100	
4-AMINOBIPHENYL	UG/L	ND	100	
ANILINE	UG/L	ND	100	
ANTHRACENE	UG/L	ND	100	
BENZIDINE	UG/L	ND	100	
BENZO(a)ANTHRACENE	UG/L	ND	100	
BENZO(a)PYRENE	UG/L	ND	100	
BENZO(b)FLUORANTHENE	UG/L	ND	100	
BENZO(g,h,i)PERYLENE	UG/L	ND	100	
BENZO(k)FLUORANTHENE	UG/L	ND	100	
BENZYL ALCOHOL	UG/L	ND	100	
BIS(2-CHLOROETHYL)ETHER	UG/L	ND	100	
BIS(2-CHLOROETHOXY)METHANE	UG/L	ND	100	
BIS(2-CHLOROISOPROPYL)ETHER	UG/L	ND	100	
BIS(2-ETHYLHEXYL)PHTHALATE	UG/L	ND	100	
4-BROMOPHENYL-PHENYLETHER	UG/L	ND	100	
BUTYLBENZYLPHTHALATE	UG/L	ND	100	
4-CHLOROANILINE	UG/L	ND	100	
1-CHLORONAPHTHALENE	UG/L	ND	100	
2-CHLORONAPHTHALENE	UG/L	ND	100	
4-CHLOROPHENYL-PHENYLETHER	UG/L	ND	100	
CHRYSENE	UG/L	ND	100	
DIBENZO(A,H)ANTHRACENE	UG/L	ND	100	
DIBENZ(A,J)ACRIDINE	UG/L	ND	100	
DIBENZOFURAN	UG/L	ND	100	
1,2-DICHLOROBENZENE	UG/L	ND	100	
1,3-DICHLOROBENZENE	UG/L	ND	100	
1,4-DICHLOROBENZENE	UG/L	ND	100	
3,3'-DICHLOROBENZIDINE	UG/L	ND	500	
DIETHYLPHTHALATE	UG/L	ND	100	
P-DIMETHYLAMINOAZOBENZENE	UG/L	ND	100	
7,12-DIMETHYLBENZO(a)ANTHRACENE	UG/L	ND	100	
A-,A-DIMETHYLPHENETHYLAMINE	UG/L	ND	100	
DIMETHYLPHTHALATE	UG/L	ND	100	
DI-N-BUTYLPHTHALATE	UG/L	ND	100	
2,4-DINITROTOLUENE	UG/L	ND	100	
2,6-DINITROTOLUENE	UG/L	ND	100	
DI-N-OCTYLPHTHALATE	UG/L	ND	100	

"FINAL REPORT FORMAT - SINGLE"

Accession: 603254
Client: CSX TRANSPORTATION
Project Number: 4365B
Project Name: CSX GREENVILLE
Project Location: GREENVILLE, SC
Test: BN EXTRACTABLES (8270)
Analysis Method: 8270 / SW-846, 3rd Edition, September 1986 and Rev. 1, July 1992.
Extraction Method: 3520 / SW-846, 3rd Edition, September 1986 and Rev. 1, July, 1992.
Matrix: GROUNDWATER
QC Level: II

Lab Id: 004
Client Sample Id: MW-3
Sample Date/Time: 13-MAR-96 1425
Received Date: 14-MAR-96

Parameter:	Units:	Results:	Rpt Lmts:	Q:
DIPHENYLAMINE	UG/L	ND	100	
1,2-DIPHENYLHYDRAZINE	UG/L	ND	100	
FLUORANTHENE	UG/L	ND	100	
FLUORENE	UG/L	180	100	
HEXACHLOROBENZENE	UG/L	ND	100	
HEXACHLOROBUTADIENE	UG/L	ND	100	
HEXACHLOROCYCLOPENTADIENE	UG/L	ND	100	
HEXACHLOROETHANE	UG/L	ND	100	
INDENO(1,2,3-cd)PYRENE	UG/L	ND	100	
ISOPHORONE	UG/L	ND	100	
3-METHYLCHOLANTHRENE	UG/L	ND	100	
2-METHYLNAPHTHALENE	UG/L	820	100	
NAPHTHALENE	UG/L	3000	100	
1-NAPHTHYLAMINE	UG/L	ND	100	
2-NAPHTHYLAMINE	UG/L	ND	100	
2-NITROANILINE	UG/L	ND	100	
3-NITROANILINE	UG/L	ND	100	
4-NITROANILINE	UG/L	ND	100	
NITROBENZENE	UG/L	ND	100	
N-NITROSODIMETHYLAMINE	UG/L	ND	100	
N-NITROSODI-N-BUTYLAMINE	UG/L	ND	100	
N-NITROSODIPHENYLAMINE	UG/L	ND	100	
N-NITROSO-DI-N-PROPYLAMINE	UG/L	ND	100	
N-NITROSOPIPERIDINE	UG/L	ND	100	
PENTACHLOROBENZENE	UG/L	ND	100	
PENTACHLORONITROBENZENE (PCNB)	UG/L	ND	100	
PHENACETIN	UG/L	ND	100	
PHENANTHRENE	UG/L	230	100	
2-PICOLINE	UG/L	ND	100	
PRONAMIDE	UG/L	ND	100	
PYRENE	UG/L	ND	100	
1,2,4,5-TETRACHLOROBENZENE	UG/L	ND	100	
1,2,4 TRICHLOROBENZENE	UG/L	ND	100	
2-FLUOROBIPHENYL	%REC/SURR	109	43-116	
NITROBENZENE-D5	%REC/SURR	58	35-114	
TERPHENYL-D14	%REC/SURR	105	33-124	
ANALYST	INITIALS	PL		

Comments:

"FINAL REPORT FORMAT - SINGLE"

Accession: 603254
Client: CSX TRANSPORTATION
Project Number: 4365B
Project Name: CSX GREENVILLE
Project Location: GREENVILLE, SC
Test: BN EXTRACTABLES (8270)
Analysis Method: 8270 / SW-846, 3rd Edition, September 1986 and Rev. 1, July 1992.
Extraction Method: 3520 / SW-846, 3rd Edition, September 1986 and Rev. 1, July, 1992.
Matrix: GROUNDWATER
QC Level: II

Lab Id: 005 Sample Date/Time: 13-MAR-96 1450
Client Sample Id: MW-3D Received Date: 14-MAR-96

Batch: ALW023 Extraction Date: 18-MAR-96
Blank: A Dry Weight %: N/A Analysis Date: 02-APR-96

Parameter:	Units:	Results:	Rpt Lmts:	Q:
ACENAPHTHENE	UG/L	ND	400	
ACENAPHTHYLENE	UG/L	ND	400	
ACETOPHENONE	UG/L	ND	400	
4-AMINOBIPHENYL	UG/L	ND	400	
ANILINE	UG/L	ND	400	
ANTHRACENE	UG/L	ND	400	
BENZIDINE	UG/L	ND	400	
BENZO(a)ANTHRACENE	UG/L	ND	400	
BENZO(a)PYRENE	UG/L	ND	400	
BENZO(b)FLUORANTHENE	UG/L	ND	400	
BENZO(g,h,i)PERYLENE	UG/L	ND	400	
BENZO(k)FLUORANTHENE	UG/L	ND	400	
BENZYL ALCOHOL	UG/L	ND	400	
BIS(2-CHLOROETHYL)ETHER	UG/L	ND	400	
BIS(2-CHLOROETHOXY)METHANE	UG/L	ND	400	
BIS(2-CHLOROISOPROPYL)ETHER	UG/L	ND	400	
BIS(2-ETHYLHEXYL)PHTHALATE	UG/L	ND	400	
4-BROMOPHENYL-PHENYLETHER	UG/L	ND	400	
BUTYLBENZYLPHTHALATE	UG/L	ND	400	
4-CHLOROANILINE	UG/L	ND	400	
1-CHLORONAPHTHALENE	UG/L	ND	400	
2-CHLORONAPHTHALENE	UG/L	ND	400	
4-CHLOROPHENYL-PHENYLETHER	UG/L	ND	400	
CHRYSENE	UG/L	ND	400	
DIBENZO(A,H)ANTHRACENE	UG/L	ND	400	
DIBENZ(A,J)ACRIDINE	UG/L	ND	400	
DIBENZOFURAN	UG/L	ND	400	
1,2-DICHLOROBENZENE	UG/L	ND	400	
1,3-DICHLOROBENZENE	UG/L	ND	400	
1,4-DICHLOROBENZENE	UG/L	ND	400	
3,3'-DICHLOROBENZIDINE	UG/L	ND	2000	
DIETHYLPHTHALATE	UG/L	ND	400	
P-DIMETHYLAMINOAZOBENZENE	UG/L	ND	400	
7,12-DIMETHYLBENZO(a)ANTHRACENE	UG/L	ND	400	
A-,A-DIMETHYLPHENETHYLAMINE	UG/L	ND	400	
DIMETHYLPHTHALATE	UG/L	ND	400	
DI-N-BUTYLPHTHALATE	UG/L	ND	400	
2,4-DINITROTOLUENE	UG/L	ND	400	
2,6-DINITROTOLUENE	UG/L	ND	400	
DI-N-OCTYLPHTHALATE	UG/L	ND	400	

"FINAL REPORT FORMAT - SINGLE"

Accession: 603254
Client: CSX TRANSPORTATION
Project Number: 4365B
Project Name: CSX GREENVILLE
Project Location: GREENVILLE, SC
Test: BN EXTRACTABLES (8270)
Analysis Method: 8270 / SW-846, 3rd Edition, September 1986 and Rev. 1, July 1992.
Extraction Method: 3520 / SW-846, 3rd Edition, September 1986 and Rev. 1, July, 1992.
Matrix: GROUNDWATER
QC Level: II

Lab Id: 005
Client Sample Id: MW-3D
Sample Date/Time: 13-MAR-96 1450
Received Date: 14-MAR-96

Parameter:	Units:	Results:	Rpt Lmts:	Q:
DIPHENYLAMINE	UG/L	ND	400	
1,2-DIPHENYLHYDRAZINE	UG/L	ND	400	
FLUORANTHENE	UG/L	ND	400	
FLUORENE	UG/L	ND	400	
HEXACHLOROBENZENE	UG/L	ND	400	
HEXACHLOROBUTADIENE	UG/L	ND	400	
HEXACHLOROCYCLOPENTADIENE	UG/L	ND	400	
HEXACHLOROETHANE	UG/L	ND	400	
INDENO(1,2,3-cd)PYRENE	UG/L	ND	400	
ISOPHORONE	UG/L	ND	400	
3-METHYLCHOLANTHRENE	UG/L	ND	400	
2-METHYLNAPHTHALENE	UG/L	1800	400	
NAPHTHALENE	UG/L	8300	400	
1-NAPHTHYLAMINE	UG/L	ND	400	
2-NAPHTHYLAMINE	UG/L	ND	400	
2-NITROANILINE	UG/L	ND	400	
3-NITROANILINE	UG/L	ND	400	
4-NITROANILINE	UG/L	ND	400	
NITROBENZENE	UG/L	ND	400	
N-NITROSODIMETHYLAMINE	UG/L	ND	400	
N-NITROSODI-N-BUTYLAMINE	UG/L	ND	400	
N-NITROSODIPHENYLAMINE	UG/L	ND	400	
N-NITROSO-DI-N-PROPYLAMINE	UG/L	ND	400	
N-NITROSOPIPERIDINE	UG/L	ND	400	
PENTACHLOROBENZENE	UG/L	ND	400	
PENTACHLORONITROBENZENE (PCNB)	UG/L	ND	400	
PHENACETIN	UG/L	ND	400	
PHENANTHRENE	UG/L	ND	400	
2-PICOLINE	UG/L	ND	400	
PRONAMIDE	UG/L	ND	400	
PYRENE	UG/L	ND	400	
1,2,4,5-TETRACHLOROBENZENE	UG/L	ND	400	
1,2,4 TRICHLOROBENZENE	UG/L	ND	400	
2-FLUOROBIPHENYL	%REC/SURR	95	43-116	
NITROBENZENE-D5	%REC/SURR	37	35-114	
TERPHENYL-D14	%REC/SURR	103	33-124	
ANALYST	INITIALS	PL		

Comments:

"FINAL REPORT FORMAT - SINGLE"

Accession: 603254
Client: CSX TRANSPORTATION
Project Number: 4365B
Project Name: CSX GREENVILLE
Project Location: GREENVILLE, SC
Test: BN EXTRACTABLES (8270)
Analysis Method: 8270 / SW-846, 3rd Edition, September 1986 and Rev. 1, July 1992.
Extraction Method: 3520 / SW-846, 3rd Edition, September 1986 and Rev. 1, July, 1992.
Matrix: GROUNDWATER
QC Level: II

Lab Id: 006
Client Sample Id: MW-4

Sample Date/Time: 13-MAR-96 1550
Received Date: 14-MAR-96

Batch: ALW023
Blank: A

Dry Weight %: N/A

Extraction Date: 18-MAR-96
Analysis Date: 28-MAR-96

Parameter:	Units:	Results:	Rpt Lmts:	Q:
ACENAPHTHENE	UG/L	ND	10	
ACENAPHTHYLENE	UG/L	ND	10	
ACETOPHENONE	UG/L	ND	10	
4-AMINOBIPHENYL	UG/L	ND	10	
ANILINE	UG/L	ND	10	
ANTHRACENE	UG/L	ND	10	
BENZIDINE	UG/L	ND	10	
BENZO(a)ANTHRACENE	UG/L	ND	10	
BENZO(a)PYRENE	UG/L	ND	10	
BENZO(b)FLUORANTHENE	UG/L	ND	10	
BENZO(g,h,i)PERYLENE	UG/L	ND	10	
BENZO(k)FLUORANTHENE	UG/L	ND	10	
BENZYL ALCOHOL	UG/L	ND	10	
BIS(2-CHLOROETHYL)ETHER	UG/L	ND	10	
BIS(2-CHLOROETHOXY)METHANE	UG/L	ND	10	
BIS(2-CHLOROISOPROPYL)ETHER	UG/L	ND	10	
BIS(2-ETHYLHEXYL)PHTHALATE	UG/L	ND	10	
4-BROMOPHENYL-PHENYLETHER	UG/L	ND	10	
BUTYLBENZYLPHTHALATE	UG/L	ND	10	
4-CHLOROANILINE	UG/L	ND	10	
1-CHLORONAPHTHALENE	UG/L	ND	10	
2-CHLORONAPHTHALENE	UG/L	ND	10	
4-CHLOROPHENYL-PHENYLETHER	UG/L	ND	10	
CHRYSENE	UG/L	ND	10	
DIBENZO(A,H)ANTHRACENE	UG/L	ND	10	
DIBENZ(A,J)ACRIDINE	UG/L	ND	10	
DIBENZOFURAN	UG/L	ND	10	
1,2-DICHLOROBENZENE	UG/L	ND	10	
1,3-DICHLOROBENZENE	UG/L	ND	10	
1,4-DICHLOROBENZENE	UG/L	ND	10	
3,3'-DICHLOROBENZIDINE	UG/L	ND	10	
DIETHYLPHTHALATE	UG/L	ND	50	
P-DIMETHYLAMINOAZOBENZENE	UG/L	ND	10	
7,12-DIMETHYLBENZO(a)ANTHRACENE	UG/L	ND	10	
A-,A-DIMETHYLPHENETHYLAMINE	UG/L	ND	10	
DIMETHYLPHTHALATE	UG/L	ND	10	
DI-N-BUTYLPHTHALATE	UG/L	ND	10	
2,4-DINITROTOLUENE	UG/L	ND	10	
2,6-DINITROTOLUENE	UG/L	ND	10	
DI-N-OCTYLPHTHALATE	UG/L	ND	10	

"FINAL REPORT FORMAT - SINGLE"

Accession: 603254
Client: CSX TRANSPORTATION
Project Number: 4365B
Project Name: CSX GREENVILLE
Project Location: GREENVILLE, SC
Test: BN EXTRACTABLES (8270)
Analysis Method: 8270 / SW-846, 3rd Edition, September 1986 and Rev. 1, July 1992.
Extraction Method: 3520 / SW-846, 3rd Edition, September 1986 and Rev. 1, July, 1992.
Matrix: GROUNDWATER
QC Level: II

Lab Id: 006
Client Sample Id: MW-4
Sample Date/Time: 13-MAR-96 1550
Received Date: 14-MAR-96

Parameter:	Units:	Results:	Rpt Lmts:	Q:
DIPHENYLAMINE	UG/L	ND	10	
1,2-DIPHENYLHYDRAZINE	UG/L	ND	10	
FLUORANTHENE	UG/L	ND	10	
FLUORENE	UG/L	ND	10	
HEXACHLOROBENZENE	UG/L	ND	10	
HEXACHLOROBUTADIENE	UG/L	ND	10	
HEXACHLOROCYCLOPENTADIENE	UG/L	ND	10	
HEXACHLOROETHANE	UG/L	ND	10	
INDENO(1,2,3-cd)PYRENE	UG/L	ND	10	
ISOPHORONE	UG/L	ND	10	
3-METHYLCHOLANTHRENE	UG/L	ND	10	
2-METHYLNAPHTHALENE	UG/L	ND	10	
NAPHTHALENE	UG/L	ND	10	
1-NAPHTHYLAMINE	UG/L	ND	10	
2-NAPHTHYLAMINE	UG/L	ND	10	
2-NITROANILINE	UG/L	ND	10	
3-NITROANILINE	UG/L	ND	10	
4-NITROANILINE	UG/L	ND	10	
NITROBENZENE	UG/L	ND	10	
N-NITROSODIMETHYLAMINE	UG/L	ND	10	
N-NITROSODI-N-BUTYLAMINE	UG/L	ND	10	
N-NITROSODIPHENYLAMINE	UG/L	ND	10	
N-NITROSO-DI-N-PROPYLAMINE	UG/L	ND	10	
N-NITROSOPIPERIDINE	UG/L	ND	10	
PENTACHLOROBENZENE	UG/L	ND	10	
PENTACHLORONITROBENZENE (PCNB)	UG/L	ND	10	
PHENACETIN	UG/L	ND	10	
PHENANTHRENE	UG/L	ND	10	
2-PICOLINE	UG/L	ND	10	
PRONAMIDE	UG/L	ND	10	
PYRENE	UG/L	ND	10	
1,2,4,5-TETRACHLOROBENZENE	UG/L	ND	10	
1,2,4 TRICHLOROBENZENE	UG/L	ND	10	
2-FLUOROBIPHENYL	%REC/SURR	87	43-116	
NITROBENZENE-D5	%REC/SURR	89	35-114	
TERPHENYL-D14	%REC/SURR	103	33-124	
ANALYST	INITIALS	PL		

Comments:

"FINAL REPORT FORMAT - SINGLE"

Accession: 603254
Client: CSX TRANSPORTATION
Project Number: 4365B
Project Name: CSX GREENVILLE
Project Location: GREENVILLE, SC
Test: BN EXTRACTABLES (8270)
Analysis Method: 8270 / SW-846, 3rd Edition, September 1986 and Rev. 1, July 1992.
Extraction Method: 3520 / SW-846, 3rd Edition, September 1986 and Rev. 1, July, 1992.
Matrix: GROUNDWATER
QC Level: II

Lab Id: 007
Client Sample Id: MW-5
Sample Date/Time: 13-MAR-96 1720
Received Date: 14-MAR-96

Batch: ALW023
Blank: A
Dry Weight %: N/A
Extraction Date: 18-MAR-96
Analysis Date: 28-MAR-96

Parameter:	Units:	Results:	Rpt Lmts:	Q:
ACENAPHTHENE	UG/L	ND	10	
ACENAPHTHYLENE	UG/L	ND	10	
ACETOPHENONE	UG/L	ND	10	
4-AMINOBIPHENYL	UG/L	ND	10	
ANILINE	UG/L	ND	10	
ANTHRACENE	UG/L	ND	10	
BENZIDINE	UG/L	ND	10	
BENZO(a)ANTHRACENE	UG/L	ND	10	
BENZO(a)PYRENE	UG/L	ND	10	
BENZO(b)FLUORANTHENE	UG/L	ND	10	
BENZO(g,h,i)PERYLENE	UG/L	ND	10	
BENZO(k)FLUORANTHENE	UG/L	ND	10	
BENZYL ALCOHOL	UG/L	ND	10	
BIS(2-CHLOROETHYL)ETHER	UG/L	ND	10	
BIS(2-CHLOROETHOXY)METHANE	UG/L	ND	10	
BIS(2-CHLOROISOPROPYL)ETHER	UG/L	ND	10	
BIS(2-ETHYLHEXYL)PHTHALATE	UG/L	ND	10	
4-BROMOPHENYL-PHENYLETHER	UG/L	ND	10	
BUTYLBENZYLPHTHALATE	UG/L	ND	10	
4-CHLOROANILINE	UG/L	ND	10	
1-CHLORONAPHTHALENE	UG/L	ND	10	
2-CHLORONAPHTHALENE	UG/L	ND	10	
4-CHLOROPHENYL-PHENYLETHER	UG/L	ND	10	
CHRYSENE	UG/L	ND	10	
DIBENZO(A,H)ANTHRACENE	UG/L	ND	10	
DIBENZ(A,J)ACRIDINE	UG/L	ND	10	
DIBENZOFURAN	UG/L	ND	10	
1,2-DICHLOROBENZENE	UG/L	ND	10	
1,3-DICHLOROBENZENE	UG/L	ND	10	
1,4-DICHLOROBENZENE	UG/L	ND	10	
3,3'-DICHLOROBENZIDINE	UG/L	ND	50	
DIETHYLPHTHALATE	UG/L	ND	10	
P-DIMETHYLAMINOAZOBENZENE	UG/L	ND	10	
7,12-DIMETHYLBENZO(a)ANTHRACENE	UG/L	ND	10	
A-,A-DIMETHYLPHENETHYLAMINE	UG/L	ND	10	
DIMETHYLPHTHALATE	UG/L	ND	10	
DI-N-BUTYLPHTHALATE	UG/L	ND	10	
2,4-DINITROTOLUENE	UG/L	ND	10	
2,6-DINITROTOLUENE	UG/L	ND	10	
DI-N-OCTYLPHTHALATE	UG/L	ND	10	

"FINAL REPORT FORMAT - SINGLE"

Accession: 603254
Client: CSX TRANSPORTATION
Project Number: 4365B
Project Name: CSX GREENVILLE
Project Location: GREENVILLE, SC
Test: BN EXTRACTABLES (8270)
Analysis Method: 8270 / SW-846, 3rd Edition, September 1986 and Rev. 1, July 1992.
Extraction Method: 3520 / SW-846, 3rd Edition, September 1986 and Rev. 1, July, 1992.
Matrix: GROUNDWATER
QC Level: II

Lab Id: 007
Client Sample Id: MW-5
Sample Date/Time: 13-MAR-96 1720
Received Date: 14-MAR-96

Parameter:	Units:	Results:	Rpt Lmts:	Q:
DIPHENYLAMINE	UG/L	ND	10	
1,2-DIPHENYLHYDRAZINE	UG/L	ND	10	
FLUORANTHENE	UG/L	ND	10	
FLUORENE	UG/L	ND	10	
HEXACHLOROBENZENE	UG/L	ND	10	
HEXACHLOROBUTADIENE	UG/L	ND	10	
HEXACHLOROCYCLOPENTADIENE	UG/L	ND	10	
HEXACHLOROETHANE	UG/L	ND	10	
INDENO(1,2,3-cd)PYRENE	UG/L	ND	10	
ISOPHORONE	UG/L	ND	10	
3-METHYLCHOLANTHRENE	UG/L	ND	10	
2-METHYLNAPHTHALENE	UG/L	ND	10	
NAPHTHALENE	UG/L	12	10	
1-NAPHTHYLAMINE	UG/L	ND	10	
2-NAPHTHYLAMINE	UG/L	ND	10	
2-NITROANILINE	UG/L	ND	10	
3-NITROANILINE	UG/L	ND	10	
4-NITROANILINE	UG/L	ND	10	
NITROBENZENE	UG/L	ND	10	
N-NITROSODIMETHYLAMINE	UG/L	ND	10	
N-NITROSODI-N-BUTYLAMINE	UG/L	ND	10	
N-NITROSODIPHENYLAMINE	UG/L	ND	10	
N-NITROSO-DI-N-PROPYLAMINE	UG/L	ND	10	
N-NITROSOPIPERIDINE	UG/L	ND	10	
PENTACHLOROBENZENE	UG/L	ND	10	
PENTACHLORONITROBENZENE (PCNB)	UG/L	ND	10	
PHENACETIN	UG/L	ND	10	
PHENANTHRENE	UG/L	ND	10	
2-PICOLINE	UG/L	ND	10	
PRONAMIDE	UG/L	ND	10	
PYRENE	UG/L	ND	10	
1,2,4,5-TETRACHLOROBENZENE	UG/L	ND	10	
1,2,4 TRICHLOROBENZENE	UG/L	ND	10	
2-FLUOROBIPHENYL	%REC/SURR	88	43-116	
NITROBENZENE-D5	%REC/SURR	87	35-114	
TERPHENYL-D14	%REC/SURR	100	33-124	
ANALYST	INITIALS	PL		

Comments:

"FINAL REPORT FORMAT - SINGLE"

Accession: 603254
Client: CSX TRANSPORTATION
Project Number: 4365B
Project Name: CSX GREENVILLE
Project Location: GREENVILLE, SC
Test: BN EXTRACTABLES (8270)
Analysis Method: 8270 / SW-846, 3rd Edition, September 1986 and Rev. 1, July 1992.
Extraction Method: 3520 / SW-846, 3rd Edition, September 1986 and Rev. 1, July, 1992.
Matrix: GROUNDWATER
QC Level: II

Lab Id: 008
Client Sample Id: MW-6
Sample Date/Time: 13-MAR-96 1615
Received Date: 14-MAR-96

Batch: ALW023
Blank: A
Dry Weight %: N/A
Extraction Date: 18-MAR-96
Analysis Date: 28-MAR-96

Parameter:	Units:	Results:	Rpt Lmts:	Q:
ACENAPHTHENE	UG/L	150	40	
ACENAPHTHYLENE	UG/L	360	40	
ACETOPHENONE	UG/L	ND	40	
4-AMINOBIPHENYL	UG/L	ND	40	
ANILINE	UG/L	ND	40	
ANTHRACENE	UG/L	120	40	
BENZIDINE	UG/L	ND	40	
BENZO(a)ANTHRACENE	UG/L	ND	40	
BENZO(a)PYRENE	UG/L	ND	40	
BENZO(b)FLUORANTHENE	UG/L	ND	40	
BENZO(g,h,i)PERYLENE	UG/L	ND	40	
BENZO(k)FLUORANTHENE	UG/L	ND	40	
BENZYL ALCOHOL	UG/L	ND	40	
BIS(2-CHLOROETHYL)ETHER	UG/L	ND	40	
BIS(2-CHLOROETHOXY)METHANE	UG/L	ND	40	
BIS(2-CHLOROISOPROPYL)ETHER	UG/L	ND	40	
BIS(2-ETHYLHEXYL)PHTHALATE	UG/L	ND	40	
4-BROMOPHENYL-PHENYLETHER	UG/L	ND	40	
BUTYLBENZYLPHTHALATE	UG/L	ND	40	
4-CHLOROANILINE	UG/L	ND	40	
1-CHLORONAPHTHALENE	UG/L	ND	40	
2-CHLORONAPHTHALENE	UG/L	ND	40	
4-CHLOROPHENYL-PHENYLETHER	UG/L	ND	40	
CHRYSENE	UG/L	ND	40	
DIBENZO(A,H)ANTHRACENE	UG/L	ND	40	
DIBENZ(A,J)ACRIDINE	UG/L	ND	40	
DIBENZOFURAN	UG/L	220	40	
1,2-DICHLOROBENZENE	UG/L	ND	40	
1,3-DICHLOROBENZENE	UG/L	ND	40	
1,4-DICHLOROBENZENE	UG/L	ND	40	
3,3'-DICHLOROBENZIDINE	UG/L	ND	200	
DIETHYLPHTHALATE	UG/L	ND	40	
P-DIMETHYLAMINOAZOBENZENE	UG/L	ND	40	
7,12-DIMETHYLBENZO(a)ANTHRACENE	UG/L	ND	40	
A-,A-DIMETHYLPHENETHYLAMINE	UG/L	ND	40	
DIMETHYLPHTHALATE	UG/L	ND	40	
DI-N-BUTYLPHTHALATE	UG/L	ND	40	
2,4-DINITROTOLUENE	UG/L	ND	40	
2,6-DINITROTOLUENE	UG/L	ND	40	
DI-N-OCTYLPHTHALATE	UG/L	ND	40	

"FINAL REPORT FORMAT - SINGLE"

Accession: 603254
Client: CSX TRANSPORTATION
Project Number: 4365B
Project Name: CSX GREENVILLE
Project Location: GREENVILLE, SC
Test: BN EXTRACTABLES (8270)
Analysis Method: 8270 / SW-846, 3rd Edition, September 1986 and Rev. 1, July 1992.
Extraction Method: 3520 / SW-846, 3rd Edition, September 1986 and Rev. 1, July, 1992.
Matrix: GROUNDWATER
QC Level: II

Lab Id: 008
Client Sample Id: MW-6
Sample Date/Time: 13-MAR-96 1615
Received Date: 14-MAR-96

Parameter:	Units:	Results:	Rpt Lmts:	Q:
DIPHENYLAMINE	UG/L	ND	40	
1,2-DIPHENYLHYDRAZINE	UG/L	ND	40	
FLUORANTHENE	UG/L	130	40	
FLUORENE	UG/L	250	40	
HEXACHLOROBENZENE	UG/L	ND	40	
HEXACHLOROBUTADIENE	UG/L	ND	40	
HEXACHLOROCYCLOPENTADIENE	UG/L	ND	40	
HEXACHLOROETHANE	UG/L	ND	40	
INDENO(1,2,3-cd)PYRENE	UG/L	ND	40	
ISOPHORONE	UG/L	ND	40	
3-METHYLCHOLANTHRENE	UG/L	ND	40	
2-METHYLNAPHTHALENE	UG/L	330	40	
NAPHTHALENE	UG/L	1800	40	
1-NAPHTHYLAMINE	UG/L	ND	40	
2-NAPHTHYLAMINE	UG/L	ND	40	
2-NITROANILINE	UG/L	ND	40	
3-NITROANILINE	UG/L	ND	40	
4-NITROANILINE	UG/L	ND	40	
NITROBENZENE	UG/L	ND	40	
N-NITROSODIMETHYLAMINE	UG/L	ND	40	
N-NITROSODI-N-BUTYLAMINE	UG/L	ND	40	
N-NITROSODIPHENYLAMINE	UG/L	ND	40	
N-NITROSO-DI-N-PROPYLAMINE	UG/L	ND	40	
N-NITROSOPIPERIDINE	UG/L	ND	40	
PENTACHLOROBENZENE	UG/L	ND	40	
PENTACHLORONITROBENZENE (PCNB)	UG/L	ND	40	
PHENACETIN	UG/L	ND	40	
PHENANTHRENE	UG/L	360	40	
2-PICOLINE	UG/L	ND	40	
PRONAMIDE	UG/L	ND	40	
PYRENE	UG/L	97	40	
1,2,4,5-TETRACHLOROBENZENE	UG/L	ND	40	
1,2,4 TRICHLOROBENZENE	UG/L	ND	40	
2-FLUOROBIPHENYL	%REC/SURR	100	43-116	
NITROBENZENE-D5	%REC/SURR	79	35-114	
TERPHENYL-D14	%REC/SURR	111	33-124	
ANALYST	INITIALS	PL		

Comments:

"FINAL REPORT FORMAT - SINGLE"

Accession: 603254
Client: CSX TRANSPORTATION
Project Number: 4365B
Project Name: CSX GREENVILLE
Project Location: GREENVILLE, SC
Test: BN EXTRACTABLES (8270)
Analysis Method: 8270 / SW-846, 3rd Edition, September 1986 and Rev. 1, July 1992.
Extraction Method: 3520 / SW-846, 3rd Edition, September 1986 and Rev. 1, July, 1992.
Matrix: GROUNDWATER
QC Level: II

Lab Id: 009
Client Sample Id: MW-7
Sample Date/Time: 13-MAR-96 0815
Received Date: 14-MAR-96

Batch: ALW023
Blank: A
Dry Weight %: N/A
Extraction Date: 18-MAR-96
Analysis Date: 02-APR-96

Parameter:	Units:	Results:	Rpt Lmts:	Q:
ACENAPHTHENE	UG/L	ND	100	
ACENAPHTHYLENE	UG/L	ND	100	
ACETOPHENONE	UG/L	ND	100	
4-AMINOBIPHENYL	UG/L	ND	100	
ANILINE	UG/L	ND	100	
ANTHRACENE	UG/L	ND	100	
BENZIDINE	UG/L	ND	100	
BENZO(a)ANTHRACENE	UG/L	ND	100	
BENZO(a)PYRENE	UG/L	ND	100	
BENZO(b)FLUORANTHENE	UG/L	ND	100	
BENZO(g,h,i)PERYLENE	UG/L	ND	100	
BENZO(k)FLUORANTHENE	UG/L	ND	100	
BENZYL ALCOHOL	UG/L	ND	100	
BIS(2-CHLOROETHYL)ETHER	UG/L	ND	100	
BIS(2-CHLOROETHOXY)METHANE	UG/L	ND	100	
BIS(2-CHLOROISOPROPYL)ETHER	UG/L	ND	100	
BIS(2-ETHYLHEXYL)PHTHALATE	UG/L	ND	100	
4-BROMOPHENYL-PHENYLETHER	UG/L	ND	100	
BUTYLBENZYLPHTHALATE	UG/L	ND	100	
4-CHLOROANILINE	UG/L	ND	100	
1-CHLORONAPHTHALENE	UG/L	ND	100	
2-CHLORONAPHTHALENE	UG/L	ND	100	
4-CHLOROPHENYL-PHENYLETHER	UG/L	ND	100	
CHRYSENE	UG/L	ND	100	
DIBENZO(A,H)ANTHRACENE	UG/L	ND	100	
DIBENZ(A,J)ACRIDINE	UG/L	ND	100	
DIBENZOFURAN	UG/L	ND	100	
1,2-DICHLOROBENZENE	UG/L	ND	100	
1,3-DICHLOROBENZENE	UG/L	ND	100	
1,4-DICHLOROBENZENE	UG/L	ND	100	
3,3'-DICHLOROBENZIDINE	UG/L	ND	500	
DIETHYLPHTHALATE	UG/L	ND	100	
P-DIMETHYLAMINOAZOBENZENE	UG/L	ND	100	
7,12-DIMETHYLBENZO(a)ANTHRACENE	UG/L	ND	100	
A-,A-DIMETHYLPHENETHYLAMINE	UG/L	ND	100	
DIMETHYLPHTHALATE	UG/L	ND	100	
DI-N-BUTYLPHTHALATE	UG/L	ND	100	
2,4-DINITROTOLUENE	UG/L	ND	100	
2,6-DINITROTOLUENE	UG/L	ND	100	
DI-N-OCTYLPHTHALATE	UG/L	ND	100	

"FINAL REPORT FORMAT - SINGLE"

Accession: 603254
Client: CSX TRANSPORTATION
Project Number: 4365B
Project Name: CSX GREENVILLE
Project Location: GREENVILLE, SC
Test: BN EXTRACTABLES (8270)
Analysis Method: 8270 / SW-846, 3rd Edition, September 1986 and Rev. 1, July 1992.
Extraction Method: 3520 / SW-846, 3rd Edition, September 1986 and Rev. 1, July, 1992.
Matrix: GROUNDWATER
QC Level: II

Lab Id: 009
Client Sample Id: MW-7
Sample Date/Time: 13-MAR-96 0815
Received Date: 14-MAR-96

Parameter:	Units:	Results:	Rpt Lmts:	Q:
DIPHENYLAMINE	UG/L	ND	100	
1,2-DIPHENYLHYDRAZINE	UG/L	ND	100	
FLUORANTHENE	UG/L	ND	100	
FLUORENE	UG/L	ND	100	
HEXACHLOROBENZENE	UG/L	ND	100	
HEXACHLOROBUTADIENE	UG/L	ND	100	
HEXACHLOROCYCLOPENTADIENE	UG/L	ND	100	
HEXACHLOROETHANE	UG/L	ND	100	
INDENO(1,2,3-cd)PYRENE	UG/L	ND	100	
ISOPHORONE	UG/L	ND	100	
3-METHYLCHOLANTHRENE	UG/L	ND	100	
2-METHYLNAPHTHALENE	UG/L	130	100	
NAPHTHALENE	UG/L	1900	100	
1-NAPHTHYLAMINE	UG/L	ND	100	
2-NAPHTHYLAMINE	UG/L	ND	100	
2-NITROANILINE	UG/L	ND	100	
3-NITROANILINE	UG/L	ND	100	
4-NITROANILINE	UG/L	ND	100	
NITROBENZENE	UG/L	ND	100	
N-NITROSODIMETHYLAMINE	UG/L	ND	100	
N-NITROSODI-N-BUTYLAMINE	UG/L	ND	100	
N-NITROSODIPHENYLAMINE	UG/L	ND	100	
N-NITROSO-DI-N-PROPYLAMINE	UG/L	ND	100	
N-NITROSOPIPERIDINE	UG/L	ND	100	
PENTACHLOROBENZENE	UG/L	ND	100	
PENTACHLORONITROBENZENE (PCNB)	UG/L	ND	100	
PHENACETIN	UG/L	ND	100	
PHENANTHRENE	UG/L	ND	100	
2-PICOLINE	UG/L	ND	100	
PRONAMIDE	UG/L	ND	100	
PYRENE	UG/L	ND	100	
1,2,4,5-TETRACHLOROBENZENE	UG/L	ND	100	
1,2,4 TRICHLOROBENZENE	UG/L	ND	100	
2-FLUOROBIPHENYL	%REC/SURR	93	43-116	
NITROBENZENE-D5	%REC/SURR	56	35-114	
TERPHENYL-D14	%REC/SURR	94	33-124	
ANALYST	INITIALS	PL		

Comments:

"FINAL REPORT FORMAT - SINGLE"

Accession: 603254
Client: CSX TRANSPORTATION
Project Number: 4365B
Project Name: CSX GREENVILLE
Project Location: GREENVILLE, SC
Test: BN EXTRACTABLES (8270)
Analysis Method: 8270 / SW-846, 3rd Edition, September 1986 and Rev. 1, July 1992.
Extraction Method: 3550 / SW-846, 3rd Edition, September 1986 and Rev. 1, July 1992.
Matrix: SOIL
QC Level: II

Lab Id: 010
Client Sample Id: DP1A
Sample Date/Time: 12-MAR-96 0950
Received Date: 14-MAR-96

Batch: ALS021
Blank: A
Dry Weight %: 83
Extraction Date: 19-MAR-96
Analysis Date: 29-MAR-96

Parameter:	Units:	Results:	Rpt Lmts:	Q:
ACENAPHTHENE	UG/KG	20000	4000	
ACENAPHTHYLENE	UG/KG	ND	4000	
ACETOPHENONE	UG/KG	ND	4000	
4-AMINOBIPHENYL	UG/KG	ND	4000	
ANILINE	UG/KG	ND	4000	
ANTHRACENE	UG/KG	15000	4000	
BENZIDINE	UG/KG	ND	4000	
BENZO(a)ANTHRACENE	UG/KG	14000	4000	
BENZO(a)PYRENE	UG/KG	12000	4000	
BENZO(b)FLUORANTHENE	UG/KG	9100	4000	
BENZO(g,h,i)PERYLENE	UG/KG	7500	4000	
BENZO(k)FLUORANTHENE	UG/KG	9600	4000	
BENZYL ALCOHOL	UG/KG	ND	4000	
BIS(2-CHLOROETHYL)ETHER	UG/KG	ND	4000	
BIS(2-CHLOROETHOXY)METHANE	UG/KG	ND	4000	
BIS(2-CHLOROISOPROPYL)ETHER	UG/KG	ND	4000	
BIS(2-ETHYLHEXYL)PHTHALATE	UG/KG	ND	4000	
4-BROMOPHENYL-PHENYLETHER	UG/KG	ND	4000	
BUTYLBENZYLPHTHALATE	UG/KG	ND	4000	
4-CHLOROANILINE	UG/KG	ND	4000	
1-CHLORONAPHTHALENE	UG/KG	ND	4000	
2-CHLORONAPHTHALENE	UG/KG	ND	4000	
4-CHLOROPHENYL-PHENYLETHER	UG/KG	ND	4000	
CHRYSENE	UG/KG	13000	4000	
DIBENZO(A,H)ANTHRACENE	UG/KG	ND	4000	
DIBENZ(A,J)ACRIDINE	UG/KG	ND	4000	
DIBENZOFURAN	UG/KG	15000	4000	
1,2-DICHLOROBENZENE	UG/KG	ND	4000	
1,3-DICHLOROBENZENE	UG/KG	ND	4000	
1,4-DICHLOROBENZENE	UG/KG	ND	4000	
3,3'-DICHLOROBENZIDINE	UG/KG	ND	20000	
DIETHYLPHTHALATE	UG/KG	ND	4000	
P-DIMETHYLAMINOAZOBENZENE	UG/KG	ND	4000	
7,12-DIMETHYLBENZO(a)ANTHRACENE	UG/KG	ND	4000	
A-,A-DIMETHYLPHENETHYLAMINE	UG/KG	ND	4000	
DIMETHYLPHTHALATE	UG/KG	ND	4000	
DI-N-BUTYLPHTHALATE	UG/KG	ND	4000	
2,4-DINITROTOLUENE	UG/KG	ND	4000	
2,6-DINITROTOLUENE	UG/KG	ND	4000	
DI-N-OCTYLPHTHALATE	UG/KG	ND	4000	

"FINAL REPORT FORMAT - SINGLE"

Accession: 603254
Client: CSX TRANSPORTATION
Project Number: 4365B
Project Name: CSX GREENVILLE
Project Location: GREENVILLE, SC
Test: BN EXTRACTABLES (8270)
Analysis Method: 8270 / SW-846, 3rd Edition, September 1986 and Rev. 1, July 1992.
Extraction Method: 3550 / SW-846, 3rd Edition, September 1986 and Rev. 1, July 1992.
Matrix: SOIL
QC Level: II

Lab Id: 010
Client Sample Id: DP1A
Sample Date/Time: 12-MAR-96 0950
Received Date: 14-MAR-96

Parameter:	Units:	Results:	Rpt Lmts:	Q:
DIPHENYLAMINE	UG/KG	ND	4000	
1,2-DIPHENYLHYDRAZINE	UG/KG	ND	4000	
FLUORANTHENE	UG/KG	32000	4000	
FLUORENE	UG/KG	17000	4000	
HEXACHLOROBENZENE	UG/KG	ND	4000	
HEXACHLOROBUTADIENE	UG/KG	ND	4000	
HEXACHLOROCYCLOPENTADIENE	UG/KG	ND	4000	
HEXACHLOROETHANE	UG/KG	ND	4000	
INDENO(1,2,3-cd)PYRENE	UG/KG	6700	4000	
ISOPHORONE	UG/KG	ND	4000	
3-METHYLCHOLANTHRENE	UG/KG	ND	4000	
2-METHYLNAPHTHALENE	UG/KG	13000	4000	
NAPHTHALENE	UG/KG	48000	4000	
1-NAPHTHYLAMINE	UG/KG	ND	4000	
2-NAPHTHYLAMINE	UG/KG	ND	4000	
2-NITROANILINE	UG/KG	ND	4000	
3-NITROANILINE	UG/KG	ND	4000	
4-NITROANILINE	UG/KG	ND	4000	
NITROBENZENE	UG/KG	ND	4000	
N-NITROSODIMETHYLAMINE	UG/KG	ND	4000	
N-NITROSODI-N-BUTYLAMINE	UG/KG	ND	4000	
N-NITROSODIPHENYLAMINE	UG/KG	ND	4000	
N-NITROSO-DI-N-PROPYLAMINE	UG/KG	ND	4000	
N-NITROSOPIPERIDINE	UG/KG	ND	4000	
PENTACHLOROBENZENE	UG/KG	ND	4000	
PENTACHLORONITROBENZENE (PCNB)	UG/KG	ND	4000	
PHENACETIN	UG/KG	ND	4000	
PHENANTHRENE	UG/KG	44000	4000	
2-PICOLINE	UG/KG	ND	4000	
PRONAMIDE	UG/KG	ND	4000	
PYRENE	UG/KG	30000	4000	
1,2,4,5-TETRACHLOROBENZENE	UG/KG	ND	4000	
1,2,4 TRICHLOROBENZENE	UG/KG	ND	4000	
2-FLUOROBIPHENYL	%REC/SURR	50	30-115	
NITROBENZENE-D5	%REC/SURR	24	23-120	
TERPHENYL-D14	%REC/SURR	54	18-137	
ANALYST	INITIALS	PL		

Comments:

ANALYTICAL TECHNOLOGIES, INC. 11 East Olive Road Pensacola, Florida 32514 (904) 474-1001

"FINAL REPORT FORMAT - SINGLE"

Accession: 603254
Client: CSX TRANSPORTATION
Project Number: 4365B
Project Name: CSX GREENVILLE
Project Location: GREENVILLE, SC
Test: BN EXTRACTABLES (8270)
Analysis Method: 8270 / SW-846, 3rd Edition, September 1986 and Rev. 1, July 1992.
Extraction Method: 3550 / SW-846, 3rd Edition, September 1986 and Rev. 1, July 1992.
Matrix: SOIL
QC Level: II

Lab Id: 011
Client Sample Id: DP14
Sample Date/Time: 13-MAR-96 0900
Received Date: 14-MAR-96

Batch: ALS021
Blank: A
Dry Weight %: 75
Extraction Date: 19-MAR-96
Analysis Date: 29-MAR-96

Parameter:	Units:	Results:	Rpt Lmts:	Q:
ACENAPHTHENE	UG/KG	ND	440	
ACENAPHTHYLENE	UG/KG	ND	440	
ACETOPHENONE	UG/KG	ND	440	
4-AMINOBIPHENYL	UG/KG	ND	440	
ANILINE	UG/KG	ND	440	
ANTHRACENE	UG/KG	ND	440	
BENZIDINE	UG/KG	ND	440	
BENZO(a)ANTHRACENE	UG/KG	ND	440	
BENZO(a)PYRENE	UG/KG	ND	440	
BENZO(b)FLUORANTHENE	UG/KG	ND	440	
BENZO(g,h,i)PERYLENE	UG/KG	ND	440	
BENZO(k)FLUORANTHENE	UG/KG	ND	440	
BENZYL ALCOHOL	UG/KG	ND	440	
BIS(2-CHLOROETHYL)ETHER	UG/KG	ND	440	
BIS(2-CHLOROETHOXY)METHANE	UG/KG	ND	440	
BIS(2-CHLOROISOPROPYL)ETHER	UG/KG	ND	440	
BIS(2-ETHYLHEXYL)PHTHALATE	UG/KG	ND	440	
4-BROMOPHENYL-PHENYLETHER	UG/KG	ND	440	
BUTYLBENZYLPHTHALATE	UG/KG	ND	440	
4-CHLOROANILINE	UG/KG	ND	440	
1-CHLORONAPHTHALENE	UG/KG	ND	440	
2-CHLORONAPHTHALENE	UG/KG	ND	440	
4-CHLOROPHENYL-PHENYLETHER	UG/KG	ND	440	
CHRYSENE	UG/KG	ND	440	
DIBENZO(A,H)ANTHRACENE	UG/KG	ND	440	
DIBENZ(A,J)ACRIDINE	UG/KG	ND	440	
DIBENZOFURAN	UG/KG	ND	440	
1,2-DICHLOROBENZENE	UG/KG	ND	440	
1,3-DICHLOROBENZENE	UG/KG	ND	440	
1,4-DICHLOROBENZENE	UG/KG	ND	440	
3,3'-DICHLOROBENZIDINE	UG/KG	ND	2200	
DIETHYLPHTHALATE	UG/KG	ND	440	
P-DIMETHYLAMINOAZOBENZENE	UG/KG	ND	440	
7,12-DIMETHYLBENZO(a)ANTHRACENE	UG/KG	ND	440	
A-,A-DIMETHYLPHENETHYLAMINE	UG/KG	ND	440	
DIMETHYLPHTHALATE	UG/KG	ND	440	
DI-N-BUTYLPHTHALATE	UG/KG	ND	440	
2,4-DINITROTOLUENE	UG/KG	ND	440	
2,6-DINITROTOLUENE	UG/KG	ND	440	
DI-N-OCTYLPHTHALATE	UG/KG	ND	440	

"FINAL REPORT FORMAT - SINGLE"

Accession: 603254
Client: CSX TRANSPORTATION
Project Number: 4365B
Project Name: CSX GREENVILLE
Project Location: GREENVILLE, SC
Test: BN EXTRACTABLES (8270)
Analysis Method: 8270 / SW-846, 3rd Edition, September 1986 and Rev. 1, July 1992.
Extraction Method: 3550 / SW-846, 3rd Edition, September 1986 and Rev. 1, July 1992.
Matrix: SOIL
QC Level: II

Lab Id: 011
Client Sample Id: DP14
Sample Date/Time: 13-MAR-96 0900
Received Date: 14-MAR-96

Parameter:	Units:	Results:	Rpt Lmts:	Q:
DIPHENYLAMINE	UG/KG	ND	440	
1,2-DIPHENYLHYDRAZINE	UG/KG	ND	440	
FLUORANTHENE	UG/KG	ND	440	
FLUORENE	UG/KG	ND	440	
HEXACHLOROBENZENE	UG/KG	ND	440	
HEXACHLOROBUTADIENE	UG/KG	ND	440	
HEXACHLOROCYCLOPENTADIENE	UG/KG	ND	440	
HEXACHLOROETHANE	UG/KG	ND	440	
INDENO(1,2,3-cd)PYRENE	UG/KG	ND	440	
ISOPHORONE	UG/KG	ND	440	
3-METHYLCHOLANTHRENE	UG/KG	ND	440	
2-METHYLNAPHTHALENE	UG/KG	ND	440	
NAPHTHALENE	UG/KG	ND	440	
1-NAPHTHYLAMINE	UG/KG	ND	440	
2-NAPHTHYLAMINE	UG/KG	ND	440	
2-NITROANILINE	UG/KG	ND	440	
3-NITROANILINE	UG/KG	ND	440	
4-NITROANILINE	UG/KG	ND	440	
NITROBENZENE	UG/KG	ND	440	
N-NITROSODIMETHYLAMINE	UG/KG	ND	440	
N-NITROSODI-N-BUTYLAMINE	UG/KG	ND	440	
N-NITROSODIPHENYLAMINE	UG/KG	ND	440	
N-NITROSO-DI-N-PROPYLAMINE	UG/KG	ND	440	
N-NITROSOPIPERIDINE	UG/KG	ND	440	
PENTACHLOROBENZENE	UG/KG	ND	440	
PENTACHLORONITROBENZENE (PCNB)	UG/KG	ND	440	
PHENACETIN	UG/KG	ND	440	
PHENANTHRENE	UG/KG	ND	440	
2-PICOLINE	UG/KG	ND	440	
PRONAMIDE	UG/KG	ND	440	
PYRENE	UG/KG	ND	440	
1,2,4,5-TETRACHLOROBENZENE	UG/KG	ND	440	
1,2,4 TRICHLOROBENZENE	UG/KG	ND	440	
2-FLUOROBIPHENYL	%REC/SURR	65	30-115	
NITROBENZENE-D5	%REC/SURR	58	23-120	
TERPHENYL-D14	%REC/SURR	87	18-137	
ANALYST	INITIALS	PL		

Comments:

"FINAL REPORT FORMAT - SINGLE"

Accession: 603254
Client: CSX TRANSPORTATION
Project Number: 4365B
Project Name: CSX GREENVILLE
Project Location: GREENVILLE, SC
Test: BN EXTRACTABLES (8270)
Analysis Method: 8270 / SW-846, 3rd Edition, September 1986 and Rev. 1, July 1992.
Extraction Method: 3550 / SW-846, 3rd Edition, September 1986 and Rev. 1, July 1992.
Matrix: SOIL
QC Level: II

Lab Id: 012
Client Sample Id: DP18
Sample Date/Time: 13-MAR-96 1020
Received Date: 14-MAR-96

Batch: ALS021
Blank: A
Dry Weight %: 83
Extraction Date: 19-MAR-96
Analysis Date: 29-MAR-96

Parameter:	Units:	Results:	Rpt Lmts:	Q:
ACENAPHTHENE	UG/KG	ND	400	
ACENAPHTHYLENE	UG/KG	ND	400	
ACETOPHENONE	UG/KG	ND	400	
4-AMINOBIPHENYL	UG/KG	ND	400	
ANILINE	UG/KG	ND	400	
ANTHRACENE	UG/KG	ND	400	
BENZIDINE	UG/KG	ND	400	
BENZO(a)ANTHRACENE	UG/KG	ND	400	
BENZO(a)PYRENE	UG/KG	ND	400	
BENZO(b)FLUORANTHENE	UG/KG	ND	400	
BENZO(g,h,i)PERYLENE	UG/KG	ND	400	
BENZO(k)FLUORANTHENE	UG/KG	ND	400	
BENZYL ALCOHOL	UG/KG	ND	400	
BIS(2-CHLOROETHYL)ETHER	UG/KG	ND	400	
BIS(2-CHLOROETHOXY)METHANE	UG/KG	ND	400	
BIS(2-CHLOROISOPROPYL)ETHER	UG/KG	ND	400	
BIS(2-ETHYLHEXYL)PHTHALATE	UG/KG	ND	400	
4-BROMOPHENYL-PHENYLETHER	UG/KG	ND	400	
BUTYLBENZYLPHTHALATE	UG/KG	ND	400	
4-CHLOROANILINE	UG/KG	ND	400	
1-CHLORONAPHTHALENE	UG/KG	ND	400	
2-CHLORONAPHTHALENE	UG/KG	ND	400	
4-CHLOROPHENYL-PHENYLETHER	UG/KG	ND	400	
CHRYSENE	UG/KG	ND	400	
DIBENZO(A,H)ANTHRACENE	UG/KG	ND	400	
DIBENZ(A,J)ACRIDINE	UG/KG	ND	400	
DIBENZOFURAN	UG/KG	ND	400	
1,2-DICHLOROBENZENE	UG/KG	ND	400	
1,3-DICHLOROBENZENE	UG/KG	ND	400	
1,4-DICHLOROBENZENE	UG/KG	ND	400	
3,3'-DICHLOROBENZIDINE	UG/KG	ND	2000	
DIETHYLPHTHALATE	UG/KG	ND	400	
P-DIMETHYLAMINOAZOBENZENE	UG/KG	ND	400	
7,12-DIMETHYLBENZO(a)ANTHRACENE	UG/KG	ND	400	
A-,A-DIMETHYLPHENETHYLAMINE	UG/KG	ND	400	
DIMETHYLPHTHALATE	UG/KG	ND	400	
DI-N-BUTYLPHTHALATE	UG/KG	ND	400	
2,4-DINITROTOLUENE	UG/KG	ND	400	
2,6-DINITROTOLUENE	UG/KG	ND	400	
DI-N-OCTYLPHTHALATE	UG/KG	ND	400	

"FINAL REPORT FORMAT - SINGLE"

Accession: 603254
Client: CSX TRANSPORTATION
Project Number: 4365B
Project Name: CSX GREENVILLE
Project Location: GREENVILLE, SC
Test: BN EXTRACTABLES (8270)
Analysis Method: 8270 / SW-846, 3rd Edition, September 1986 and Rev. 1, July 1992.
Extraction Method: 3550 / SW-846, 3rd Edition, September 1986 and Rev. 1, July 1992.
Matrix: SOIL
QC Level: II

Lab Id: 012
Client Sample Id: DP18
Sample Date/Time: 13-MAR-96 1020
Received Date: 14-MAR-96

Parameter:	Units:	Results:	Rpt Lmts:	Q:
DIPHENYLAMINE	UG/KG	ND	400	
1,2-DIPHENYLHYDRAZINE	UG/KG	ND	400	
FLUORANTHENE	UG/KG	ND	400	
FLUORENE	UG/KG	ND	400	
HEXACHLOROBENZENE	UG/KG	ND	400	
HEXACHLOROBUTADIENE	UG/KG	ND	400	
HEXACHLOROCYCLOPENTADIENE	UG/KG	ND	400	
HEXACHLOROETHANE	UG/KG	ND	400	
INDENO(1,2,3-cd)PYRENE	UG/KG	ND	400	
ISOPHORONE	UG/KG	ND	400	
3-METHYLCHOLANTHRENE	UG/KG	ND	400	
2-METHYLNAPHTHALENE	UG/KG	ND	400	
NAPHTHALENE	UG/KG	ND	400	
1-NAPHTHYLAMINE	UG/KG	ND	400	
2-NAPHTHYLAMINE	UG/KG	ND	400	
2-NITROANILINE	UG/KG	ND	400	
3-NITROANILINE	UG/KG	ND	400	
4-NITROANILINE	UG/KG	ND	400	
NITROBENZENE	UG/KG	ND	400	
N-NITROSODIMETHYLAMINE	UG/KG	ND	400	
N-NITROSODI-N-BUTYLAMINE	UG/KG	ND	400	
N-NITROSODIPHENYLAMINE	UG/KG	ND	400	
N-NITROSO-DI-N-PROPYLAMINE	UG/KG	ND	400	
N-NITROSOPIPERIDINE	UG/KG	ND	400	
PENTACHLOROBENZENE	UG/KG	ND	400	
PENTACHLORONITROBENZENE (PCNB)	UG/KG	ND	400	
PHENACETIN	UG/KG	ND	400	
PHENANTHRENE	UG/KG	ND	400	
2-PICOLINE	UG/KG	ND	400	
PRONAMIDE	UG/KG	ND	400	
PYRENE	UG/KG	ND	400	
1,2,4,5-TETRACHLOROBENZENE	UG/KG	ND	400	
1,2,4 TRICHLOROBENZENE	UG/KG	ND	400	
2-FLUOROBIPHENYL	%REC/SURR	67	30-115	
NITROBENZENE-D5	%REC/SURR	54	23-120	
TERPHENYL-D14	%REC/SURR	76	18-137	
ANALYST	INITIALS	PL		

Comments:

"FINAL REPORT FORMAT - SINGLE"

Accession: 603254
Client: CSX TRANSPORTATION
Project Number: 4365B
Project Name: CSX GREENVILLE
Project Location: GREENVILLE, SC
Test: BN EXTRACTABLES (8270)
Analysis Method: 8270 / SW-846, 3rd Edition, September 1986 and Rev. 1, July 1992.
Extraction Method: 3550 / SW-846, 3rd Edition, September 1986 and Rev. 1, July 1992.
Matrix: SOIL
QC Level: II

Lab Id: 013 Sample Date/Time: 13-MAR-96 1305
Client Sample Id: NB1 Received Date: 14-MAR-96

Batch: ALS021 Extraction Date: 19-MAR-96
Blank: A Dry Weight %: 85 Analysis Date: 29-MAR-96

Parameter:	Units:	Results:	Rpt Lmts:	Q:
ACENAPHTHENE	UG/KG	ND	390	
ACENAPHTHYLENE	UG/KG	ND	390	
ACETOPHENONE	UG/KG	ND	390	
4-AMINOBIPHENYL	UG/KG	ND	390	
ANILINE	UG/KG	ND	390	
ANTHRACENE	UG/KG	ND	390	
BENZIDINE	UG/KG	ND	390	
BENZO(a)ANTHRACENE	UG/KG	780	390	
BENZO(a)PYRENE	UG/KG	600	390	
BENZO(b)FLUORANTHENE	UG/KG	670	390	
BENZO(g,h,i)PERYLENE	UG/KG	490	390	
BENZO(k)FLUORANTHENE	UG/KG	630	390	
BENZYL ALCOHOL	UG/KG	ND	390	
BIS(2-CHLOROETHYL)ETHER	UG/KG	ND	390	
BIS(2-CHLOROETHOXY)METHANE	UG/KG	ND	390	
BIS(2-CHLOROISOPROPYL)ETHER	UG/KG	ND	390	
BIS(2-ETHYLHEXYL)PHTHALATE	UG/KG	ND	390	
4-BROMOPHENYL-PHENYLETHER	UG/KG	ND	390	
BUTYLBENZYLPHTHALATE	UG/KG	ND	390	
4-CHLOROANILINE	UG/KG	ND	390	
1-CHLORONAPHTHALENE	UG/KG	ND	390	
2-CHLORONAPHTHALENE	UG/KG	ND	390	
4-CHLOROPHENYL-PHENYLETHER	UG/KG	ND	390	
CHRYSENE	UG/KG	890	390	
DIBENZO(A,H)ANTHRACENE	UG/KG	ND	390	
DIBENZ(A,J)ACRIDINE	UG/KG	ND	390	
DIBENZOFURAN	UG/KG	ND	390	
1,2-DICHLOROBENZENE	UG/KG	ND	390	
1,3-DICHLOROBENZENE	UG/KG	ND	390	
1,4-DICHLOROBENZENE	UG/KG	ND	390	
3,3'-DICHLOROBENZIDINE	UG/KG	ND	1900	
DIETHYLPHTHALATE	UG/KG	ND	390	
P-DIMETHYLAMINOAZOBENZENE	UG/KG	ND	390	
7,12-DIMETHYLBENZO(a)ANTHRACENE	UG/KG	ND	390	
A-,A-DIMETHYLPHENETHYLAMINE	UG/KG	ND	390	
DIMETHYLPHTHALATE	UG/KG	ND	390	
DI-N-BUTYLPHTHALATE	UG/KG	ND	390	
2,4-DINITROTOLUENE	UG/KG	ND	390	
2,6-DINITROTOLUENE	UG/KG	ND	390	
DI-N-OCTYLPHTHALATE	UG/KG	ND	390	

"FINAL REPORT FORMAT - SINGLE"

Accession: 603254
Client: CSX TRANSPORTATION
Project Number: 4365B
Project Name: CSX GREENVILLE
Project Location: GREENVILLE, SC
Test: BN EXTRACTABLES (8270)
Analysis Method: 8270 / SW-846, 3rd Edition, September 1986 and Rev. 1, July 1992.
Extraction Method: 3550 / SW-846, 3rd Edition, September 1986 and Rev. 1, July 1992.
Matrix: SOIL
QC Level: II

Lab Id: 013
Client Sample Id: NB1
Sample Date/Time: 13-MAR-96 1305
Received Date: 14-MAR-96

Parameter:	Units:	Results:	Rpt Lmts:	Q:
DIPHENYLAMINE	UG/KG	ND	390	
1,2-DIPHENYLHYDRAZINE	UG/KG	ND	390	
FLUORANTHENE	UG/KG	2000	390	
FLUORENE	UG/KG	ND	390	
HEXACHLOROBENZENE	UG/KG	ND	390	
HEXACHLOROBUTADIENE	UG/KG	ND	390	
HEXACHLOROCYCLOPENTADIENE	UG/KG	ND	390	
HEXACHLOROETHANE	UG/KG	ND	390	
INDENO(1,2,3-cd)PYRENE	UG/KG	460	390	
ISOPHORONE	UG/KG	ND	390	
3-METHYLCHOLANTHRENE	UG/KG	ND	390	
2-METHYLNAPHTHALENE	UG/KG	ND	390	
NAPHTHALENE	UG/KG	ND	390	
1-NAPHTHYLAMINE	UG/KG	ND	390	
2-NAPHTHYLAMINE	UG/KG	ND	390	
2-NITROANILINE	UG/KG	ND	390	
3-NITROANILINE	UG/KG	ND	390	
4-NITROANILINE	UG/KG	ND	390	
NITROBENZENE	UG/KG	ND	390	
N-NITROSODIMETHYLAMINE	UG/KG	ND	390	
N-NITROSODI-N-BUTYLAMINE	UG/KG	ND	390	
N-NITROSODIPHENYLAMINE	UG/KG	ND	390	
N-NITROSO-DI-N-PROPYLAMINE	UG/KG	ND	390	
N-NITROSOPIPERIDINE	UG/KG	ND	390	
PENTACHLOROBENZENE	UG/KG	ND	390	
PENTACHLORONITROBENZENE (PCNB)	UG/KG	ND	390	
PHENACETIN	UG/KG	ND	390	
PHENANTHRENE	UG/KG	1800	390	
2-PICOLINE	UG/KG	ND	390	
PRONAMIDE	UG/KG	ND	390	
PYRENE	UG/KG	1700	390	
1,2,4,5-TETRACHLOROBENZENE	UG/KG	ND	390	
1,2,4 TRICHLOROBENZENE	UG/KG	ND	390	
2-FLUOROBIPHENYL	%REC/SURR	68	30-115	
NITROBENZENE-D5	%REC/SURR	65	23-120	
TERPHENYL-D14	%REC/SURR	84	18-137	
ANALYST	INITIALS	PL		

Comments:

ANALYTICAL TECHNOLOGIES, INC. 11 East Olive Road Pensacola, Florida 32514 (904) 474-1001

Analysis Report

Analysis: RCRA METALS

Accession:	603312
Client:	CSX TRANSPORTATION
Project Number:	4365B
Project Name:	GREENVILLE, SC
Project Location:	GREENVILLE, SC
Department:	METALS

ANALYTICAL TECHNOLOGIES, INC. 11 East Olive Road Pensacola, Florida 32514 (904) 474-1001

"FINAL REPORT FORMAT - SINGLE"

Accession: 603312
Client: CSX TRANSPORTATION
Project Number: 4365B
Project Name: GREENVILLE, SC
Project Location: GREENVILLE, SC
Test: RCRA METALS
Matrix: SOIL
QC Level: II

Lab Id: 001
Client Sample Id: LF-024-2
Sample Date/Time: 15-MAR-96 0930
Received Date: 18-MAR-96

Parameters:	Units:	Results:	Rpt Lmts:	Q:	Batch:	Analyst:
SILVER (6010)	MG/KG	ND	1		A6S032	JLH
ARSENIC (6010)	MG/KG	6	5		R6S032	JLH
BARIUM (6010)	MG/KG	190	1		B6S032	JLH
CADMIUM (6010)	MG/KG	ND	0.5		C6S032	JLH
CHROMIUM (6010)	MG/KG	42	1		H6S032	JLH
MERCURY (7471)	MG/KG	ND	0.1		M4S019	GJ
LEAD (6010)	MG/KG	21	5		P6S032	JLH
SELENIUM (6010)	MG/KG	ND	20	*	S6S032	JLH

Comments:

ANALYTICAL TECHNOLOGIES, INC. 11 East Olive Road Pensacola, Florida 32514 (904) 474-1001

Analysis Report

Analysis: SW 846 8260 TABLE SIX

Accession:	603312
Client:	CSX TRANSPORTATION
Project Number:	4365B
Project Name:	GREENVILLE, SC
Project Location:	GREENVILLE, SC
Department:	ORGANIC/MS

"FINAL REPORT FORMAT - SINGLE"

Accession: 603312
Client: CSX TRANSPORTATION
Project Number: 4365B
Project Name: GREENVILLE, SC
Project Location: GREENVILLE, SC
Test: SW 846 8260 TABLE SIX
Analysis Method: 8260 / SW-846, 3rd Edition, September 1986 and Rev. 1, July 1992.
Extraction Method: N/A
Matrix: SOIL
QC Level: II

Lab Id: 001
Client Sample Id: LF-024-2
Sample Date/Time: 15-MAR-96 0930
Received Date: 18-MAR-96

Batch: MAS027
Blank: A
Dry Weight %: 75
Extraction Date: N/A
Analysis Date: 25-MAR-96

Parameter:	Units:	Results:	Rpt Lmts:	Q:
BENZENE	UG/KG	ND	7	
BROMOBENZENE	UG/KG	ND	7	
BROMOCHLOROMETHANE	UG/KG	ND	7	
BROMODICHLOROMETHANE	UG/KG	ND	7	
BROMOFORM	UG/KG	ND	7	
BROMOMETHANE	UG/KG	ND	7	
CARBON TETRACHLORIDE	UG/KG	ND	7	
CHLOROBENZENE	UG/KG	ND	7	
CHLOROETHANE	UG/KG	ND	7	
CHLOROFORM	UG/KG	ND	7	
CHLOROMETHANE	UG/KG	ND	7	
2-CHLOROTOLUENE	UG/KG	ND	7	
4-CHLOROTOLUENE	UG/KG	ND	7	
CIS 1,2 DICHLOROETHYLENE	UG/KG	ND	7	
CHLORODIBROMOMETHANE	UG/KG	ND	7	
DIBROMOMETHANE	UG/KG	ND	7	
1,4-DICHLOROBENZENE	UG/KG	ND	7	
1,3-DICHLOROBENZENE	UG/KG	ND	7	
1,2-DICHLOROBENZENE	UG/KG	ND	7	
DICHLORODIFLUOROMETHANE	UG/KG	ND	7	
1,1-DICHLOROETHANE	UG/KG	ND	7	
1,2-DICHLOROETHANE	UG/KG	ND	7	
1,1-DICHLOROETHENE	UG/KG	ND	7	
1,3 DICHLOROPROPANE	UG/KG	ND	7	
2,2-DICHLOROPROPANE	UG/KG	ND	7	
1,2-DICHLOROPROPANE	UG/KG	ND	7	
CIS-1,3-DICHLOROPROPENE	UG/KG	ND	7	
TRANS-1,3-DICHLOROPROPENE	UG/KG	ND	7	
1,1 DICHLOROPROPENE	UG/KG	ND	7	
ETHYL BENZENE	UG/KG	ND	7	
HEXACHLOROBUTADIENE	UG/KG	ND	7	
ISOPROPYL BENZENE	UG/KG	ND	7	
P-ISOPROPYLTOLUENE	UG/KG	ND	7	
METHYLENE CHLORIDE	UG/KG	ND	7	
NAPHTHALENE	UG/KG	ND	7	
N-BUTYL BENZENE	UG/KG	ND	7	
N-PROPYL BENZENE	UG/KG	ND	7	
SEC-BUTYL BENZENE	UG/KG	ND	7	
STYRENE	UG/KG	ND	7	
TERT-BUTYL BENZENE	UG/KG	ND	7	

"FINAL REPORT FORMAT - SINGLE"

Accession: 603312
Client: CSX TRANSPORTATION
Project Number: 4365B
Project Name: GREENVILLE, SC
Project Location: GREENVILLE, SC
Test: SW 846 8260 TABLE SIX
Analysis Method: 8260 / SW-846, 3rd Edition, September 1986 and Rev. 1, July 1992.
Extraction Method: N/A
Matrix: SOIL
QC Level: II

Lab Id: 001
Client Sample Id: LF-024-2
Sample Date/Time: 15-MAR-96 0930
Received Date: 18-MAR-96

Parameter:	Units:	Results:	Rpt Lmts:	Q:
1,1,1,2-TETRACHLOROETHANE	UG/KG	ND	7	
1,1,2,2-TETRACHLOROETHANE	UG/KG	ND	7	
TETRACHLOROETHENE	UG/KG	ND	7	
TOLUENE	UG/KG	ND	7	
TRANS 1,2 DICHLOROETHYLENE	UG/KG	ND	7	
1,1,1-TRICHLOROETHANE	UG/KG	ND	7	
1,1,2-TRICHLOROETHANE	UG/KG	ND	7	
1,2,3 TRICHLOROBENZENE	UG/KG	ND	7	
1,2,4 TRICHLOROBENZENE	UG/KG	ND	7	
TRICHLOROETHENE	UG/KG	ND	7	
TRICHLOROFLUOROMETHANE	UG/KG	ND	7	
1,2,3 TRICHLOROPROPANE	UG/KG	ND	7	
1,2,4-TRIMETHYLBENZENE	UG/KG	ND	7	
1,3,5-TRIMETHYLBENZENE	UG/KG	ND	7	
VINYL CHLORIDE	UG/KG	ND	7	
M,P-XYLENE	UG/KG	ND	7	
O-XYLENE	UG/KG	ND	7	
HEPTANE	UG/KG	ND	7	
ISOPROPYL ACETATE	UG/KG	ND	27	
METHYL CYCLOHEXANE	UG/KG	ND	13	
PROPYL ACETATE	UG/KG	ND	27	
DIBROMOFLUOROMETHANE	%REC/SURR	104	80-120	
TOLUENE-D8	%REC/SURR	103	81-117	
BROMOFLUOROBENZENE	%REC/SURR	126*	74-121	
ANALYST	INITIALS	LL		

Comments:
* SURROGATE RECOVERY OUTSIDE ACCEPTANCE LIMITS DUE TO MATRIX INTERFERENCE.

"FINAL REPORT FORMAT - SINGLE"

Accession: 603312
Client: CSX TRANSPORTATION
Project Number: 4365B
Project Name: GREENVILLE, SC
Project Location: GREENVILLE, SC
Test: SW 846 8260 TABLE SIX
Analysis Method: 8260 / SW-846, 3rd Edition, September 1986 and Rev. 1, July 1992.
Extraction Method: N/A
Matrix: GROUNDWATER
QC Level: II

Lab Id: 005 Sample Date/Time: 15-MAR-96 1030
Client Sample Id: G-TANK 1 Received Date: 18-MAR-96

Batch: MAW027 Extraction Date: N/A
Blank: A Dry Weight %: N/A Analysis Date: 25-MAR-96

Parameter:	Units:	Results:	Rpt Lmts:	Q:
BENZENE	UG/L	ND	5	
BROMOBENZENE	UG/L	ND	5	
BROMOCHLOROMETHANE	UG/L	ND	5	
BROMODICHLOROMETHANE	UG/L	ND	5	
BROMOFORM	UG/L	ND	5	
BROMOMETHANE	UG/L	ND	5	
CARBON TETRACHLORIDE	UG/L	ND	5	
CHLOROBENZENE	UG/L	ND	5	
CHLOROETHANE	UG/L	22	5	
CHLOROFORM	UG/L	ND	5	
CHLOROMETHANE	UG/L	ND	5	
2-CHLOROTOLUENE	UG/L	ND	5	
4-CHLOROTOLUENE	UG/L	ND	5	
CIS 1,2 DICHLOROETHYLENE	UG/L	ND	5	
CHLORODIBROMOMETHANE	UG/L	ND	5	
DIBROMOMETHANE	UG/L	ND	5	
1,4-DICHLOROBENZENE	UG/L	ND	5	
1,3-DICHLOROBENZENE	UG/L	ND	5	
1,2-DICHLOROBENZENE	UG/L	ND	5	
DICHLORODIFLUOROMETHANE	UG/L	ND	5	
1,1-DICHLOROETHANE	UG/L	15	5	
1,2-DICHLOROETHANE	UG/L	ND	5	
1,1-DICHLOROETHENE	UG/L	ND	5	
1,3 DICHLOROPROPANE	UG/L	ND	5	
2,2-DICHLOROPROPANE	UG/L	ND	5	
1,2-DICHLOROPROPANE	UG/L	ND	5	
CIS-1,3-DICHLOROPROPENE	UG/L	ND	5	
TRANS-1,3-DICHLOROPROPENE	UG/L	ND	5	
1,1 DICHLOROPROPENE	UG/L	ND	5	
ETHYL BENZENE	UG/L	ND	5	
HEXACHLOROBUTADIENE	UG/L	ND	5	
ISOPROPYL BENZENE	UG/L	ND	5	
P-ISOPROPYLTOLUENE	UG/L	ND	5	
METHYLENE CHLORIDE	UG/L	ND	5	
NAPHTHALENE	UG/L	ND	5	
N-BUTYL BENZENE	UG/L	ND	5	
N-PROPYL BENZENE	UG/L	ND	5	
SEC-BUTYL BENZENE	UG/L	ND	5	
STYRENE	UG/L	ND	5	
TERT-BUTYL BENZENE	UG/L	ND	5	

ANALYTICAL TECHNOLOGIES, INC. 11 East Olive Road Pensacola, Florida 32514 (904) 474-1001

"FINAL REPORT FORMAT - SINGLE"

Accession: 603312
Client: CSX TRANSPORTATION
Project Number: 4365B
Project Name: GREENVILLE, SC
Project Location: GREENVILLE, SC
Test: SW 846 8260 TABLE SIX
Analysis Method: 8260 / SW-846, 3rd Edition, September 1986 and Rev. 1, July 1992.
Extraction Method: N/A
Matrix: GROUNDWATER
QC Level: II

Lab Id: 005
Client Sample Id: G-TANK 1
Sample Date/Time: 15-MAR-96 1030
Received Date: 18-MAR-96

Parameter:	Units:	Results:	Rpt Lmts:	Q:
1,1,1,2-TETRACHLOROETHANE	UG/L	ND	5	
1,1,2,2-TETRACHLOROETHANE	UG/L	ND	5	
TETRACHLOROETHENE	UG/L	ND	5	
TOLUENE	UG/L	ND	5	
TRANS 1,2 DICHLOROETHYLENE	UG/L	ND	5	
1,1,1-TRICHLOROETHANE	UG/L	ND	5	
1,1,2-TRICHLOROETHANE	UG/L	ND	5	
1,2,3 TRICHLOROBENZENE	UG/L	ND	5	
1,2,4 TRICHLOROBENZENE	UG/L	ND	5	
TRICHLOROETHENE	UG/L	ND	5	
TRICHLOROFLUOROMETHANE	UG/L	ND	5	
1,2,3 TRICHLOROPROPANE	UG/L	ND	5	
1,2,4-TRIMETHYLBENZENE	UG/L	ND	5	
1,3,5-TRIMETHYLBENZENE	UG/L	ND	5	
VINYL CHLORIDE	UG/L	ND	5	
M,P-XYLENE	UG/L	11	5	
O-XYLENE	UG/L	7	5	
DIBROMOFLUOROMETHANE	%REC/SURR	101	74-124	
TOLUENE-D8	%REC/SURR	104	61-128	
BROMOFLUOROBENZENE	%REC/SURR	104	65-138	
ANALYST	INITIALS	LL		

Comments:

"FINAL REPORT FORMAT - SINGLE"

Accession: 603312
Client: CSX TRANSPORTATION
Project Number: 4365B
Project Name: GREENVILLE, SC
Project Location: GREENVILLE, SC
Test: SW 846 8260 TABLE SIX
Analysis Method: 8260 / SW-846, 3rd Edition, September 1986 and Rev. 1, July 1992.
Extraction Method: N/A
Matrix: SOIL
QC Level: II

Lab Id: 002
Client Sample Id: WW-10
Sample Date/Time: 15-MAR-96 1115
Received Date: 18-MAR-96

Batch: MAS027
Blank: A
Dry Weight %: 70
Extraction Date: N/A
Analysis Date: 25-MAR-96

Parameter:	Units:	Results:	Rpt Lmts:	Q:
BENZENE	UG/KG	ND	7	
BROMOBENZENE	UG/KG	ND	7	
BROMOCHLOROMETHANE	UG/KG	ND	7	
BROMODICHLOROMETHANE	UG/KG	ND	7	
BROMOFORM	UG/KG	ND	7	
BROMOMETHANE	UG/KG	ND	7	
CARBON TETRACHLORIDE	UG/KG	ND	7	
CHLOROBENZENE	UG/KG	ND	7	
CHLOROETHANE	UG/KG	ND	7	
CHLOROFORM	UG/KG	ND	7	
CHLOROMETHANE	UG/KG	ND	7	
2-CHLOROTOLUENE	UG/KG	ND	7	
4-CHLOROTOLUENE	UG/KG	ND	7	
CIS 1,2 DICHLOROETHYLENE	UG/KG	ND	7	
CHLORODIBROMOMETHANE	UG/KG	ND	7	
DIBROMOMETHANE	UG/KG	ND	7	
1,4-DICHLOROBENZENE	UG/KG	ND	7	
1,3-DICHLOROBENZENE	UG/KG	ND	7	
1,2-DICHLOROBENZENE	UG/KG	ND	7	
DICHLORODIFLUOROMETHANE	UG/KG	ND	7	
1,1-DICHLOROETHANE	UG/KG	ND	7	
1,2-DICHLOROETHANE	UG/KG	ND	7	
1,1-DICHLOROETHENE	UG/KG	ND	7	
1,3 DICHLOROPROPANE	UG/KG	ND	7	
2,2-DICHLOROPROPANE	UG/KG	ND	7	
1,2-DICHLOROPROPANE	UG/KG	ND	7	
CIS-1,3-DICHLOROPROPENE	UG/KG	ND	7	
TRANS-1,3-DICHLOROPROPENE	UG/KG	ND	7	
1,1 DICHLOROPROPENE	UG/KG	ND	7	
ETHYL BENZENE	UG/KG	ND	7	
HEXACHLOROBUTADIENE	UG/KG	ND	7	
ISOPROPYL BENZENE	UG/KG	ND	7	
P-ISOPROPYLTOLUENE	UG/KG	ND	7	
METHYLENE CHLORIDE	UG/KG	ND	7	
NAPHTHALENE	UG/KG	130	7	
N-BUTYL BENZENE	UG/KG	ND	7	
N-PROPYL BENZENE	UG/KG	ND	7	
SEC-BUTYL BENZENE	UG/KG	ND	7	
STYRENE	UG/KG	ND	7	
TERT-BUTYL BENZENE	UG/KG	ND	7	

"FINAL REPORT FORMAT - SINGLE"

Accession: 603312
Client: CSX TRANSPORTATION
Project Number: 4365B
Project Name: GREENVILLE, SC
Project Location: GREENVILLE, SC
Test: SW 846 8260 TABLE SIX
Analysis Method: 8260 / SW-846, 3rd Edition, September 1986 and Rev. 1, July 1992.
Extraction Method: N/A
Matrix: SOIL
QC Level: II

Lab Id: 002
Client Sample Id: WW-10
Sample Date/Time: 15-MAR-96 1115
Received Date: 18-MAR-96

Parameter:	Units:	Results:	Rpt Lmts:	Q:
1,1,1,2-TETRACHLOROETHANE	UG/KG	ND	7	
1,1,2,2-TETRACHLOROETHANE	UG/KG	ND	7	
TETRACHLOROETHENE	UG/KG	ND	7	
TOLUENE	UG/KG	ND	7	
TRANS 1,2 DICHLOROETHYLENE	UG/KG	ND	7	
1,1,1-TRICHLOROETHANE	UG/KG	ND	7	
1,1,2-TRICHLOROETHANE	UG/KG	ND	7	
1,2,3 TRICHLOROBENZENE	UG/KG	ND	7	
1,2,4 TRICHLOROBENZENE	UG/KG	ND	7	
TRICHLOROETHENE	UG/KG	ND	7	
TRICHLOROFLUOROMETHANE	UG/KG	ND	7	
1,2,3 TRICHLOROPROPANE	UG/KG	ND	7	
1,2,4-TRIMETHYLBENZENE	UG/KG	ND	7	
1,3,5-TRIMETHYLBENZENE	UG/KG	ND	7	
VINYL CHLORIDE	UG/KG	ND	7	
M,P-XYLENE	UG/KG	ND	7	
O-XYLENE	UG/KG	ND	7	
HEPTANE	UG/KG	ND	7	
ISOPROPYL ACETATE	UG/KG	ND	29	
METHYL CYCLOHEXANE	UG/KG	ND	14	
PROPYL ACETATE	UG/KG	ND	29	
DIBROMOFLUOROMETHANE	%REC/SURR	96	80-120	
TOLUENE-D8	%REC/SURR	103	81-117	
BROMOFLUOROBENZENE	%REC/SURR	114	74-121	
ANALYST	INITIALS	LL		

Comments:

"FINAL REPORT FORMAT - SINGLE"

Accession: 603312
Client: CSX TRANSPORTATION
Project Number: 4365B
Project Name: GREENVILLE, SC
Project Location: GREENVILLE, SC
Test: SW 846 8260 TABLE SIX
Analysis Method: 8260 / SW-846, 3rd Edition, September 1986 and Rev. 1, July 1992.
Extraction Method: N/A
Matrix: SOIL
QC Level: II

Lab Id: 003
Client Sample Id: WW-11
Sample Date/Time: 15-MAR-96 1200
Received Date: 18-MAR-96

Batch: MAS027
Blank: A
Dry Weight %: 32
Extraction Date: N/A
Analysis Date: 26-MAR-96

Parameter:	Units:	Results:	Rpt Lmts:	Q:
BENZENE	UG/KG	ND	20	
BROMOBENZENE	UG/KG	ND	20	
BROMOCHLOROMETHANE	UG/KG	ND	20	
BROMODICHLOROMETHANE	UG/KG	ND	20	
BROMOFORM	UG/KG	ND	20	
BROMOMETHANE	UG/KG	ND	20	
CARBON TETRACHLORIDE	UG/KG	ND	20	
CHLOROBENZENE	UG/KG	ND	20	
CHLOROETHANE	UG/KG	ND	20	
CHLOROFORM	UG/KG	ND	20	
CHLOROMETHANE	UG/KG	ND	20	
2-CHLOROTOLUENE	UG/KG	ND	20	
4-CHLOROTOLUENE	UG/KG	ND	20	
CIS 1,2 DICHLOROETHYLENE	UG/KG	ND	20	
CHLORODIBROMOMETHANE	UG/KG	ND	20	
DIBROMOMETHANE	UG/KG	ND	20	
1,4-DICHLOROBENZENE	UG/KG	ND	20	
1,3-DICHLOROBENZENE	UG/KG	ND	20	
1,2-DICHLOROBENZENE	UG/KG	ND	20	
DICHLORODIFLUOROMETHANE	UG/KG	ND	20	
1,1-DICHLOROETHANE	UG/KG	ND	20	
1,2-DICHLOROETHANE	UG/KG	ND	20	
1,1-DICHLOROETHENE	UG/KG	ND	20	
1,3 DICHLOROPROPANE	UG/KG	ND	20	
2,2-DICHLOROPROPANE	UG/KG	ND	20	
1,2-DICHLOROPROPANE	UG/KG	ND	20	
CIS-1,3-DICHLOROPROPENE	UG/KG	ND	20	
TRANS-1,3-DICHLOROPROPENE	UG/KG	ND	20	
1,1 DICHLOROPROPENE	UG/KG	ND	20	
ETHYL BENZENE	UG/KG	ND	20	
HEXACHLOROBUTADIENE	UG/KG	ND	20	
ISOPROPYL BENZENE	UG/KG	ND	20	
P-ISOPROPYLTOLUENE	UG/KG	ND	20	
METHYLENE CHLORIDE	UG/KG	ND	20	
NAPHTHALENE	UG/KG	ND	20	
N-BUTYL BENZENE	UG/KG	ND	20	
N-PROPYL BENZENE	UG/KG	ND	20	
SEC-BUTYL BENZENE	UG/KG	ND	20	
STYRENE	UG/KG	ND	20	
TERT-BUTYL BENZENE	UG/KG	ND	20	

"FINAL REPORT FORMAT - SINGLE"

Accession: 603312
Client: CSX TRANSPORTATION
Project Number: 4365B
Project Name: GREENVILLE, SC
Project Location: GREENVILLE, SC
Test: SW 846 8260 TABLE SIX
Analysis Method: 8260 / SW-846, 3rd Edition, September 1986 and Rev. 1, July 1992.
Extraction Method: N/A
Matrix: SOIL
QC Level: II

Lab Id: 003
Client Sample Id: WW-11
Sample Date/Time: 15-MAR-96 1200
Received Date: 18-MAR-96

Parameter:	Units:	Results:	Rpt Lmts:	Q:
1,1,1,2-TETRACHLOROETHANE	UG/KG	ND	20	
1,1,2,2-TETRACHLOROETHANE	UG/KG	ND	20	
TETRACHLOROETHENE	UG/KG	ND	20	
TOLUENE	UG/KG	ND	20	
TRANS 1,2 DICHLOROETHYLENE	UG/KG	ND	20	
1,1,1-TRICHLOROETHANE	UG/KG	ND	20	
1,1,2-TRICHLOROETHANE	UG/KG	ND	20	
1,2,3 TRICHLOROBENZENE	UG/KG	ND	20	
1,2,4 TRICHLOROBENZENE	UG/KG	ND	20	
TRICHLOROETHENE	UG/KG	ND	20	
TRICHLOROFLUOROMETHANE	UG/KG	ND	20	
1,2,3 TRICHLOROPROPANE	UG/KG	ND	20	
1,2,4-TRIMETHYLBENZENE	UG/KG	ND	20	
1,3,5-TRIMETHYLBENZENE	UG/KG	ND	20	
VINYL CHLORIDE	UG/KG	ND	20	
M,P-XYLENE	UG/KG	ND	20	
O-XYLENE	UG/KG	ND	20	
HEPTANE	UG/KG	ND	20	
ISOPROPYL ACETATE	UG/KG	ND	63	
METHYL CYCLOHEXANE	UG/KG	ND	31	
PROPYL ACETATE	UG/KG	ND	63	
DIBROMOFLUOROMETHANE	%REC/SURR	90	80-120	
TOLUENE-D8	%REC/SURR	95	81-117	
BROMOFLUOROBENZENE	%REC/SURR	159*	74-121	
ANALYST	INITIALS	LL		

Comments:
* SURROGATE RECOVERY OUTSIDE ACCEPTANCE LIMITS DUE TO MATRIX INTERFERENCE.

"FINAL REPORT FORMAT - SINGLE"

Accession: 603312
Client: CSX TRANSPORTATION
Project Number: 4365B
Project Name: GREENVILLE, SC
Project Location: GREENVILLE, SC
Test: SW 846 8260 TABLE SIX
Analysis Method: 8260 / SW-846, 3rd Edition, September 1986 and Rev. 1, July 1992.
Extraction Method: N/A
Matrix: SOIL
QC Level: II

Lab Id: 004
Client Sample Id: WW-12
Sample Date/Time: 15-MAR-96 1145
Received Date: 18-MAR-96

Batch: MAS027
Blank: A
Dry Weight %: 57
Extraction Date: N/A
Analysis Date: 26-MAR-96

Parameter:	Units:	Results:	Rpt Lmts:	Q:
BENZENE	UG/KG	ND	9	
BROMOBENZENE	UG/KG	ND	9	
BROMOCHLOROMETHANE	UG/KG	ND	9	
BROMODICHLOROMETHANE	UG/KG	ND	9	
BROMOFORM	UG/KG	ND	9	
BROMOMETHANE	UG/KG	ND	9	
CARBON TETRACHLORIDE	UG/KG	ND	9	
CHLOROBENZENE	UG/KG	ND	9	
CHLOROETHANE	UG/KG	ND	9	
CHLOROFORM	UG/KG	ND	9	
CHLOROMETHANE	UG/KG	ND	9	
2-CHLOROTOLUENE	UG/KG	ND	9	
4-CHLOROTOLUENE	UG/KG	ND	9	
CIS 1,2 DICHLOROETHYLENE	UG/KG	ND	9	
CHLORODIBROMOMETHANE	UG/KG	ND	9	
DIBROMOMETHANE	UG/KG	ND	9	
1,4-DICHLOROBENZENE	UG/KG	ND	9	
1,3-DICHLOROBENZENE	UG/KG	ND	9	
1,2-DICHLOROBENZENE	UG/KG	ND	9	
DICHLORODIFLUOROMETHANE	UG/KG	ND	9	
1,1-DICHLOROETHANE	UG/KG	ND	9	
1,2-DICHLOROETHANE	UG/KG	ND	9	
1,1-DICHLOROETHENE	UG/KG	ND	9	
1,3 DICHLOROPROPANE	UG/KG	ND	9	
2,2-DICHLOROPROPANE	UG/KG	ND	9	
1,2-DICHLOROPROPANE	UG/KG	ND	9	
CIS-1,3-DICHLOROPROPENE	UG/KG	ND	9	
TRANS-1,3-DICHLOROPROPENE	UG/KG	ND	9	
1,1 DICHLOROPROPENE	UG/KG	ND	9	
ETHYL BENZENE	UG/KG	ND	9	
HEXACHLOROBUTADIENE	UG/KG	ND	9	
ISOPROPYL BENZENE	UG/KG	ND	9	
P-ISOPROPYLTOLUENE	UG/KG	ND	9	
METHYLENE CHLORIDE	UG/KG	ND	9	
NAPHTHALENE	UG/KG	ND	9	
N-BUTYL BENZENE	UG/KG	ND	9	
N-PROPYL BENZENE	UG/KG	ND	9	
SEC-BUTYL BENZENE	UG/KG	ND	9	
STYRENE	UG/KG	ND	9	
TERT-BUTYL BENZENE	UG/KG	ND	9	

"FINAL REPORT FORMAT - SINGLE"

Accession: 603312
Client: CSX TRANSPORTATION
Project Number: 4365B
Project Name: GREENVILLE, SC
Project Location: GREENVILLE, SC
Test: SW 846 8260 TABLE SIX
Analysis Method: 8260 / SW-846, 3rd Edition, September 1986 and Rev. 1, July 1992.
Extraction Method: N/A
Matrix: SOIL
QC Level: II

Lab Id: 004
Client Sample Id: WW-12
Sample Date/Time: 15-MAR-96 1145
Received Date: 18-MAR-96

Parameter:	Units:	Results:	Rpt Lmts:	Q:
1,1,1,2-TETRACHLOROETHANE	UG/KG	ND	9	
1,1,2,2-TETRACHLOROETHANE	UG/KG	ND	9	
TETRACHLOROETHENE	UG/KG	ND	9	
TOLUENE	UG/KG	ND	9	
TRANS 1,2 DICHLOROETHYLENE	UG/KG	ND	9	
1,1,1-TRICHLOROETHANE	UG/KG	ND	9	
1,1,2-TRICHLOROETHANE	UG/KG	ND	9	
1,2,3 TRICHLOROBENZENE	UG/KG	ND	9	
1,2,4 TRICHLOROBENZENE	UG/KG	ND	9	
TRICHLOROETHENE	UG/KG	ND	9	
TRICHLOROFLUOROMETHANE	UG/KG	ND	9	
1,2,3 TRICHLOROPROPANE	UG/KG	ND	9	
1,2,4-TRIMETHYLBENZENE	UG/KG	ND	9	
1,3,5-TRIMETHYLBENZENE	UG/KG	ND	9	
VINYL CHLORIDE	UG/KG	ND	9	
M,P-XYLENE	UG/KG	ND	9	
O-XYLENE	UG/KG	ND	9	
HEPTANE	UG/KG	ND	9	
ISOPROPYL ACETATE	UG/KG	ND	35	
METHYL CYCLOHEXANE	UG/KG	ND	18	
PROPYL ACETATE	UG/KG	ND	35	
DIBROMOFLUOROMETHANE	%REC/SURR	94	80-120	
TOLUENE-D8	%REC/SURR	92	81-117	
BROMOFLUOROBENZENE	%REC/SURR	140*	74-121	
ANALYST	INITIALS	LL		

Comments:
* SURROGATE RECOVERY OUTSIDE ACCEPTANCE LIMITS DUE TO MATRIX INTERFERENCE.

AMERICAN ENVIRONMENTAL NETWORK 11 East Olive Road Pensacola, Florida 32514 (904) 474-1001

"FINAL REPORT FORMAT - SINGLE"

Accession: 604535
Client: CSX TRANSPORTATION
Project Number: 4365B
Project Name: VAUGHN LANDFILL
Project Location: CSXT9415585
Test: SW 846 8260 TABLE SIX
Analysis Method: 8260 / SW-846, 3rd Edition, September 1986 and Rev. 1, July 1992.
Extraction Method: N/A
Matrix: SOIL
QC Level: II

Lab Id: 001
Client Sample Id: WW13
Sample Date/Time: 24-APR-96 1115
Received Date: 26-APR-96

Batch: MAS052
Blank: A
Dry Weight %: 56
Extraction Date: N/A
Analysis Date: 30-APR-96

Parameter:	Units:	Results:	Rpt Lmts:	Q:
BENZENE	UG/KG	ND	9	
BROMOBENZENE	UG/KG	ND	9	
BROMOCHLOROMETHANE	UG/KG	ND	9	
BROMODICHLOROMETHANE	UG/KG	ND	9	
BROMOFORM	UG/KG	ND	9	
BROMOMETHANE	UG/KG	ND	9	
CARBON TETRACHLORIDE	UG/KG	ND	9	
CHLOROBENZENE	UG/KG	ND	9	
CHLOROETHANE	UG/KG	ND	9	
CHLOROFORM	UG/KG	ND	9	
CHLOROMETHANE	UG/KG	ND	9	
2-CHLOROTOLUENE	UG/KG	ND	9	
4-CHLOROTOLUENE	UG/KG	ND	9	
CIS 1,2 DICHLOROETHYLENE	UG/KG	ND	9	
CHLORODIBROMOMETHANE	UG/KG	ND	9	
DIBROMOMETHANE	UG/KG	ND	9	
1,4-DICHLOROBENZENE	UG/KG	ND	9	
1,3-DICHLOROBENZENE	UG/KG	ND	9	
1,2-DICHLOROBENZENE	UG/KG	ND	9	
DICHLORODIFLUOROMETHANE	UG/KG	ND	9	
1,1-DICHLOROETHANE	UG/KG	ND	9	
1,2-DICHLOROETHANE	UG/KG	ND	9	
1,1-DICHLOROETHENE	UG/KG	ND	9	
1,3 DICHLOROPROPANE	UG/KG	ND	9	
2,2-DICHLOROPROPANE	UG/KG	ND	9	
1,2-DICHLOROPROPANE	UG/KG	ND	9	
CIS-1,3-DICHLOROPROPENE	UG/KG	ND	9	
TRANS-1,3-DICHLOROPROPENE	UG/KG	ND	9	
1,1 DICHLOROPROPENE	UG/KG	ND	9	
ETHYL BENZENE	UG/KG	ND	9	
HEXACHLOROBUTADIENE	UG/KG	ND	9	
ISOPROPYL BENZENE	UG/KG	ND	9	
P-ISOPROPYLTOLUENE	UG/KG	ND	9	
METHYLENE CHLORIDE	UG/KG	ND	9	
NAPHTHALENE	UG/KG	ND	9	
N-BUTYL BENZENE	UG/KG	ND	9	
N-PROPYL BENZENE	UG/KG	ND	9	
SEC-BUTYL BENZENE	UG/KG	ND	9	
STYRENE	UG/KG	ND	9	
TERT-BUTYL BENZENE	UG/KG	ND	9	

AMERICAN ENVIRONMENTAL NETWORK 11 East Olive Road Pensacola, Florida 32514 (904) 474-1001

"FINAL REPORT FORMAT - SINGLE"

Accession: 604535
Client: CSX TRANSPORTATION
Project Number: 4365B
Project Name: VAUGHN LANDFILL
Project Location: CSXT9415585
Test: SW 846 8260 TABLE SIX
Analysis Method: 8260 / SW-846, 3rd Edition, September 1986 and Rev. 1, July 1992.
Extraction Method: N/A
Matrix: SOIL
QC Level: II

Lab Id: 001
Client Sample Id: WW13
Sample Date/Time: 24-APR-96 1115
Received Date: 26-APR-96

Parameter:	Units:	Results:	Rpt Lmts:	Q:
1,1,1,2-TETRACHLOROETHANE	UG/KG	ND	9	
1,1,2,2-TETRACHLOROETHANE	UG/KG	ND	9	
TETRACHLOROETHENE	UG/KG	ND	9	
TOLUENE	UG/KG	ND	9	
TRANS 1,2 DICHLOROETHYLENE	UG/KG	ND	9	
1,1,1-TRICHLOROETHANE	UG/KG	ND	9	
1,1,2-TRICHLOROETHANE	UG/KG	ND	9	
1,2,3 TRICHLOROBENZENE	UG/KG	ND	9	
1,2,4 TRICHLOROBENZENE	UG/KG	ND	9	
TRICHLOROETHENE	UG/KG	ND	9	
TRICHLOROFLUOROMETHANE	UG/KG	ND	9	
1,2,3 TRICHLOROPROPANE	UG/KG	ND	9	
1,2,4-TRIMETHYLBENZENE	UG/KG	ND	9	
1,3,5-TRIMETHYLBENZENE	UG/KG	ND	9	
VINYL CHLORIDE	UG/KG	ND	9	
M,P-XYLENE	UG/KG	ND	9	
O-XYLENE	UG/KG	ND	9	
HEPTANE	UG/KG	ND	9	
ISOPROPYL ACETATE	UG/KG	ND	36	
METHYL CYCLOHEXANE	UG/KG	ND	18	
PROPYL ACETATE	UG/KG	ND	36	
DIBROMOFLUOROMETHANE	%REC/SURR	99	80-120	
TOLUENE-D8	%REC/SURR	101	81-117	
BROMOFLUOROBENZENE	%REC/SURR	116	74-121	
ANALYST	INITIALS	LL		

Comments:

ANALYTICAL TECHNOLOGIES, INC. 11 East Olive Road Pensacola, Florida 32514 (904) 474-1001

Analysis Report

Analysis: BN EXTRACTABLES (8270)

Accession:	603312
Client:	CSX TRANSPORTATION
Project Number:	4365B
Project Name:	GREENVILLE, SC
Project Location:	GREENVILLE, SC
Department:	ORGANIC/MS

"FINAL REPORT FORMAT - SINGLE"

Accession: 603312
Client: CSX TRANSPORTATION
Project Number: 4365B
Project Name: GREENVILLE, SC
Project Location: GREENVILLE, SC
Test: BN EXTRACTABLES (8270)
Analysis Method: 8270 / SW-846, 3rd Edition, September 1986 and Rev. 1, July 1992.
Extraction Method: 3550 / SW-846, 3rd Edition, September 1986 and Rev. 1, July 1992.
Matrix: SOIL
QC Level: II

Lab Id: 001
Client Sample Id: LF-024-2
Sample Date/Time: 15-MAR-96 0930
Received Date: 18-MAR-96

Batch: ALS021
Blank: A
Dry Weight %: 75
Extraction Date: 19-MAR-96
Analysis Date: 04-APR-96

Parameter:	Units:	Results:	Rpt Lmts:	Q:
ACENAPHTHENE	UG/KG	ND	440	
ACENAPHTHYLENE	UG/KG	ND	440	
ACETOPHENONE	UG/KG	ND	440	
4-AMINOBIPHENYL	UG/KG	ND	440	
ANILINE	UG/KG	ND	440	
ANTHRACENE	UG/KG	ND	440	
BENZIDINE	UG/KG	ND	440	
BENZO(a)ANTHRACENE	UG/KG	ND	440	
BENZO(a)PYRENE	UG/KG	ND	440	
BENZO(b)FLUORANTHENE	UG/KG	ND	440	
BENZO(g,h,i)PERYLENE	UG/KG	ND	440	
BENZO(k)FLUORANTHENE	UG/KG	ND	440	
BENZYL ALCOHOL	UG/KG	ND	440	
BIS(2-CHLOROETHYL)ETHER	UG/KG	ND	440	
BIS(2-CHLOROETHOXY)METHANE	UG/KG	ND	440	
BIS(2-CHLOROISOPROPYL)ETHER	UG/KG	ND	440	
BIS(2-ETHYLHEXYL)PHTHALATE	UG/KG	ND	440	
4-BROMOPHENYL-PHENYLETHER	UG/KG	ND	440	
BUTYLBENZYLPHTHALATE	UG/KG	ND	440	
4-CHLOROANILINE	UG/KG	ND	440	
1-CHLORONAPHTHALENE	UG/KG	ND	440	
2-CHLORONAPHTHALENE	UG/KG	ND	440	
4-CHLOROPHENYL-PHENYLETHER	UG/KG	ND	440	
CHRYSENE	UG/KG	ND	440	
DIBENZO(A,H)ANTHRACENE	UG/KG	ND	440	
DIBENZ(A,J)ACRIDINE	UG/KG	ND	440	
DIBENZOFURAN	UG/KG	ND	440	
1,2-DICHLOROBENZENE	UG/KG	ND	440	
1,3-DICHLOROBENZENE	UG/KG	ND	440	
1,4-DICHLOROBENZENE	UG/KG	ND	440	
3,3'-DICHLOROBENZIDINE	UG/KG	ND	2200	
DIETHYLPHTHALATE	UG/KG	ND	440	
P-DIMETHYLAMINOAZOBENZENE	UG/KG	ND	440	
7,12-DIMETHYLBENZO(a)ANTHRACENE	UG/KG	ND	440	
A-,A-DIMETHYLPHENETHYLAMINE	UG/KG	ND	440	
DIMETHYLPHTHALATE	UG/KG	ND	440	
DI-N-BUTYLPHTHALATE	UG/KG	ND	440	
2,4-DINITROTOLUENE	UG/KG	ND	440	
2,6-DINITROTOLUENE	UG/KG	ND	440	
DI-N-OCTYLPHTHALATE	UG/KG	ND	440	

"FINAL REPORT FORMAT - SINGLE"

Accession: 603312
Client: CSX TRANSPORTATION
Project Number: 4365B
Project Name: GREENVILLE, SC
Project Location: GREENVILLE, SC
Test: BN EXTRACTABLES (8270)
Analysis Method: 8270 / SW-846, 3rd Edition, September 1986 and Rev. 1, July 1992.
Extraction Method: 3550 / SW-846, 3rd Edition, September 1986 and Rev. 1, July 1992.
Matrix: SOIL
QC Level: II

Lab Id: 001
Client Sample Id: LF-024-2
Sample Date/Time: 15-MAR-96 0930
Received Date: 18-MAR-96

Parameter:	Units:	Results:	Rpt Lmts:	Q:
DIPHENYLAMINE	UG/KG	ND	440	
1,2-DIPHENYLHYDRAZINE	UG/KG	ND	440	
FLUORANTHENE	UG/KG	510	440	
FLUORENE	UG/KG	ND	440	
HEXACHLOROBENZENE	UG/KG	ND	440	
HEXACHLOROBUTADIENE	UG/KG	ND	440	
HEXACHLOROCYCLOPENTADIENE	UG/KG	ND	440	
HEXACHLOROETHANE	UG/KG	ND	440	
INDENO(1,2,3-cd)PYRENE	UG/KG	ND	440	
ISOPHORONE	UG/KG	ND	440	
3-METHYLCHOLANTHRENE	UG/KG	ND	440	
2-METHYLNAPHTHALENE	UG/KG	ND	440	
NAPHTHALENE	UG/KG	ND	440	
1-NAPHTHYLAMINE	UG/KG	ND	440	
2-NAPHTHYLAMINE	UG/KG	ND	440	
2-NITROANILINE	UG/KG	ND	440	
3-NITROANILINE	UG/KG	ND	440	
4-NITROANILINE	UG/KG	ND	440	
NITROBENZENE	UG/KG	ND	440	
N-NITROSODIMETHYLAMINE	UG/KG	ND	440	
N-NITROSODI-N-BUTYLAMINE	UG/KG	ND	440	
N-NITROSODIPHENYLAMINE	UG/KG	ND	440	
N-NITROSO-DI-N-PROPYLAMINE	UG/KG	ND	440	
N-NITROSOPIPERIDINE	UG/KG	ND	440	
PENTACHLOROBENZENE	UG/KG	ND	440	
PENTACHLORONITROBENZENE (PCNB)	UG/KG	ND	440	
PHENACETIN	UG/KG	ND	440	
PHENANTHRENE	UG/KG	470	440	
2-PICOLINE	UG/KG	ND	440	
PRONAMIDE	UG/KG	ND	440	
PYRENE	UG/KG	450	440	
1,2,4,5-TETRACHLOROBENZENE	UG/KG	ND	440	
1,2,4 TRICHLOROBENZENE	UG/KG	ND	440	
2-FLUOROBIPHENYL	%REC/SURR	70	30-115	
NITROBENZENE-D5	%REC/SURR	66	23-120	
TERPHENYL-D14	%REC/SURR	76	18-137	
ANALYST	INITIALS	PL		

Comments:

"FINAL REPORT FORMAT - SINGLE"

Accession: 603312
Client: CSX TRANSPORTATION
Project Number: 4365B
Project Name: GREENVILLE, SC
Project Location: GREENVILLE, SC
Test: BN EXTRACTABLES (8270)
Analysis Method: 8270 / SW-846, 3rd Edition, September 1986 and Rev. 1, July 1992.
Extraction Method: 3550 / SW-846, 3rd Edition, September 1986 and Rev. 1, July 1992.
Matrix: SOIL
QC Level: II

Lab Id: 002
Client Sample Id: WW-10
Sample Date/Time: 15-MAR-96 1115
Received Date: 18-MAR-96

Batch: ALS021
Blank: A
Dry Weight %: 70
Extraction Date: 19-MAR-96
Analysis Date: 04-APR-96

Parameter:	Units:	Results:	Rpt Lmts:	Q:
ACENAPHTHENE	UG/KG	ND	470	
ACENAPHTHYLENE	UG/KG	ND	470	
ACETOPHENONE	UG/KG	ND	470	
4-AMINOBIPHENYL	UG/KG	ND	470	
ANILINE	UG/KG	ND	470	
ANTHRACENE	UG/KG	ND	470	
BENZIDINE	UG/KG	ND	470	
BENZO(a)ANTHRACENE	UG/KG	2700	470	
BENZO(a)PYRENE	UG/KG	1900	470	
BENZO(b)FLUORANTHENE	UG/KG	3100	470	
BENZO(g,h,i)PERYLENE	UG/KG	2500	470	
BENZO(k)FLUORANTHENE	UG/KG	2300	470	
BENZYL ALCOHOL	UG/KG	ND	470	
BIS(2-CHLOROETHYL)ETHER	UG/KG	ND	470	
BIS(2-CHLOROETHOXY)METHANE	UG/KG	ND	470	
BIS(2-CHLOROISOPROPYL)ETHER	UG/KG	ND	470	
BIS(2-ETHYLHEXYL)PHTHALATE	UG/KG	ND	470	
4-BROMOPHENYL-PHENYLETHER	UG/KG	ND	470	
BUTYLBENZYLPHTHALATE	UG/KG	ND	470	
4-CHLOROANILINE	UG/KG	ND	470	
1-CHLORONAPHTHALENE	UG/KG	ND	470	
2-CHLORONAPHTHALENE	UG/KG	ND	470	
4-CHLOROPHENYL-PHENYLETHER	UG/KG	ND	470	
CHRYSENE	UG/KG	2800	470	
DIBENZO(A,H)ANTHRACENE	UG/KG	ND	470	
DIBENZ(A,J)ACRIDINE	UG/KG	ND	470	
DIBENZOFURAN	UG/KG	ND	470	
1,2-DICHLOROBENZENE	UG/KG	ND	470	
1,3-DICHLOROBENZENE	UG/KG	ND	470	
1,4-DICHLOROBENZENE	UG/KG	ND	470	
3,3'-DICHLOROBENZIDINE	UG/KG	ND	2400	
DIETHYLPHTHALATE	UG/KG	ND	470	
P-DIMETHYLAMINOAZOBENZENE	UG/KG	ND	470	
7,12-DIMETHYLBENZO(a)ANTHRACENE	UG/KG	ND	470	
A-,A-DIMETHYLPHENETHYLAMINE	UG/KG	ND	470	
DIMETHYLPHTHALATE	UG/KG	ND	470	
DI-N-BUTYLPHTHALATE	UG/KG	ND	470	
2,4-DINITROTOLUENE	UG/KG	ND	470	
2,6-DINITROTOLUENE	UG/KG	ND	470	
DI-N-OCTYLPHTHALATE	UG/KG	ND	470	

"FINAL REPORT FORMAT - SINGLE"

Accession: 603312
Client: CSX TRANSPORTATION
Project Number: 4365B
Project Name: GREENVILLE, SC
Project Location: GREENVILLE, SC
Test: BN EXTRACTABLES (8270)
Analysis Method: 8270 / SW-846, 3rd Edition, September 1986 and Rev. 1, July 1992.
Extraction Method: 3550 / SW-846, 3rd Edition, September 1986 and Rev. 1, July 1992.
Matrix: SOIL
QC Level: II

Lab Id: 002
Client Sample Id: WW-10
Sample Date/Time: 15-MAR-96 1115
Received Date: 18-MAR-96

Parameter:	Units:	Results:	Rpt Lmts:	Q:
DIPHENYLAMINE	UG/KG	ND	470	
1,2-DIPHENYLHYDRAZINE	UG/KG	ND	470	
FLUORANTHENE	UG/KG	4400	470	
FLUORENE	UG/KG	ND	470	
HEXACHLOROBENZENE	UG/KG	ND	470	
HEXACHLOROBUTADIENE	UG/KG	ND	470	
HEXACHLOROCYCLOPENTADIENE	UG/KG	ND	470	
HEXACHLOROETHANE	UG/KG	ND	470	
INDENO(1,2,3-cd)PYRENE	UG/KG	2100	470	
ISOPHORONE	UG/KG	ND	470	
3-METHYLCHOLANTHRENE	UG/KG	ND	470	
2-METHYLNAPHTHALENE	UG/KG	ND	470	
NAPHTHALENE	UG/KG	ND	470	
1-NAPHTHYLAMINE	UG/KG	ND	470	
2-NAPHTHYLAMINE	UG/KG	ND	470	
2-NITROANILINE	UG/KG	ND	470	
3-NITROANILINE	UG/KG	ND	470	
4-NITROANILINE	UG/KG	ND	470	
NITROBENZENE	UG/KG	ND	470	
N-NITROSODIMETHYLAMINE	UG/KG	ND	470	
N-NITROSODI-N-BUTYLAMINE	UG/KG	ND	470	
N-NITROSODIPHENYLAMINE	UG/KG	ND	470	
N-NITROSO-DI-N-PROPYLAMINE	UG/KG	ND	470	
N-NITROSOPIPERIDINE	UG/KG	ND	470	
PENTACHLOROBENZENE	UG/KG	ND	470	
PENTACHLORONITROBENZENE (PCNB)	UG/KG	ND	470	
PHENACETIN	UG/KG	ND	470	
PHENANTHRENE	UG/KG	1300	470	
2-PICOLINE	UG/KG	ND	470	
PRONAMIDE	UG/KG	ND	470	
PYRENE	UG/KG	4000	470	
1,2,4,5-TETRACHLOROBENZENE	UG/KG	ND	470	
1,2,4 TRICHLOROBENZENE	UG/KG	ND	470	
2-FLUOROBIPHENYL	%REC/SURR	66	30-115	
NITROBENZENE-D5	%REC/SURR	61	23-120	
TERPHENYL-D14	%REC/SURR	72	18-137	
ANALYST	INITIALS	PL		

Comments:

"FINAL REPORT FORMAT - SINGLE"

Accession: 603312
Client: CSX TRANSPORTATION
Project Number: 4365B
Project Name: GREENVILLE, SC
Project Location: GREENVILLE, SC
Test: BN EXTRACTABLES (8270)
Analysis Method: 8270 / SW-846, 3rd Edition, September 1986 and Rev. 1, July 1992.
Extraction Method: 3550 / SW-846, 3rd Edition, September 1986 and Rev. 1, July 1992.
Matrix: SOIL
QC Level: II

Lab Id: 003
Client Sample Id: WW-11
Sample Date/Time: 15-MAR-96 1200
Received Date: 18-MAR-96

Batch: ALS021
Blank: A
Dry Weight %: 32
Extraction Date: 19-MAR-96
Analysis Date: 08-APR-96

Parameter:	Units:	Results:	Rpt Lmts:	Q:
ACENAPHTHENE	UG/KG	ND	10000	
ACENAPHTHYLENE	UG/KG	ND	10000	
ACETOPHENONE	UG/KG	ND	10000	
4-AMINOBIPHENYL	UG/KG	ND	10000	
ANILINE	UG/KG	ND	10000	
ANTHRACENE	UG/KG	ND	10000	
BENZIDINE	UG/KG	ND	10000	
BENZO(a)ANTHRACENE	UG/KG	ND	10000	
BENZO(a)PYRENE	UG/KG	12000	10000	
BENZO(b)FLUORANTHENE	UG/KG	ND	10000	
BENZO(g,h,i)PERYLENE	UG/KG	ND	10000	
BENZO(k)FLUORANTHENE	UG/KG	ND	10000	
BENZYL ALCOHOL	UG/KG	ND	10000	
BIS(2-CHLOROETHYL)ETHER	UG/KG	ND	10000	
BIS(2-CHLOROETHOXY)METHANE	UG/KG	ND	10000	
BIS(2-CHLOROISOPROPYL)ETHER	UG/KG	ND	10000	
BIS(2-ETHYLHEXYL)PHTHALATE	UG/KG	ND	10000	
4-BROMOPHENYL-PHENYLETHER	UG/KG	ND	10000	
BUTYLBENZYLPHTHALATE	UG/KG	ND	10000	
4-CHLOROANILINE	UG/KG	ND	10000	
1-CHLORONAPHTHALENE	UG/KG	ND	10000	
2-CHLORONAPHTHALENE	UG/KG	ND	10000	
4-CHLOROPHENYL-PHENYLETHER	UG/KG	ND	10000	
CHRYSENE	UG/KG	11000	10000	
DIBENZO(A,H)ANTHRACENE	UG/KG	ND	10000	
DIBENZ(A,J)ACRIDINE	UG/KG	ND	10000	
DIBENZOFURAN	UG/KG	ND	10000	
1,2-DICHLOROBENZENE	UG/KG	ND	10000	
1,3-DICHLOROBENZENE	UG/KG	ND	10000	
1,4-DICHLOROBENZENE	UG/KG	ND	10000	
3,3'-DICHLOROBENZIDINE	UG/KG	ND	52000	
DIETHYLPHTHALATE	UG/KG	ND	10000	
P-DIMETHYLAMINOAZOBENZENE	UG/KG	ND	10000	
7,12-DIMETHYLBENZO(a)ANTHRACENE	UG/KG	ND	10000	
A-,A-DIMETHYLPHENETHYLAMINE	UG/KG	ND	10000	
DIMETHYLPHTHALATE	UG/KG	ND	10000	
DI-N-BUTYLPHTHALATE	UG/KG	ND	10000	
2,4-DINITROTOLUENE	UG/KG	ND	10000	
2,6-DINITROTOLUENE	UG/KG	ND	10000	
DI-N-OCTYLPHTHALATE	UG/KG	ND	10000	

"FINAL REPORT FORMAT - SINGLE"

Accession: 603312
Client: CSX TRANSPORTATION
Project Number: 4365B
Project Name: GREENVILLE, SC
Project Location: GREENVILLE, SC
Test: BN EXTRACTABLES (8270)
Analysis Method: 8270 / SW-846, 3rd Edition, September 1986 and Rev. 1, July 1992.
Extraction Method: 3550 / SW-846, 3rd Edition, September 1986 and Rev. 1, July 1992.
Matrix: SOIL
QC Level: II

Lab Id: 003
Client Sample Id: WW-11
Sample Date/Time: 15-MAR-96 1200
Received Date: 18-MAR-96

Parameter:	Units:	Results:	Rpt Lmts:	Q:
DIPHENYLAMINE	UG/KG	ND	10000	
1,2-DIPHENYLHYDRAZINE	UG/KG	ND	10000	
FLUORANTHENE	UG/KG	20000	10000	
FLUORENE	UG/KG	ND	10000	
HEXACHLOROBENZENE	UG/KG	ND	10000	
HEXACHLOROBUTADIENE	UG/KG	ND	10000	
HEXACHLOROCYCLOPENTADIENE	UG/KG	ND	10000	
HEXACHLOROETHANE	UG/KG	ND	10000	
INDENO(1,2,3-cd)PYRENE	UG/KG	ND	10000	
ISOPHORONE	UG/KG	ND	10000	
3-METHYLCHOLANTHRENE	UG/KG	ND	10000	
2-METHYLNAPHTHALENE	UG/KG	ND	10000	
NAPHTHALENE	UG/KG	ND	10000	
1-NAPHTHYLAMINE	UG/KG	ND	10000	
2-NAPHTHYLAMINE	UG/KG	ND	10000	
2-NITROANILINE	UG/KG	ND	10000	
3-NITROANILINE	UG/KG	ND	10000	
4-NITROANILINE	UG/KG	ND	10000	
NITROBENZENE	UG/KG	ND	10000	
N-NITROSODIMETHYLAMINE	UG/KG	ND	10000	
N-NITROSODI-N-BUTYLAMINE	UG/KG	ND	10000	
N-NITROSODIPHENYLAMINE	UG/KG	ND	10000	
N-NITROSO-DI-N-PROPYLAMINE	UG/KG	ND	10000	
N-NITROSOPIPERIDINE	UG/KG	ND	10000	
PENTACHLOROBENZENE	UG/KG	ND	10000	
PENTACHLORONITROBENZENE (PCNB)	UG/KG	ND	10000	
PHENACETIN	UG/KG	ND	10000	
PHENANTHRENE	UG/KG	ND	10000	
2-PICOLINE	UG/KG	ND	10000	
PRONAMIDE	UG/KG	ND	10000	
PYRENE	UG/KG	17000	10000	
1,2,4,5-TETRACHLOROBENZENE	UG/KG	ND	10000	
1,2,4 TRICHLOROBENZENE	UG/KG	ND	10000	
2-FLUOROBIPHENYL	%REC/SURR	94	30-115	
NITROBENZENE-D5	%REC/SURR	68	23-120	
TERPHENYL-D14	%REC/SURR	106	18-137	
ANALYST	INITIALS	PL		

Comments:

"FINAL REPORT FORMAT - SINGLE"

Accession: 603312
Client: CSX TRANSPORTATION
Project Number: 4365B
Project Name: GREENVILLE, SC
Project Location: GREENVILLE, SC
Test: BN EXTRACTABLES (8270)
Analysis Method: 8270 / SW-846, 3rd Edition, September 1986 and Rev. 1, July 1992.
Extraction Method: 3550 / SW-846, 3rd Edition, September 1986 and Rev. 1, July 1992.
Matrix: SOIL
QC Level: II

Lab Id: 004
Client Sample Id: WW-12
Sample Date/Time: 15-MAR-96 1145
Received Date: 18-MAR-96

Batch: ALS021
Blank: A
Dry Weight %: 57
Extraction Date: 19-MAR-96
Analysis Date: 08-APR-96

Parameter:	Units:	Results:	Rpt Lmts:	Q:
ACENAPHTHENE	UG/KG	ND	5800	
ACENAPHTHYLENE	UG/KG	ND	5800	
ACETOPHENONE	UG/KG	ND	5800	
4-AMINOBIPHENYL	UG/KG	ND	5800	
ANILINE	UG/KG	ND	5800	
ANTHRACENE	UG/KG	ND	5800	
BENZIDINE	UG/KG	ND	5800	
BENZO(a)ANTHRACENE	UG/KG	ND	5800	
BENZO(a)PYRENE	UG/KG	ND	5800	
BENZO(b)FLUORANTHENE	UG/KG	ND	5800	
BENZO(g,h,i)PERYLENE	UG/KG	ND	5800	
BENZO(k)FLUORANTHENE	UG/KG	ND	5800	
BENZYL ALCOHOL	UG/KG	ND	5800	
BIS(2-CHLOROETHYL)ETHER	UG/KG	ND	5800	
BIS(2-CHLOROETHOXY)METHANE	UG/KG	ND	5800	
BIS(2-CHLOROISOPROPYL)ETHER	UG/KG	ND	5800	
BIS(2-ETHYLHEXYL)PHTHALATE	UG/KG	ND	5800	
4-BROMOPHENYL-PHENYLETHER	UG/KG	ND	5800	
BUTYLBENZYLPHTHALATE	UG/KG	ND	5800	
4-CHLOROANILINE	UG/KG	ND	5800	
1-CHLORONAPHTHALENE	UG/KG	ND	5800	
2-CHLORONAPHTHALENE	UG/KG	ND	5800	
4-CHLOROPHENYL-PHENYLETHER	UG/KG	ND	5800	
CHRYSENE	UG/KG	ND	5800	
DIBENZO(A,H)ANTHRACENE	UG/KG	ND	5800	
DIBENZ(A,J)ACRIDINE	UG/KG	ND	5800	
DIBENZOFURAN	UG/KG	ND	5800	
1,2-DICHLOROBENZENE	UG/KG	ND	5800	
1,3-DICHLOROBENZENE	UG/KG	ND	5800	
1,4-DICHLOROBENZENE	UG/KG	ND	5800	
3,3'-DICHLOROBENZIDINE	UG/KG	ND	29000	
DIETHYLPHTHALATE	UG/KG	ND	5800	
P-DIMETHYLAMINOAZOBENZENE	UG/KG	ND	5800	
7,12-DIMETHYLBENZO(a)ANTHRACENE	UG/KG	ND	5800	
A-,A-DIMETHYLPHENETHYLAMINE	UG/KG	ND	5800	
DIMETHYLPHTHALATE	UG/KG	ND	5800	
DI-N-BUTYLPHTHALATE	UG/KG	ND	5800	
2,4-DINITROTOLUENE	UG/KG	ND	5800	
2,6-DINITROTOLUENE	UG/KG	ND	5800	
DI-N-OCTYLPHTHALATE	UG/KG	ND	5800	

"FINAL REPORT FORMAT - SINGLE"

Accession: 603312
Client: CSX TRANSPORTATION
Project Number: 4365B
Project Name: GREENVILLE, SC
Project Location: GREENVILLE, SC
Test: BN EXTRACTABLES (8270)
Analysis Method: 8270 / SW-846, 3rd Edition, September 1986 and Rev. 1, July 1992.
Extraction Method: 3550 / SW-846, 3rd Edition, September 1986 and Rev. 1, July 1992.
Matrix: SOIL
QC Level: II

Lab Id: 004
Client Sample Id: WW-12
Sample Date/Time: 15-MAR-96 1145
Received Date: 18-MAR-96

Parameter:	Units:	Results:	Rpt Lmts:	Q:
DIPHENYLAMINE	UG/KG	ND	5800	
1,2-DIPHENYLHYDRAZINE	UG/KG	ND	5800	
FLUORANTHENE	UG/KG	ND	5800	
FLUORENE	UG/KG	ND	5800	
HEXACHLOROBENZENE	UG/KG	ND	5800	
HEXACHLOROBUTADIENE	UG/KG	ND	5800	
HEXACHLOROCYCLOPENTADIENE	UG/KG	ND	5800	
HEXACHLOROETHANE	UG/KG	ND	5800	
INDENO(1,2,3-cd)PYRENE	UG/KG	ND	5800	
ISOPHORONE	UG/KG	ND	5800	
3-METHYLCHOLANTHRENE	UG/KG	ND	5800	
2-METHYLNAPHTHALENE	UG/KG	ND	5800	
NAPHTHALENE	UG/KG	ND	5800	
1-NAPHTHYLAMINE	UG/KG	ND	5800	
2-NAPHTHYLAMINE	UG/KG	ND	5800	
2-NITROANILINE	UG/KG	ND	5800	
3-NITROANILINE	UG/KG	ND	5800	
4-NITROANILINE	UG/KG	ND	5800	
NITROBENZENE	UG/KG	ND	5800	
N-NITROSODIMETHYLAMINE	UG/KG	ND	5800	
N-NITROSODI-N-BUTYLAMINE	UG/KG	ND	5800	
N-NITROSODIPHENYLAMINE	UG/KG	ND	5800	
N-NITROSO-DI-N-PROPYLAMINE	UG/KG	ND	5800	
N-NITROSOPIPERIDINE	UG/KG	ND	5800	
PENTACHLOROBENZENE	UG/KG	ND	5800	
PENTACHLORONITROBENZENE (PCNB)	UG/KG	ND	5800	
PHENACETIN	UG/KG	ND	5800	
PHENANTHRENE	UG/KG	ND	5800	
2-PICOLINE	UG/KG	ND	5800	
PRONAMIDE	UG/KG	ND	5800	
PYRENE	UG/KG	ND	5800	
1,2,4,5-TETRACHLOROBENZENE	UG/KG	ND	5800	
1,2,4 TRICHLOROBENZENE	UG/KG	ND	5800	
2-FLUOROBIPHENYL	%REC/SURR	104	30-115	
NITROBENZENE-D5	%REC/SURR	85	23-120	
TERPHENYL-D14	%REC/SURR	117	18-137	
ANALYST	INITIALS	PL		

Comments:

"FINAL REPORT FORMAT - SINGLE"

Accession: 604535
Client: CSX TRANSPORTATION
Project Number: 4365B
Project Name: VAUGHN LANDFILL
Project Location: CSXT9415585
Test: BN EXTRACTABLES (8270)
Analysis Method: 8270 / SW-846, 3rd Edition, September 1986 and Rev. 1, July 1992.
Extraction Method: 3550 / SW-846, 3rd Edition, September 1986 and Rev. 1, July 1992.
Matrix: SOIL
QC Level: I

Lab Id: 001 Sample Date/Time: 24-APR-96 1115
Client Sample Id: WW13 Received Date: 26-APR-96

Batch: ALS028 Extraction Date: 01-MAY-96
Blank: A Dry Weight %: 56 Analysis Date: 08-MAY-96

Parameter:	Units:	Results:	Rpt Lmts:	Q:
ACENAPHTHENE	UG/KG	ND	6500	
ACENAPHTHYLENE	UG/KG	13000	6500	
ACETOPHENONE	UG/KG	ND	6500	
4-AMINOBIPHENYL	UG/KG	ND	6500	
ANILINE	UG/KG	ND	6500	
ANTHRACENE	UG/KG	ND	6500	
BENZIDINE	UG/KG	ND	6500	
BENZO(a)ANTHRACENE	UG/KG	33000	6500	
BENZO(a)PYRENE	UG/KG	32000	6500	
BENZO(b)FLUORANTHENE	UG/KG	24000	6500	
BENZO(g,h,i)PERYLENE	UG/KG	19000	6500	
BENZO(k)FLUORANTHENE	UG/KG	36000	6500	
BENZYL ALCOHOL	UG/KG	ND	6500	
BIS(2-CHLOROETHYL)ETHER	UG/KG	ND	6500	
BIS(2-CHLOROETHOXY)METHANE	UG/KG	ND	6500	
BIS(2-CHLOROISOPROPYL)ETHER	UG/KG	ND	6500	
BIS(2-ETHYLHEXYL)PHTHALATE	UG/KG	ND	6500	
4-BROMOPHENYL-PHENYLETHER	UG/KG	ND	6500	
BUTYLBENZYLPHTHALATE	UG/KG	ND	6500	
4-CHLOROANILINE	UG/KG	ND	6500	
1-CHLORONAPHTHALENE	UG/KG	ND	6500	
2-CHLORONAPHTHALENE	UG/KG	ND	6500	
4-CHLOROPHENYL-PHENYLETHER	UG/KG	ND	6500	
CHRYSENE	UG/KG	32000	6500	
DIBENZO(A,H)ANTHRACENE	UG/KG	ND	6500	
DIBENZ(A,J)ACRIDINE	UG/KG	ND	6500	
DIBENZOFURAN	UG/KG	ND	6500	
1,2-DICHLOROBENZENE	UG/KG	ND	6500	
1,3-DICHLOROBENZENE	UG/KG	ND	6500	
1,4-DICHLOROBENZENE	UG/KG	ND	6500	
3,3'-DICHLOROBENZIDINE	UG/KG	ND	33000	
DIETHYLPHTHALATE	UG/KG	ND	6500	
P-DIMETHYLAMINOAZOBENZENE	UG/KG	ND	6500	
7,12-DIMETHYLBENZO(a)ANTHRACENE	UG/KG	ND	6500	
A-,A-DIMETHYLPHENETHYLAMINE	UG/KG	ND	6500	
DIMETHYLPHTHALATE	UG/KG	ND	6500	
DI-N-BUTYLPHTHALATE	UG/KG	ND	6500	
2,4-DINITROTOLUENE	UG/KG	ND	6500	
2,6-DINITROTOLUENE	UG/KG	ND	6500	
DI-N-OCTYLPHTHALATE	UG/KG	ND	6500	

"FINAL REPORT FORMAT - SINGLE"

Accession: 604535
Client: CSX TRANSPORTATION
Project Number: 4365B
Project Name: VAUGHN LANDFILL
Project Location: CSXT9415585
Test: BN EXTRACTABLES (8270)
Analysis Method: 8270 / SW-846, 3rd Edition, September 1986 and Rev. 1, July 1992.
Extraction Method: 3550 / SW-846, 3rd Edition, September 1986 and Rev. 1, July 1992.
Matrix: SOIL
QC Level: I

Lab Id: 001
Client Sample Id: WW13
Sample Date/Time: 24-APR-96 1115
Received Date: 26-APR-96

Parameter:	Units:	Results:	Rpt Lmts:	Q:
DIPHENYLAMINE	UG/KG	ND	6500	
1,2-DIPHENYLHYDRAZINE	UG/KG	ND	6500	
FLUORANTHENE	UG/KG	52000	6500	
FLUORENE	UG/KG	ND	6500	
HEXACHLOROBENZENE	UG/KG	ND	6500	
HEXACHLOROBUTADIENE	UG/KG	ND	6500	
HEXACHLOROCYCLOPENTADIENE	UG/KG	ND	6500	
HEXACHLOROETHANE	UG/KG	ND	6500	
INDENO(1,2,3-cd)PYRENE	UG/KG	17000	6500	
ISOPHORONE	UG/KG	ND	6500	
3-METHYLCHOLANTHRENE	UG/KG	ND	6500	
2-METHYLNAPHTHALENE	UG/KG	ND	6500	
NAPHTHALENE	UG/KG	ND	6500	
1-NAPHTHYLAMINE	UG/KG	ND	6500	
2-NAPHTHYLAMINE	UG/KG	ND	6500	
2-NITROANILINE	UG/KG	ND	6500	
3-NITROANILINE	UG/KG	ND	6500	
4-NITROANILINE	UG/KG	ND	6500	
NITROBENZENE	UG/KG	ND	6500	
N-NITROSODIMETHYLAMINE	UG/KG	ND	6500	
N-NITROSODI-N-BUTYLAMINE	UG/KG	ND	6500	
N-NITROSODIPHENYLAMINE	UG/KG	ND	6500	
N-NITROSO-DI-N-PROPYLAMINE	UG/KG	ND	6500	
N-NITROSOPIPERIDINE	UG/KG	ND	6500	
PENTACHLOROBENZENE	UG/KG	ND	6500	
PENTACHLORONITROBENZENE (PCNB)	UG/KG	ND	6500	
PHENACETIN	UG/KG	ND	6500	
PHENANTHRENE	UG/KG	37000	6500	
2-PICOLINE	UG/KG	ND	6500	
PRONAMIDE	UG/KG	ND	6500	
PYRENE	UG/KG	73000	6500	
1,2,4,5-TETRACHLOROBENZENE	UG/KG	ND	6500	
1,2,4 TRICHLOROBENZENE	UG/KG	ND	6500	
2-FLUOROBIPHENYL	%REC/SURR	85	30-115	
NITROBENZENE-D5	%REC/SURR	49	23-120	
TERPHENYL-D14	%REC/SURR	112	18-137	
ANALYST	INITIALS	RW		

Comments:

G-3

QUALITY CONTROL DATA

G 3

ANALYTICAL TECHNOLOGIES, INC. 11 East Olive Road Pensacola, Florida 32514 (904) 474-1001

Quality Control Report

Analysis: SW 846 8260 TABLE SIX

Accession:	603261
Client:	CSX TRANSPORTATION
Project Number:	4365B
Project Name:	CSX GREENVILLE
Project Location:	GREENVILLE, SC
Department:	ORGANIC/MS

ANALYTICAL TECHNOLOGIES, INC. 11 East Olive Road Pensacola, Florida 32514 (904) 474-1001

"QC Report"

Title: Water Blank
Batch: MAW025
Analysis Method: 8260 / SW-846, 3rd Edition, September 1986 and Rev. 1, July 1992.
Extraction Method: N/A

Blank Id: C Date Analyzed: 23-MAR-96 Date Extracted: N/A

Parameters:	Units:	Results:	Reporting Limits:
ACROLEIN	UG/L	ND	100
ACETONE	UG/L	ND	10
ACETONITRILE	UG/L	ND	100
ACRYLONITRILE	UG/L	ND	100
ALLYL CHLORIDE	UG/L	ND	100
BENZENE	UG/L	ND	5
BROMOCHLOROMETHANE	UG/L	ND	5
BROMOBENZENE	UG/L	ND	5
BROMODICHLOROMETHANE	UG/L	ND	5
BROMOFORM	UG/L	ND	5
BROMOMETHANE	UG/L	ND	5
2-BUTANONE	UG/L	ND	5
CARBON DISULFIDE	UG/L	ND	5
CHLOROPRENE	UG/L	ND	5
CARBON TETRACHLORIDE	UG/L	ND	5
CHLOROBENZENE	UG/L	ND	5
CHLOROETHANE	UG/L	ND	5
CHLOROFORM	UG/L	ND	5
CHLOROMETHANE	UG/L	ND	5
2-CHLOROTOLUENE	UG/L	ND	5
4-CHLOROTOLUENE	UG/L	ND	5
CIS 1,2 DICHLOROETHYLENE	UG/L	ND	5
CHLORODIBROMOMETHANE	UG/L	ND	5
1,2 DIBROMOETHANE	UG/L	ND	5
1,2-DIBROMO-3-CHLOROPROPANE	UG/L	ND	5
1,4-DICHLORO-2-BUTENE	UG/L	ND	5
DIBROMOMETHANE	UG/L	ND	5
1,4-DICHLOROBENZENE	UG/L	ND	5
1,3-DICHLOROBENZENE	UG/L	ND	5
1,2-DICHLOROBENZENE	UG/L	ND	5
DICHLORODIFLUOROMETHANE	UG/L	ND	5
1,1-DICHLOROETHANE	UG/L	ND	5
1,2-DICHLOROETHANE	UG/L	ND	5
1,1-DICHLOROETHENE	UG/L	ND	5
1,3 DICHLOROPROPANE	UG/L	ND	5
2,2-DICHLOROPROPANE	UG/L	ND	5
1,2-DICHLOROPROPANE	UG/L	ND	5
CIS-1,3-DICHLOROPROPENE	UG/L	ND	5
TRANS-1,3-DICHLOROPROPENE	UG/L	ND	5
1,1 DICHLOROPROPENE	UG/L	ND	5
ETHYL BENZENE	UG/L	ND	5
METHYL METHACRYLATE	UG/L	ND	5
METHACRYLONITRILE	UG/L	ND	5
4-METHYL-2-PENTANONE	UG/L	ND	5
HEXACHLOROBUTADIENE	UG/L	ND	5
2-HEXANONE	UG/L	ND	5

"QC Report"

Title: Water Blank
Batch: MAW025
Analysis Method: 8260 / SW-846, 3rd Edition, September 1986 and Rev. 1, July 1992.
Extraction Method: N/A

Parameters:	Units:	Results:	Reporting Limits:
ISOPROPYL BENZENE	UG/L	ND	5
ISOBUTYL ALCOHOL	UG/L	ND	10
IODOMETHANE	UG/L	ND	5
P-ISOPROPYLTOLUENE	UG/L	ND	5
METHYLENE CHLORIDE	UG/L	ND	5
NAPHTHALENE	UG/L	ND	5
N-BUTYL BENZENE	UG/L	ND	5
N-PROPYL BENZENE	UG/L	ND	5
PROPIONITRILE	UG/L	ND	5
SEC-BUTYL BENZENE	UG/L	ND	5
STYRENE	UG/L	ND	5
TERT-BUTYL BENZENE	UG/L	ND	5
1,1,1,2-TETRACHLOROETHANE	UG/L	ND	5
1,1,2,2-TETRACHLOROETHANE	UG/L	ND	5
TETRACHLOROETHENE	UG/L	ND	5
TOLUENE	UG/L	ND	5
TOLUENE DIISOCYANATE	UG/L	ND	10
TOLUENE DIAMINE	UG/L	ND	10
TRANS 1,2 DICHLOROETHYLENE	UG/L	ND	5
1,1,1-TRICHLOROETHANE	UG/L	ND	5
1,1,2-TRICHLOROETHANE	UG/L	ND	5
1,2,3 TRICHLOROBENZENE	UG/L	ND	5
1,2,4 TRICHLOROBENZENE	UG/L	ND	5
TRICHLOROETHENE	UG/L	ND	5
TRICHLOROFLUOROMETHANE	UG/L	ND	5
1,2,3 TRICHLOROPROPANE	UG/L	ND	5
1,2,4-TRIMETHYLBENZENE	UG/L	ND	5
1,3,5-TRIMETHYLBENZENE	UG/L	ND	5
VINYL ACETATE	UG/L	ND	5
VINYL CHLORIDE	UG/L	ND	5
M,P-XYLENE	UG/L	ND	5
O-XYLENE	UG/L	ND	5
DIBROMOFLUOROMETHANE	%REC/SURR	97	89-116
TOLUENE-D8	%REC/SURR	100	88-110
BROMOFLUOROBENZENE	%REC/SURR	98	86-115
ANALYST	INITIALS	LL	

Comments:

"QC Report"

Title: High Soil Blank
Batch: MAS026
Analysis Method: 8260 / SW-846, 3rd Edition, September 1986 and Rev. 1, July 1992.
Extraction Method: 8260 / SW-846, 3rd Edition, September 1986 and Rev. 1, July 1992.

Blank Id: A Date Analyzed: 25-MAR-96 Date Extracted: 25-MAR-96

Parameters:	Units:	Results:	Reporting Limits:
ACROLEIN	UG/KG	ND	1000
ACETONE	UG/KG	ND	100
ACETONITRILE	UG/KG	ND	1000
ACRYLONITRILE	UG/KG	ND	1000
ALLYL CHLORIDE	UG/KG	ND	1000
BENZENE	UG/KG	ND	50
BROMOCHLOROMETHANE	UG/KG	ND	50
BROMOBENZENE	UG/KG	ND	50
BROMODICHLOROMETHANE	UG/KG	ND	50
BROMOFORM	UG/KG	ND	50
BROMOMETHANE	UG/KG	ND	50
2-BUTANONE	UG/KG	ND	50
CARBON DISULFIDE	UG/KG	ND	50
CHLOROPRENE	UG/KG	ND	50
CARBON TETRACHLORIDE	UG/KG	ND	50
CHLOROBENZENE	UG/KG	ND	50
CHLOROETHANE	UG/KG	ND	50
CHLOROFORM	UG/KG	ND	50
CHLOROMETHANE	UG/KG	ND	50
2-CHLOROTOLUENE	UG/KG	ND	50
4-CHLOROTOLUENE	UG/KG	ND	50
CIS 1,2 DICHLOROETHYLENE	UG/KG	ND	50
CHLORODIBROMOMETHANE	UG/KG	ND	50
1,2 DIBROMOETHANE	UG/KG	ND	50
1,2-DIBROMO-3-CHLOROPROPANE	UG/KG	ND	50
1,4-DICHLORO-2-BUTENE	UG/KG	ND	50
DIBROMOMETHANE	UG/KG	ND	50
1,4-DICHLOROBENZENE	UG/KG	ND	50
1,3-DICHLOROBENZENE	UG/KG	ND	50
1,2-DICHLOROBENZENE	UG/KG	ND	50
DICHLORODIFLUOROMETHANE	UG/KG	ND	50
1,1-DICHLOROETHANE	UG/KG	ND	50
1,2-DICHLOROETHANE	UG/KG	ND	50
1,1-DICHLOROETHENE	UG/KG	ND	50
1,3 DICHLOROPROPANE	UG/KG	ND	50
2,2-DICHLOROPROPANE	UG/KG	ND	50
1,2-DICHLOROPROPANE	UG/KG	ND	50
CIS-1,3-DICHLOROPROPENE	UG/KG	ND	50
TRANS-1,3-DICHLOROPROPENE	UG/KG	ND	50
1,1 DICHLOROPROPENE	UG/KG	ND	50
ETHYL BENZENE	UG/KG	ND	50
METHYL METHACRYLATE	UG/KG	ND	50
METHACRYLONITRILE	UG/KG	ND	50
4-METHYL-2-PENTANONE	UG/KG	ND	50
HEXACHLOROBUTADIENE	UG/KG	ND	50
2-HEXANONE	UG/KG	ND	50

"QC Report"

Title: High Soil Blank
Batch: MAS026
Analysis Method: 8260 / SW-846, 3rd Edition, September 1986 and Rev. 1, July 1992.
Extraction Method: 8260 / SW-846, 3rd Edition, September 1986 and Rev. 1, July 1992.

Parameters:	Units:	Results:	Reporting Limits:
ISOPROPYL BENZENE	UG/KG	ND	50
ISOBUTYL ALCOHOL	UG/KG	ND	100
IODOMETHANE	UG/KG	ND	50
P-ISOPROPYLTOLUENE	UG/KG	ND	50
METHYLENE CHLORIDE	UG/KG	ND	50
NAPHTHALENE	UG/KG	ND	50
N-BUTYL BENZENE	UG/KG	ND	50
N-PROPYL BENZENE	UG/KG	ND	50
PROPIONITRILE	UG/KG	ND	50
SEC-BUTYL BENZENE	UG/KG	ND	50
STYRENE	UG/KG	ND	50
TERT-BUTYL BENZENE	UG/KG	ND	50
1,1,1,2-TETRACHLOROETHANE	UG/KG	ND	50
1,1,2,2-TETRACHLOROETHANE	UG/KG	ND	50
TETRACHLOROETHENE	UG/KG	ND	50
TOLUENE	UG/KG	ND	50
TOLUENE DIISOCYANATE	UG/KG	ND	100
TOLUENE DIAMINE	UG/KG	ND	100
TRANS 1,2 DICHLOROETHYLENE	UG/KG	ND	50
1,1,1-TRICHLOROETHANE	UG/KG	ND	50
1,1,2-TRICHLOROETHANE	UG/KG	ND	50
1,2,3 TRICHLOROBENZENE	UG/KG	ND	50
1,2,4 TRICHLOROBENZENE	UG/KG	ND	50
TRICHLOROETHENE	UG/KG	ND	50
TRICHLOROFLUOROMETHANE	UG/KG	ND	50
1,2,3 TRICHLOROPROPANE	UG/KG	ND	50
1,2,4-TRIMETHYLBENZENE	UG/KG	ND	50
1,3,5-TRIMETHYLBENZENE	UG/KG	ND	50
VINYL ACETATE	UG/KG	ND	50
VINYL CHLORIDE	UG/KG	ND	50
M,P-XYLENE	UG/KG	ND	50
O-XYLENE	UG/KG	ND	50
DIBROMOFLUOROMETHANE	%REC/SURR	96	80-120
TOLUENE-D8	%REC/SURR	99	81-117
BROMOFLUOROBENZENE	%REC/SURR	94	74-121
ANALYST	INITIALS	LL	

Comments:

"QC Report"

Title: Low Soil Blank
Batch: MAS025
Analysis Method: 8260 / SW-846, 3rd Edition, September 1986 and Rev. 1, July 1992.
Extraction Method: N/A

Blank Id: B Date Analyzed: 22-MAR-96 Date Extracted: N/A

Parameters:	Units:	Results:	Reporting Limits:
ACROLEIN	UG/KG	ND	100
ACETONE	UG/KG	ND	10
ACETONITRILE	UG/KG	ND	100
ACRYLONITRILE	UG/KG	ND	100
ALLYL CHLORIDE	UG/KG	ND	100
BENZENE	UG/KG	ND	5
BROMOCHLOROMETHANE	UG/KG	ND	5
BROMOBENZENE	UG/KG	ND	5
BROMODICHLOROMETHANE	UG/KG	ND	5
BROMOFORM	UG/KG	ND	5
BROMOMETHANE	UG/KG	ND	5
2-BUTANONE	UG/KG	ND	5
CARBON DISULFIDE	UG/KG	ND	5
CHLOROPRENE	UG/KG	ND	5
CARBON TETRACHLORIDE	UG/KG	ND	5
CHLOROBENZENE	UG/KG	ND	5
CHLOROETHANE	UG/KG	ND	5
CHLOROFORM	UG/KG	ND	5
CHLOROMETHANE	UG/KG	ND	5
2-CHLOROTOLUENE	UG/KG	ND	5
4-CHLOROTOLUENE	UG/KG	ND	5
CIS 1,2 DICHLOROETHYLENE	UG/KG	ND	5
CHLORODIBROMOMETHANE	UG/KG	ND	5
1,2 DIBROMOETHANE	UG/KG	ND	5
1,2-DIBROMO-3-CHLOROPROPANE	UG/KG	ND	5
1,4-DICHLORO-2-BUTENE	UG/KG	ND	5
DIBROMOMETHANE	UG/KG	ND	5
1,4-DICHLOROBENZENE	UG/KG	ND	5
1,3-DICHLOROBENZENE	UG/KG	ND	5
1,2-DICHLOROBENZENE	UG/KG	ND	5
DICHLORODIFLUOROMETHANE	UG/KG	ND	5
1,1-DICHLOROETHANE	UG/KG	ND	5
1,2-DICHLOROETHANE	UG/KG	ND	5
1,1-DICHLOROETHENE	UG/KG	ND	5
1,3 DICHLOROPROPANE	UG/KG	ND	5
2,2-DICHLOROPROPANE	UG/KG	ND	5
1,2-DICHLOROPROPANE	UG/KG	ND	5
CIS-1,3-DICHLOROPROPENE	UG/KG	ND	5
TRANS-1,3-DICHLOROPROPENE	UG/KG	ND	5
1,1 DICHLOROPROPENE	UG/KG	ND	5
ETHYL BENZENE	UG/KG	ND	5
METHYL METHACRYLATE	UG/KG	ND	5
METHACRYLONITRILE	UG/KG	ND	5
4-METHYL-2-PENTANONE	UG/KG	ND	5
HEXACHLOROBUTADIENE	UG/KG	ND	5
2-HEXANONE	UG/KG	ND	5

ANALYTICAL TECHNOLOGIES, INC. 11 East Olive Road Pensacola, Florida 32514 (904) 474-1001

"QC Report"

Title: Low Soil Blank
Batch: MAS025
Analysis Method: 8260 / SW-846, 3rd Edition, September 1986 and Rev. 1, July 1992.
Extraction Method: N/A

Parameters:	Units:	Results:	Reporting Limits:
ISOPROPYL BENZENE	UG/KG	ND	5
ISOBUTYL ALCOHOL	UG/KG	ND	10
IODOMETHANE	UG/KG	ND	5
P-ISOPROPYLTOLUENE	UG/KG	ND	5
METHYLENE CHLORIDE	UG/KG	ND	5
NAPHTHALENE	UG/KG	ND	5
N-BUTYL BENZENE	UG/KG	ND	5
N-PROPYL BENZENE	UG/KG	ND	5
PROPIONITRILE	UG/KG	ND	5
SEC-BUTYL BENZENE	UG/KG	ND	5
STYRENE	UG/KG	ND	5
TERT-BUTYL BENZENE	UG/KG	ND	5
1,1,1,2-TETRACHLOROETHANE	UG/KG	ND	5
1,1,2,2-TETRACHLOROETHANE	UG/KG	ND	5
TETRACHLOROETHENE	UG/KG	ND	5
TOLUENE	UG/KG	ND	5
TOLUENE DIISOCYANATE	UG/KG	ND	10
TOLUENE DIAMINE	UG/KG	ND	10
TRANS 1,2 DICHLOROETHYLENE	UG/KG	ND	5
1,1,1-TRICHLOROETHANE	UG/KG	ND	5
1,1,2-TRICHLOROETHANE	UG/KG	ND	5
1,2,3 TRICHLOROBENZENE	UG/KG	ND	5
1,2,4 TRICHLOROBENZENE	UG/KG	ND	5
TRICHLOROETHENE	UG/KG	ND	5
TRICHLOROFLUOROMETHANE	UG/KG	ND	5
1,2,3 TRICHLOROPROPANE	UG/KG	ND	5
1,2,4-TRIMETHYLBENZENE	UG/KG	ND	5
1,3,5-TRIMETHYLBENZENE	UG/KG	ND	5
VINYL ACETATE	UG/KG	ND	5
VINYL CHLORIDE	UG/KG	ND	5
M,P-XYLENE	UG/KG	ND	5
O-XYLENE	UG/KG	ND	5
DIBROMOFLUOROMETHANE	%REC/SURR	103	80-120
TOLUENE-D8	%REC/SURR	100	81-117
BROMOFLUOROBENZENE	%REC/SURR	102	74-121
ANALYST	INITIALS	LL	

Comments:

"QC Report"

Title: Water Reagent
Batch: MAW025
Analysis Method: 8260 / SW-846, 3rd Edition, September 1986 and Rev. 1, July 1992.
Extraction Method: N/A

RS Date Analyzed: 22-MAR-96
RSD Date Analyzed: 22-MAR-96

RS Date Extracted: N/A
RSD Date Extracted: N/A

Parameters:	Spike Added	Sample Conc	RS Conc	RS %Rec	RSD Conc	RSD %Rec	RPD	RPD Lmts	Rec Lmts
1,1-DICHLOROETHENE	50	<5	56	112	57	114	2	30	72-122
TRICHLOROETHENE	50	<5	51	102	51	102	0	30	81-114
BENZENE	50	<5	57	114	57	114	0	30	87-120
TOLUENE	50	<5	52	104	53	106	2	30	83-120
CHLOROBENZENE	50	<5	52	104	53	106	2	30	87-113
Surrogates:									
DIBROMOFLUOROMETHANE				103		105			89-116
TOLUENE-D8				105		106			88-110
BROMOFLUOROBENZENE				99		99			86-115

Comments:

Notes:
N/S = NOT SUBMITTED N/A = NOT APPLICABLE D = DILUTED OUT
UG/L = PARTS PER BILLION. < = LESS THAN REPORTING LIMIT.
* = VALUES OUTSIDE OF QUALITY CONTROL LIMITS.
SOURCES FOR CONTROL LIMITS ARE INTERNAL LABORATORY QUALITY ASSURANCE PROGRAM AND REFERENCED METHOD.

"QC Report"

Title: Low Soil Reagent
Batch: MAS026
Analysis Method: 8260 / SW-846, 3rd Edition, September 1986 and Rev. 1, July 1992.
Extraction Method: 8260 / SW-846, 3rd Edition, September 1986 and Rev. 1, July 1992.

RS Date Analyzed: 25-MAR-96
RSD Date Analyzed: 25-MAR-96

RS Date Extracted: 25-MAR-96
RSD Date Extracted: 25-MAR-96

Parameters:	Spike Added	Sample Conc	RS Conc	RS %Rec	RSD Conc	RSD %Rec	RPD	RPD Lmts	Rec Lmts
1,1-DICHLOROETHENE	50	<5	44	88	47	94	7	30	1-234
TRICHLOROETHENE	50	<5	45	90	47	94	4	30	71-157
BENZENE	50	<5	50	100	51	102	2	30	37-151
TOLUENE	50	<5	45	90	47	94	4	30	47-150
CHLOROBENZENE	50	<5	45	90	47	94	4	30	37-160
Surrogates:									
DIBROMOFLUOROMETHANE				102		101			80-120
TOLUENE-D8				100		104			81-117
BROMOFLUOROBENZENE				93		94			74-121

Comments:

Notes:
N/S = NOT SUBMITTED N/A = NOT APPLICABLE D = DILUTED OUT
UG/KG = PARTS PER BILLION. < = LESS THAN REPORTING LIMIT.
* = VALUES OUTSIDE OF QUALITY CONTROL LIMITS.
SOURCES FOR CONTROL LIMITS ARE INTERNAL LABORATORY QUALITY ASSURANCE PROGRAM AND REFERENCED METHOD.

ANALYTICAL TECHNOLOGIES, INC. 11 East Olive Road Pensacola, Florida 32514 (904) 474-1001

"QC Report"

Title: Low Soil Reagent
Batch: MAS025
Analysis Method: 8260 / SW-846, 3rd Edition, September 1986 and Rev. 1, July 1992.
Extraction Method: N/A

RS Date Analyzed: 22-MAR-96
RSD Date Analyzed: 22-MAR-96

RS Date Extracted: N/A
RSD Date Extracted: N/A

Parameters:	Spike Added	Sample Conc	RS Conc	RS %Rec	RSD Conc	RSD %Rec	RPD	RPD Lmts	Rec Lmts
1,1-DICHLOROETHENE	50	<5	56	112	57	114	2	30	1-234
TRICHLOROETHENE	50	<5	51	102	51	102	0	30	71-157
BENZENE	50	<5	57	114	57	114	0	30	37-151
TOLUENE	50	<5	52	104	53	106	2	30	47-150
CHLOROBENZENE	50	<5	52	104	53	106	2	30	37-160
Surrogates:									
DIBROMOFLUOROMETHANE				103		105			80-120
TOLUENE-D8				105		106			81-117
BROMOFLUOROBENZENE				99		99			74-121

Comments:

Notes:
N/S = NOT SUBMITTED N/A = NOT APPLICABLE D = DILUTED OUT
UG/KG = PARTS PER BILLION. < = LESS THAN REPORTING LIMIT.
* = VALUES OUTSIDE OF QUALITY CONTROL LIMITS.
SOURCES FOR CONTROL LIMITS ARE INTERNAL LABORATORY QUALITY ASSURANCE PROGRAM AND REFERENCED METHOD.

"QC Report"

Title: Water Matrix
Batch: MAW025
Analysis Method: 8260 / SW-846, 3rd Edition, September 1986 and Rev. 1, July 1992.
Extraction Method: N/A

Dry Weight %: N/A
Sample Spiked: 603254-2

MS Date Analyzed: 22-MAR-96
MSD Date Analyzed: 22-MAR-96

MS Date Extracted: N/A
MSD Date Extracted: N/A

Parameters:	Spike Added	Sample Conc	MS Conc	MS %Rec	MSD Conc	MSD %Rec	RPD	RPD Lmts	Rec Lmts
1,1-DICHLOROETHENE	50	<5	50	100	52	104	4	14	74-124
TRICHLOROETHENE	50	<5	50	100	51	102	2	24	79-116
BENZENE	50	<5	53	106	55	110	4	16	65-142
TOLUENE	50	<5	50	100	51	102	2	15	89-114
CHLOROBENZENE	50	<5	51	102	51	102	0	15	85-116
Surrogates:									
DIBROMOFLUOROMETHANE				102		104			89-116
TOLUENE-D8				102		105			88-110
BROMOFLUOROBENZENE				98		108			86-115

Comments:

Notes:
N/S = NOT SUBMITTED N/A = NOT APPLICABLE D = DILUTED OUT
UG/L = PARTS PER BILLION. < = LESS THAN REPORTING LIMIT.
* = VALUES OUTSIDE OF QUALITY CONTROL LIMITS.
SOURCES FOR CONTROL LIMITS ARE INTERNAL LABORATORY QUALITY ASSURANCE PROGRAM AND REFERENCED METHOD.

"QC Report"

Title: Low Soil Matrix
Batch: MAS026
Analysis Method: 8260 / SW-846, 3rd Edition, September 1986 and Rev. 1, July 1992.
Extraction Method: 8260 / SW-846, 3rd Edition, September 1986 and Rev. 1, July 1992.

Dry Weight %:
Sample Spiked:

MS Date Analyzed:
MSD Date Analyzed:

MS Date Extracted:
MSD Date Extracted:

Parameters:	Spike Added	Sample Conc	MS Conc	MS %Rec	MSD Conc	MSD %Rec	RPD	RPD Lmts	Rec Lmts
1,1-DICHLOROETHENE								42	1-234
TRICHLOROETHENE								20	71-157
BENZENE								20	37-151
TOLUENE								44	47-150
CHLOROBENZENE								20	37-160
Surrogates:									
DIBROMOFLUOROMETHANE									80-120
TOLUENE-D8									81-117
BROMOFLUOROBENZENE									74-121

Comments:
NO MATRIX SPIKE/MATRIX SPIKE DUPLICATE AVALIABLE DUE TO HIGH DILUTION.

Notes:
N/S = NOT SUBMITTED N/A = NOT APPLICABLE D = DILUTED OUT
UG/KG = PARTS PER BILLION. < = LESS THAN REPORTING LIMIT.
* = VALUES OUTSIDE OF QUALITY CONTROL LIMITS.
SOURCES FOR CONTROL LIMITS ARE INTERNAL LABORATORY QUALITY ASSURANCE PROGRAM AND REFERENCED METHOD.

"QC Report"

Title: Low Soil Matrix
Batch: MAS025
Analysis Method: 8260 / SW-846, 3rd Edition, September 1986 and Rev. 1, July 1992.
Extraction Method: N/A

Dry Weight %: 85
Sample Spiked: 603254-13

MS Date Analyzed: 23-MAR-96
MSD Date Analyzed: 23-MAR-96

MS Date Extracted: N/A
MSD Date Extracted: N/A

Parameters:	Spike Added	Sample Conc	MS Conc	MS %Rec	MSD Conc	MSD %Rec	RPD	RPD Lmts	Rec Lmts
1,1-DICHLOROETHENE	59	<5.9	58	98	59	100	2	42	1-234
TRICHLOROETHENE	59	<5.9	59	100	59	100	0	20	71-157
BENZENE	59	<5.9	64	108	64	108	0	20	37-151
TOLUENE	59	<5.9	59	100	59	100	0	44	47-150
CHLOROBENZENE	59	<5.9	60	102	59	100	2	20	37-160
Surrogates:									
DIBROMOFLUOROMETHANE				100		104			80-120
TOLUENE-D8				100		102			81-117
BROMOFLUOROBENZENE				100		105			74-121

Comments:

Notes:
N/S = NOT SUBMITTED N/A = NOT APPLICABLE D = DILUTED OUT
UG/KG = PARTS PER BILLION. < = LESS THAN REPORTING LIMIT.
* = VALUES OUTSIDE OF QUALITY CONTROL LIMITS.
SOURCES FOR CONTROL LIMITS ARE INTERNAL LABORATORY QUALITY ASSURANCE PROGRAM AND REFERENCED METHOD.

Common notation for Organic reporting

N/S = NOT SUBMITTED
N/A = NOT APPLICABLE
D = DILUTED OUT
UG/L = PARTS PER BILLION.
UG/KG = PARTS PER BILLION.
MG/KG = PARTS PER MILLION.
MG/L = PARTS PER MILLION.
MG/M3 = MILLIGRAMS PER CUBIC METER.
NG = NANOGRAMS.
UG = MICROGRAMS.
PPBV = PARTS PER BILLION/VOLUME.
< = LESS THAN DETECTION LIMIT.
* = VALUES OUTSIDE OF QUALITY CONTROL LIMITS
J = THE REPORTED VALUE IS EITHER LESS THAN THE REPORTING LIMIT BUT GREATER THAN ZERO, OR QUANTITATED AS A TIC; THEREFORE, IT IS ESTIMATED.
JJ = REPORTED VALUE IS ESTIMATED DUE TO MATRIX INTERFERENCE.
ND = NOT DETECTED ABOVE REPORT LIMIT.
RPT LIMIT = REPORTING LIMITS BASED ON METHOD DETECTION LIMIT STUDIES.
RPD = RELATIVE PERCENT DIFFERENCE (OR DEVIATION)

SOURCES FOR CONTROL LIMITS ARE INTERNAL LABORATORY QUALITY ASSURANCE PROGRAM AND REFERENCED METHOD.

ORGANIC SOILS ARE REPORTED ON A DRY WEIGHT BASIS.

DUE TO THE NATURE OF THE SAMPLE MATRIX, MATRIX SPIKE/MATRIX SPIKE DUPLICATE ANALYSIS CANNOT BE PERFORMED FOR AIR ANALYSIS.

CLP SOW 1991, USEPA CONTRACT LABORATORY PROGRAM, STATEMENT OF WORK FOR ORGANICS ANALYSIS, DOCUMENT NUMBER OLM01.8, AUGUST 1991.

LP = LEVERNE PETERSON	RW = RITA WINGO
DWB = DAVID BOWERS	LD = LARRY DILMORE
DB = DENNIS BESON	DC = DAVID CELESTIAL
LL = LANCE LARSON	RB = RAFAEL BARRAZA
JA = JENNIFER ALEXANDER	PL = PAUL LESCHENSKY

ANALYTICAL TECHNOLOGIES, INC. 11 East Olive Road Pensacola, Florida 32514 (904) 474-1001

Quality Control Report

Analysis: BN EXTRACTABLES (8270)

Accession:	603261
Client:	CSX TRANSPORTATION
Project Number:	4365B
Project Name:	CSX GREENVILLE
Project Location:	GREENVILLE, SC
Department:	ORGANIC/MS

ANALYTICAL TECHNOLOGIES, INC. 11 East Olive Road Pensacola, Florida 32514 (904) 474-1001

"QC Report"

Title: Water Blank
Batch: ALW024
Analysis Method: 8270 / SW-846, 3rd Edition, September 1986 and Rev. 1, July 1992.
Extraction Method: 3520 / SW-846, 3rd Edition, September 1986 and Rev. 1, July, 1992.

Blank Id: A Date Analyzed: 26-MAR-96 Date Extracted: 20-MAR-96

Parameters:	Units:	Results:	Reporting Limits:
P-CHLORO-M-CRESOL	UG/L	ND	10
2-CHLOROPHENOL	UG/L	ND	10
O-CRESOL	UG/L	ND	10
M,P CRESOL	UG/L	ND	10
2,4-DICHLOROPHENOL	UG/L	ND	10
2,6-DICHLOROPHENOL	UG/L	ND	10
2,4-DIMETHYLPHENOL	UG/L	ND	10
4,6-DINITRO-O-CRESOL	UG/L	ND	50
2,4-DINITROPHENOL	UG/L	ND	10
2-NITROPHENOL	UG/L	ND	10
4-NITROPHENOL	UG/L	ND	50
PENTACHLOROPHENOL	UG/L	ND	50
PHENOL	UG/L	ND	10
2,3,4,6-TETRACHLOROPHENOL	UG/L	ND	10
2,4,5-TRICHLOROPHENOL	UG/L	ND	50
2,4,6-TRICHLOROPHENOL	UG/L	ND	10
ACENAPHTHENE	UG/L	ND	10
ACENAPHTHYLENE	UG/L	ND	10
ACETOPHENONE	UG/L	ND	10
2-ACETYLAMINOFLUORENE	UG/L	ND	10
4-AMINOBIPHENYL	UG/L	ND	10
ANILINE	UG/L	ND	10
ANTHRACENE	UG/L	ND	10
ARAMITE	UG/L	ND	10
BENZO (A) ANTHRACENE	UG/L	ND	10
BENZO (A) PYRENE	UG/L	ND	10
BENZO (B) FLUORANTHENE	UG/L	ND	10
BENZO (G,H,I) PERYLENE	UG/L	ND	10
BENZO (K) FLUORANTHENE	UG/L	ND	10
BENZYL ALCOHOL	UG/L	ND	10
BIS(2-CHLORO-1-METHYLETHYL)ETHER	UG/L	ND	10
BIS(2-CHLOROETHOXY)METHANE	UG/L	ND	10
BIS(2-CHLOROETHYL)ETHER	UG/L	ND	10
BIS(2-ETHYLHEXYL)PHTHALATE	UG/L	ND	10
4-BROMOPHENYL PHENYL ETHER	UG/L	ND	10
BUTYLBENZYL PHTHALATE	UG/L	ND	10
P-CHLOROANILINE	UG/L	ND	10
CHLOROBENZILATE	UG/L	ND	10
2-CHLORONAPHTHALENE	UG/L	ND	10
4-CHLOROPHENYL PHENYL ETHER	UG/L	ND	10
CHRYSENE	UG/L	ND	10
DIALLATE	UG/L	ND	10
DIBENZO (A,H) ANTHRACENE	UG/L	ND	10
DIBENZOFURAN	UG/L	ND	10
1,2-DICHLOROBENZENE	UG/L	ND	10
1,3-DICHLOROBENZENE	UG/L	ND	10

"QC Report"

Title: Water Blank
Batch: ALW024
Analysis Method: 8270 / SW-846, 3rd Edition, September 1986 and Rev. 1, July 1992.
Extraction Method: 3520 / SW-846, 3rd Edition, September 1986 and Rev. 1, July, 1992.

Parameters:	Units:	Results:	Reporting Limits:
1,4-DICHLOROBENZENE	UG/L	ND	10
3,3'-DICHLOROBENZIDINE	UG/L	ND	50
DIETHYLPHTHALATE	UG/L	ND	10
DIMETHOATE	UG/L	ND	10
P-DIMETHYLAMINOAZOBENZENE	UG/L	ND	10
7,12-DIMETHYLBENZ(A)ANTHRACENE	UG/L	ND	10
3,3'-DIMETHYLBENZIDINE	UG/L	ND	10
A,A-DIMETHYLPHENETHYLAMINE	UG/L	ND	10
DIMETHYLPHTHALATE	UG/L	ND	10
DI-N-BUTYLPHTHALATE	UG/L	ND	10
M-DINITROBENZENE	UG/L	ND	10
2,4-DINITROTOLUENE	UG/L	ND	10
2,6-DINITROTOLUENE	UG/L	ND	10
DI-N-OCTYLPHTHALATE	UG/L	ND	10
DIPHENYLAMINE	UG/L	ND	10
ETHYL METHANESULFONATE	UG/L	ND	10
FAMPHUR	UG/L	ND	10
FLUORANTHENE	UG/L	ND	10
FLUORENE	UG/L	ND	10
HEXACHLOROBENZENE	UG/L	ND	10
HEXACHLOROBUTADIENE	UG/L	ND	10
HEXACHLOROCYCLOPENTADIENE	UG/L	ND	10
HEXACHLOROETHANE	UG/L	ND	10
HEXACHLOROPHENE	UG/L	ND	10
HEXACHLOROPROPENE	UG/L	ND	10
INDENO (1,2,3-CD) PYRENE	UG/L	ND	10
ISODRIN	UG/L	ND	10
ISOPHORONE	UG/L	ND	10
ISOSAFROLE	UG/L	ND	10
KEPONE	UG/L	ND	10
METHAPYRILENE	UG/L	ND	10
3-METHYLCHOLANTHRENE	UG/L	ND	10
METHYL METHANESULFONATE	UG/L	ND	10
1-METHYLNAPHTHALENE	UG/L	ND	10
2-METHYLNAPHTHALENE	UG/L	ND	10
NAPHTHALENE	UG/L	ND	10
1,4-NAPHTHOQUINONE	UG/L	ND	10
1-NAPHTHYLAMINE	UG/L	ND	10
2-NAPHTHYLAMINE	UG/L	ND	10
2-NITROANILINE	UG/L	ND	50
3-NITROANILINE	UG/L	ND	50
4-NITROANILINE	UG/L	ND	50
NITROBENZENE	UG/L	ND	10
5-NITRO-O-TOLUIDINE	UG/L	ND	10
4-NITROQUINOLINE-1-OXIDE	UG/L	ND	10
N-NITROSODIETHYLAMINE	UG/L	ND	10
N-NITROSODIMETHYLAMINE	UG/L	ND	10

ANALYTICAL TECHNOLOGIES, INC. 11 East Olive Road Pensacola, Florida 32514 (904) 474-1001

"QC Report"

Title: Water Blank
Batch: ALW024
Analysis Method: 8270 / SW-846, 3rd Edition, September 1986 and Rev. 1, July 1992.
Extraction Method: 3520 / SW-846, 3rd Edition, September 1986 and Rev. 1, July, 1992.

Parameters:	Units:	Results:	Reporting Limits:
N-NITROSODI-N-BUTYLAMINE	UG/L	ND	10
N-NITROSODIPHENYLAMINE	UG/L	ND	10
N-NITROSOMETHYLETHYLAMINE	UG/L	ND	10
N-NITROSOMORPHOLINE	UG/L	ND	10
N-NITROSOPIPERIDINE	UG/L	ND	10
N-NITROSOPYRROLIDINE	UG/L	ND	10
PARATHION	UG/L	ND	10
PENTACHLOROBENZENE	UG/L	ND	10
PENTACHLOROETHANE	UG/L	ND	10
PENTACHLORONITROBENZENE	UG/L	ND	10
PHENACETIN	UG/L	ND	10
PHENANTHRENE	UG/L	ND	10
2-PICOLINE	UG/L	ND	10
P-PHENYLENEDIAMINE	UG/L	ND	10
PRONAMIDE	UG/L	ND	10
PYRENE	UG/L	ND	10
PYRIDINE	UG/L	ND	10
SAFROLE	UG/L	ND	10
SULFOTEPP	UG/L	ND	10
1,2,4,5-TETRACHLOROBENZENE	UG/L	ND	10
THIONAZIN	UG/L	ND	10
O-TOLUIDINE	UG/L	ND	10
1,2,4 TRICHLOROBENZENE	UG/L	ND	10
SYM-TRINITROBENZENE	UG/L	ND	10
O,O,O-TRIETHYL PHOSPHOROTHIATE	UG/L	ND	10
BENZIDINE	UG/L	ND	10
BIS(2-CHLOROISOPROPYL)ETHER	UG/L	ND	10
2-(SEC BUTYL)4,6-DINITRO-PHENOL(DINOSEB)	UG/L	ND	10
N-NITROSO-DI-N-PROPYLAMINE	UG/L	ND	10
2-FLUOROBIPHENYL	%REC/SURR	56	43-116
TERPHENYL-D14	%REC/SURR	64	33-124
NITROBENZENE-D5	%REC/SURR	59	35-114
2-FLUOROPHENOL	%REC/SURR	56	21-100
PHENOL-D6	%REC/SURR	50	10-100
2,4,6-TRIBROMOPHENOL	%REC/SURR	45	10-123
ANALYST	INITIALS	PL	

Comments:

"QC Report"

Title: Soil Blank
Batch: ALS021
Analysis Method: 8270 / SW-846, 3rd Edition, September 1986 and Rev. 1, July 1992.
Extraction Method: 3520 / SW-846, 3rd Edition, September 1986 and Rev. 1, July, 1992.

Blank Id: A Date Analyzed: 03-APR-96 Date Extracted: 19-MAR-96

Parameters:	Units:	Results:	Reporting Limits:
P-CHLORO-M-CRESOL	UG/KG	ND	10
2-CHLOROPHENOL	UG/KG	ND	10
O-CRESOL	UG/KG	ND	10
M,P CRESOL	UG/KG	ND	10
2,4-DICHLOROPHENOL	UG/KG	ND	10
2,6-DICHLOROPHENOL	UG/KG	ND	10
2,4-DIMETHYLPHENOL	UG/KG	ND	10
4,6-DINITRO-O-CRESOL	UG/KG	ND	50
2,4-DINITROPHENOL	UG/KG	ND	10
2-NITROPHENOL	UG/KG	ND	10
4-NITROPHENOL	UG/KG	ND	50
PENTACHLOROPHENOL	UG/KG	ND	50
PHENOL	UG/KG	ND	10
2,3,4,6-TETRACHLOROPHENOL	UG/KG	ND	10
2,4,5-TRICHLOROPHENOL	UG/KG	ND	50
2,4,6-TRICHLOROPHENOL	UG/KG	ND	10
ACENAPHTHENE	UG/KG	ND	10
ACENAPHTHYLENE	UG/KG	ND	10
ACETOPHENONE	UG/KG	ND	10
2-ACETYLAMINOFLUORENE	UG/KG	ND	10
4-AMINOBIPHENYL	UG/KG	ND	10
ANILINE	UG/KG	ND	10
ANTHRACENE	UG/KG	ND	10
ARAMITE	UG/KG	ND	10
BENZO (A) ANTHRACENE	UG/KG	ND	10
BENZO (A) PYRENE	UG/KG	ND	10
BENZO (B) FLUORANTHENE	UG/KG	ND	10
BENZO (G,H,I) PERYLENE	UG/KG	ND	10
BENZO (K) FLUORANTHENE	UG/KG	ND	10
BENZYL ALCOHOL	UG/KG	ND	10
BIS(2-CHLORO-1-METHYLETHYL)ETHER	UG/KG	ND	10
BIS(2-CHLOROETHOXY)METHANE	UG/KG	ND	10
BIS(2-CHLOROETHYL)ETHER	UG/KG	ND	10
BIS(2-ETHYLHEXYL)PHTHALATE	UG/KG	ND	10
4-BROMOPHENYL PHENYL ETHER	UG/KG	ND	10
BUTYLBENZYL PHTHALATE	UG/KG	ND	10
P-CHLOROANILINE	UG/KG	ND	10
CHLOROBENZILATE	UG/KG	ND	10
2-CHLORONAPHTHALENE	UG/KG	ND	10
4-CHLOROPHENYL PHENYL ETHER	UG/KG	ND	10
CHRYSENE	UG/KG	ND	10
DIALLATE	UG/KG	ND	10
DIBENZO (A,H) ANTHRACENE	UG/KG	ND	10
DIBENZOFURAN	UG/KG	ND	10
1,2-DICHLOROBENZENE	UG/KG	ND	10
1,3-DICHLOROBENZENE	UG/KG	ND	10

"QC Report"

Title: Soil Blank
Batch: ALS021
Analysis Method: 8270 / SW-846, 3rd Edition, September 1986 and Rev. 1, July 1992.
Extraction Method: 3520 / SW-846, 3rd Edition, September 1986 and Rev. 1, July, 1992.

Parameters:	Units:	Results:	Reporting Limits:
1,4-DICHLOROBENZENE	UG/KG	ND	10
3,3'-DICHLOROBENZIDINE	UG/KG	ND	50
DIETHYLPHTHALATE	UG/KG	ND	10
DIMETHOATE	UG/KG	ND	10
P-DIMETHYLAMINOAZOBENZENE	UG/KG	ND	10
7,12-DIMETHYLBENZ(A)ANTHRACENE	UG/KG	ND	10
3,3'-DIMETHYLBENZIDINE	UG/KG	ND	10
A,A-DIMETHYLPHENETHYLAMINE	UG/KG	ND	10
DIMETHYLPHTHALATE	UG/KG	ND	10
DI-N-BUTYLPHTHALATE	UG/KG	ND	10
M-DINITROBENZENE	UG/KG	ND	10
2,4-DINITROTOLUENE	UG/KG	ND	10
2,6-DINITROTOLUENE	UG/KG	ND	10
DI-N-OCTYLPHTHALATE	UG/KG	ND	10
DIPHENYLAMINE	UG/KG	ND	10
ETHYL METHANESULFONATE	UG/KG	ND	10
FAMPHUR	UG/KG	ND	10
FLUORANTHENE	UG/KG	ND	10
FLUORENE	UG/KG	ND	10
HEXACHLOROBENZENE	UG/KG	ND	10
HEXACHLOROBUTADIENE	UG/KG	ND	10
HEXACHLOROCYCLOPENTADIENE	UG/KG	ND	10
HEXACHLOROETHANE	UG/KG	ND	10
HEXACHLOROPHENE	UG/KG	ND	10
HEXACHLOROPROPENE	UG/KG	ND	10
INDENO (1,2,3-CD) PYRENE	UG/KG	ND	10
ISODRIN	UG/KG	ND	10
ISOPHORONE	UG/KG	ND	10
ISOSAFROLE	UG/KG	ND	10
KEPONE	UG/KG	ND	10
METHAPYRILENE	UG/KG	ND	10
3-METHYLCHOLANTHRENE	UG/KG	ND	10
METHYL METHANESULFONATE	UG/KG	ND	10
1-METHYLNAPHTHALENE	UG/KG	ND	10
2-METHYLNAPHTHALENE	UG/KG	ND	10
NAPHTHALENE	UG/KG	ND	10
1,4-NAPHTHOQUINONE	UG/KG	ND	10
1-NAPHTHYLAMINE	UG/KG	ND	10
2-NAPHTHYLAMINE	UG/KG	ND	10
2-NITROANILINE	UG/KG	ND	50
3-NITROANILINE	UG/KG	ND	50
4-NITROANILINE	UG/KG	ND	50
NITROBENZENE	UG/KG	ND	10
5-NITRO-O-TOLUIDINE	UG/KG	ND	10
4-NITROQUINOLINE-1-OXIDE	UG/KG	ND	10
N-NITROSODIETHYLAMINE	UG/KG	ND	10
N-NITROSODIMETHYLAMINE	UG/KG	ND	10

ANALYTICAL TECHNOLOGIES, INC. 11 East Olive Road Pensacola, Florida 32514 (904) 474-1001

"QC Report"

Title: Soil Blank
Batch: ALS021
Analysis Method: 8270 / SW-846, 3rd Edition, September 1986 and Rev. 1, July 1992.
Extraction Method: 3520 / SW-846, 3rd Edition, September 1986 and Rev. 1, July, 1992.

Parameters:	Units:	Results:	Reporting Limits:
N-NITROSODI-N-BUTYLAMINE	UG/KG	ND	10
N-NITROSODIPHENYLAMINE	UG/KG	ND	10
N-NITROSOMETHYLETHYLAMINE	UG/KG	ND	10
N-NITROSOMORPHOLINE	UG/KG	ND	10
N-NITROSOPIPERIDINE	UG/KG	ND	10
N-NITROSOPYRROLIDINE	UG/KG	ND	10
PARATHION	UG/KG	ND	10
PENTACHLOROBENZENE	UG/KG	ND	10
PENTACHLOROETHANE	UG/KG	ND	10
PENTACHLORONITROBENZENE	UG/KG	ND	10
PHENACETIN	UG/KG	ND	10
PHENANTHRENE	UG/KG	ND	10
2-PICOLINE	UG/KG	ND	10
P-PHENYLENEDIAMINE	UG/KG	ND	10
PRONAMIDE	UG/KG	ND	10
PYRENE	UG/KG	ND	10
PYRIDINE	UG/KG	ND	10
SAFROLE	UG/KG	ND	10
SULFOTEPP	UG/KG	ND	10
1,2,4,5-TETRACHLOROBENZENE	UG/KG	ND	10
THIONAZIN	UG/KG	ND	10
O-TOLUIDINE	UG/KG	ND	10
1,2,4 TRICHLOROBENZENE	UG/KG	ND	10
SYM-TRINITROBENZENE	UG/KG	ND	10
O,O,O-TRIETHYL PHOSPHOROTHIATE	UG/KG	ND	10
BENZIDINE	UG/KG	ND	10
BIS(2-CHLOROISOPROPYL)ETHER	UG/KG	ND	10
2-(SEC BUTYL)4,6-DINITRO-PHENOL(DINOSEB)	UG/KG	ND	10
N-NITROSO-DI-N-PROPYLAMINE	UG/KG	ND	10
2-FLUOROBIPHENYL	%REC/SURR	76	30-115
TERPHENYL-D14	%REC/SURR	90	18-137
NITROBENZENE-D5	%REC/SURR	66	23-120
2-FLUOROPHENOL	%REC/SURR	71	25-121
PHENOL-D6	%REC/SURR	68	24-113
2,4,6-TRIBROMOPHENOL	%REC/SURR	70	19-122
ANALYST	INITIALS	PL	

Comments:

"QC Report"

Title: Soil Reagent
Batch: ALS021
Analysis Method: 8270 / SW-846, 3rd Edition, September 1986 and Rev. 1, July 1992.
Extraction Method: 3520 / SW-846, 3rd Edition, September 1986 and Rev. 1, July, 1992.

RS Date Analyzed: 03-APR-96
RSD Date Analyzed: 03-APR-96

RS Date Extracted: 19-MAR-96
RSD Date Extracted: 19-MAR-96

Parameters:	Spike Added	Sample Conc	RS Conc	RS %Rec	RSD Conc	RSD %Rec	RPD	RPD Lmts	Rec Lmts
PHENOL	3333	<330	2200	66	2500	75	13	27	5-112
2-CHLOROPHENOL	3333	<330	2200	66	2533	76	14	32	38-123
1,4-DICHLOROBENZENE	1667	<330	1200	72	1400	84	15	25	50-111
N-NITRO-DI-N-PROPYLAMINE	1667	<330	1100	66	1200	72	9	25	39-121
1,2,4 TRICHLOROBENZENE	1667	<330	1200	72	1367	82	13	24	49-115
4-CHLORO-3-METHYLPHENOL	3333	<330	2400	72	2633	79	9	26	37-128
ACENAPHTHENE	1667	<330	1333	80	1367	82	2	19	53-115
4-NITROPHENOL	3333	<1700	2300	69	2400	72	4	50	32-126
2,4-DINITROTOLUENE	1667	<330	1167	70	1233	74	6	21	56-118
PENTACHLOROPHENOL	3333	<1700	2700	81	2800	84	4	20	31-146
PYRENE	1667	<330	1067	64	1133	68	6	23	52-115
Surrogates:									
NITROBENZENE-D5				75		84			23-120
2-FLUOROBIPHENYL				84		89			30-115
TERPHENYL-D14				92		94			18-137
PHENOL-D6				76		86			24-113
2-FLUOROPHENOL				77		86			25-121
2,4,6-TRIBROMOPHENOL				79		81			19-122

Comments:

Notes:
N/S = NOT SUBMITTED N/A = NOT APPLICABLE D = DILUTED OUT
UG/KG = PARTS PER BILLION. < = LESS THAN REPORTING LIMIT.
* = VALUES OUTSIDE OF QUALITY CONTROL LIMITS.
SOURCES FOR CONTROL LIMITS ARE INTERNAL LABORATORY QUALITY ASSURANCE PROGRAM AND REFERENCED METHOD.

"QC Report"

Title: Water Matrix
Batch: ALW024
Analysis Method: 8270 / SW-846, 3rd Edition, September 1986 and Rev. 1, July 1992.
Extraction Method: 3520 / SW-846, 3rd Edition, September 1986 and Rev. 1, July, 1992.

Dry Weight %: N/A
Sample Spiked: 603270-1

MS Date Analyzed: 26-MAR-96
MSD Date Analyzed: 26-MAR-96

MS Date Extracted: 18-MAR-96
MSD Date Extracted: 18-MAR-96

Parameters:	Spike Added	Sample Conc	MS Conc	MS %Rec	MSD Conc	MSD %Rec	RPD	RPD Lmts	Rec Lmts
PHENOL	400	<10	156	39	156	39	0	38	5-112
2-CHLOROPHENOL	400	<10	176	44	172	43	2	25	38-120
1,4-DICHLOROBENZENE	200	<10	92	46	92	46	0	27	39-112
N-NITRO-DI-N-PROPYLAMINE	200	<10	88	44	88	44	0	30	32-125
1,2,4 TRICHLOROBENZENE	200	<10	100	50	96	48	4	30	44-118
4-CHLORO-3-METHYLPHENOL	400	<10	168	42	172	43	2	23	42-131
ACENAPHTHENE	200	<10	104	52	104	52	0	21	47-131
4-NITROPHENOL	400	<50	168	42	156	39	7	36	1-116
2,4-DINITROTOLUENE	200	<10	88	44	88	44	0	22	39-138
PENTACHLOROPHENOL	400	<50	144	36	144	36	0	36	14-164
PYRENE	200	<10	112	56	104	52	7	21	52-115
Surrogates:									
NITROBENZENE-D5				62		65			35-114
2-FLUOROBIPHENYL				62		67			43-116
TERPHENYL-D14				58		63			33-124
PHENOL-D6				87		90			10-100
2-FLUOROPHENOL				81		93			21-100
2,4,6-TRIBROMOPHENOL				99		98			10-123

Comments:

Notes:
N/S = NOT SUBMITTED N/A = NOT APPLICABLE D = DILUTED OUT
UG/L = PARTS PER BILLION. < = LESS THAN REPORTING LIMIT.
* = VALUES OUTSIDE OF QUALITY CONTROL LIMITS.
SOURCES FOR CONTROL LIMITS ARE INTERNAL LABORATORY QUALITY ASSURANCE PROGRAM AND REFERENCED METHOD.

"QC Report"

Title: Soil Matrix
Batch: ALS021
Analysis Method: 8270 / SW-846, 3rd Edition, September 1986 and Rev. 1, July 1992.
Extraction Method: 3520 / SW-846, 3rd Edition, September 1986 and Rev. 1, July, 1992.

Dry Weight %: 74
Sample Spiked: 603254-11

MS Date Analyzed: 10-APR-96
MSD Date Analyzed: 10-APR-96

MS Date Extracted: 19-MAR-96
MSD Date Extracted: 19-MAR-96

Parameters:	Spike Added	Sample Conc	MS Conc	MS %Rec	MSD Conc	MSD %Rec	RPD	RPD Lmts	Rec Lmts
PHENOL	44	<330	29	65	25	56	15	22	40-103
2-CHLOROPHENOL	44	<330	31	69	28	62	11	27	39-104
1,4-DICHLOROBENZENE	22	<330	16	72	16	70	3	27	43-109
N-NITRO-DI-N-PROPYLAMINE	22	<330	12	54	9	42	25	27	29-117
1,2,4 TRICHLOROBENZENE	22	<330	15	70	15	66	6	21	49-126
4-CHLORO-3-METHYLPHENOL	44	<330	26	58	20	44	27	28	32-117
ACENAPHTHENE	22	<330	16	72	14	64	12	20	47-126
4-NITROPHENOL	44	<1700	20	45	14	32	34	42	1-124
2,4-DINITROTOLUENE	22	<330	15	66	13	56	16	23	43-110
PENTACHLOROPHENOL	44	<1700	27	60	23	52	14	33	14-144
PYRENE	22	<330	15	70	13	58	19	31	52-115
Surrogates:									
NITROBENZENE-D5				62		70			23-120
2-FLUOROBIPHENYL				64		74			30-115
TERPHENYL-D14				70		79			18-137
PHENOL-D6				57		67			24-113
2-FLUOROPHENOL				60		71			25-121
2,4,6-TRIBROMOPHENOL				53		64			19-122

Comments:

Notes:
N/S = NOT SUBMITTED N/A = NOT APPLICABLE D = DILUTED OUT
UG/KG = PARTS PER BILLION. < = LESS THAN REPORTING LIMIT.
* = VALUES OUTSIDE OF QUALITY CONTROL LIMITS.
SOURCES FOR CONTROL LIMITS ARE INTERNAL LABORATORY QUALITY ASSURANCE PROGRAM AND REFERENCED METHOD.

Common notation for Organic reporting

N/S = NOT SUBMITTED
N/A = NOT APPLICABLE
D = DILUTED OUT
UG/L = PARTS PER BILLION.
UG/KG = PARTS PER BILLION.
MG/KG = PARTS PER MILLION.
MG/L = PARTS PER MILLION.
MG/M3 = MILLIGRAMS PER CUBIC METER.
NG = NANOGRAMS.
UG = MICROGRAMS.
PPBV = PARTS PER BILLION/VOLUME.
< = LESS THAN DETECTION LIMIT.
* = VALUES OUTSIDE OF QUALITY CONTROL LIMITS
J = THE REPORTED VALUE IS EITHER LESS THAN THE REPORTING LIMIT BUT GREATER THAN ZERO, OR QUANTITATED AS A TIC; THEREFORE, IT IS ESTIMATED.
JJ = REPORTED VALUE IS ESTIMATED DUE TO MATRIX INTERFERENCE.
ND = NOT DETECTED ABOVE REPORT LIMIT.
RPT LIMIT = REPORTING LIMITS BASED ON METHOD DETECTION LIMIT STUDIES.
RPD = RELATIVE PERCENT DIFFERENCE (OR DEVIATION)

SOURCES FOR CONTROL LIMITS ARE INTERNAL LABORATORY QUALITY ASSURANCE PROGRAM AND REFERENCED METHOD.

ORGANIC SOILS ARE REPORTED ON A DRY WEIGHT BASIS.

DUE TO THE NATURE OF THE SAMPLE MATRIX, MATRIX SPIKE/MATRIX SPIKE DUPLICATE ANALYSIS CANNOT BE PERFORMED FOR AIR ANALYSIS.

CLP SOW 1991, USEPA CONTRACT LABORATORY PROGRAM, STATEMENT OF WORK FOR ORGANICS ANALYSIS, DOCUMENT NUMBER OLM01.8, AUGUST 1991.

LP = LEVERNE PETERSON	RW = RITA WINGO
DWB = DAVID BOWERS	LD = LARRY DILMORE
DB = DENNIS BESON	DC = DAVID CELESTIAL
LL = LANCE LARSON	RB = RAFAEL BARRAZA
JA = JENNIFER ALEXANDER	PL = PAUL LESCHENSKY

ANALYTICAL TECHNOLOGIES, INC. 11 East Olive Road Pensacola, Florida 32514 (904) 474-1001

Quality Control Report

Analysis: SW 846 8260 TABLE SIX

Accession:	603602
Client:	CSX TRANSPORTATION
Project Number:	4365B
Project Name:	CSXT-GREENVILLE
Project Location:	GREENVILLE, SC
Department:	ORGANIC/MS

ANALYTICAL TECHNOLOGIES, INC. 11 East Olive Road Pensacola, Florida 32514 (904) 474-1001

Date 12-Apr-96

"QC Report"

Title: Low Soil Blank
Batch: MAS038
Analysis Method: 8260 / SW-846, 3rd Edition, September 1986 and Rev. 1, July 1992.
Extraction Method: N/A

Blank Id: A Date Analyzed: 08-APR-96 Date Extracted: N/A

Parameters:	Units:	Results:	Reporting Limits:
ACROLEIN	UG/KG	ND	100
ACETONE	UG/KG	ND	10
ACETONITRILE	UG/KG	ND	100
ACRYLONITRILE	UG/KG	ND	100
ALLYL CHLORIDE	UG/KG	ND	100
BENZENE	UG/KG	ND	5
BROMOCHLOROMETHANE	UG/KG	ND	5
BROMOBENZENE	UG/KG	ND	5
BROMODICHLOROMETHANE	UG/KG	ND	5
BROMOFORM	UG/KG	ND	5
BROMOMETHANE	UG/KG	ND	5
2-BUTANONE	UG/KG	ND	5
CARBON DISULFIDE	UG/KG	ND	5
CHLOROPRENE	UG/KG	ND	5
CARBON TETRACHLORIDE	UG/KG	ND	5
CHLOROBENZENE	UG/KG	ND	5
CHLOROETHANE	UG/KG	ND	5
CHLOROFORM	UG/KG	ND	5
CHLOROMETHANE	UG/KG	ND	5
2-CHLOROTOLUENE	UG/KG	ND	5
4-CHLOROTOLUENE	UG/KG	ND	5
CIS 1,2 DICHLOROETHYLENE	UG/KG	ND	5
CHLORODIBROMOMETHANE	UG/KG	ND	5
1,2 DIBROMOETHANE	UG/KG	ND	5
1,2-DIBROMO-3-CHLOROPROPANE	UG/KG	ND	5
1,4-DICHLORO-2-BUTENE	UG/KG	ND	5
DIBROMOMETHANE	UG/KG	ND	5
1,4-DICHLOROBENZENE	UG/KG	ND	5
1,3-DICHLOROBENZENE	UG/KG	ND	5
1,2-DICHLOROBENZENE	UG/KG	ND	5
DICHLORODIFLUOROMETHANE	UG/KG	ND	5
1,1-DICHLOROETHANE	UG/KG	ND	5
1,2-DICHLOROETHANE	UG/KG	ND	5
1,1-DICHLOROETHENE	UG/KG	ND	5
1,3 DICHLOROPROPANE	UG/KG	ND	5
2,2-DICHLOROPROPANE	UG/KG	ND	5
1,2-DICHLOROPROPANE	UG/KG	ND	5
CIS-1,3-DICHLOROPROPENE	UG/KG	ND	5
TRANS-1,3-DICHLOROPROPENE	UG/KG	ND	5
1,1 DICHLOROPROPENE	UG/KG	ND	5
ETHYL BENZENE	UG/KG	ND	5
METHYL METHACRYLATE	UG/KG	ND	5
METHACRYLONITRILE	UG/KG	ND	5
4-METHYL-2-PENTANONE	UG/KG	ND	5
HEXACHLOROBUTADIENE	UG/KG	ND	5
2-HEXANONE	UG/KG	ND	5

"QC Report"

Title: Low Soil Blank
Batch: MAS038
Analysis Method: 8260 / SW-846, 3rd Edition, September 1986 and Rev. 1, July 1992.
Extraction Method: N/A

Parameters:	Units:	Results:	Reporting Limits:
ISOPROPYL BENZENE	UG/KG	ND	5
ISOBUTYL ALCOHOL	UG/KG	ND	10
IODOMETHANE	UG/KG	ND	5
P-ISOPROPYLTOLUENE	UG/KG	ND	5
METHYLENE CHLORIDE	UG/KG	ND	5
NAPHTHALENE	UG/KG	ND	5
N-BUTYL BENZENE	UG/KG	ND	5
N-PROPYL BENZENE	UG/KG	ND	5
PROPIONITRILE	UG/KG	ND	5
SEC-BUTYL BENZENE	UG/KG	ND	5
STYRENE	UG/KG	ND	5
TERT-BUTYL BENZENE	UG/KG	ND	5
1,1,1,2-TETRACHLOROETHANE	UG/KG	ND	5
1,1,2,2-TETRACHLOROETHANE	UG/KG	ND	5
TETRACHLOROETHENE	UG/KG	ND	5
TOLUENE	UG/KG	ND	5
TOLUENE DIISOCYANATE	UG/KG	ND	10
TOLUENE DIAMINE	UG/KG	ND	10
TRANS 1,2 DICHLOROETHYLENE	UG/KG	ND	5
1,1,1-TRICHLOROETHANE	UG/KG	ND	5
1,1,2-TRICHLOROETHANE	UG/KG	ND	5
1,2,3 TRICHLOROBENZENE	UG/KG	ND	5
1,2,4 TRICHLOROBENZENE	UG/KG	ND	5
TRICHLOROETHENE	UG/KG	ND	5
TRICHLOROFLUOROMETHANE	UG/KG	ND	5
1,2,3 TRICHLOROPROPANE	UG/KG	ND	5
1,2,4-TRIMETHYLBENZENE	UG/KG	ND	5
1,3,5-TRIMETHYLBENZENE	UG/KG	ND	5
VINYL ACETATE	UG/KG	ND	5
VINYL CHLORIDE	UG/KG	ND	5
M,P-XYLENE	UG/KG	ND	5
O-XYLENE	UG/KG	ND	5
DIBROMOFLUOROMETHANE	%REC/SURR	101	80-120
TOLUENE-D8	%REC/SURR	99	81-117
BROMOFLUOROBENZENE	%REC/SURR	96	74-121
ANALYST	INITIALS	LL	

Comments:

"QC Report"

Title: Low Soil Reagent
Batch: MAS038
Analysis Method: 8260 / SW-846, 3rd Edition, September 1986 and Rev. 1, July 1992.
Extraction Method: N/A

RS Date Analyzed: 08-APR-96
RSD Date Analyzed: 08-APR-96

RS Date Extracted: N/A
RSD Date Extracted: N/A

Parameters:	Spike Added	Sample Conc	RS Conc	RS %Rec	RSD Conc	RSD %Rec	RPD	RPD Lmts	Rec Lmts
1,1-DICHLOROETHENE	50	<5	56	112	59	118	5	30	1-234
TRICHLOROETHENE	50	<5	50	100	49	98	2	30	71-157
BENZENE	50	<5	56	112	56	112	0	30	37-151
TOLUENE	50	<5	50	100	48	96	4	30	47-150
CHLOROBENZENE	50	<5	51	102	48	96	6	30	37-160
Surrogates:									
DIBROMOFLUOROMETHANE				103		115			80-120
TOLUENE-D8				104		103			81-117
BROMOFLUOROBENZENE				103		107			74-121

Comments:

Notes:
N/S = NOT SUBMITTED N/A = NOT APPLICABLE D = DILUTED OUT
UG/KG = PARTS PER BILLION. < = LESS THAN REPORTING LIMIT.
* = VALUES OUTSIDE OF QUALITY CONTROL LIMITS.
SOURCES FOR CONTROL LIMITS ARE INTERNAL LABORATORY QUALITY ASSURANCE PROGRAM AND REFERENCED METHOD.

"QC Report"

Title: Low Soil Matrix
Batch: MAS038
Analysis Method: 8260 / SW-846, 3rd Edition, September 1986 and Rev. 1, July 1992.
Extraction Method: N/A

Dry Weight %: 85
Sample Spiked: 603602-5

MS Date Analyzed: 08-APR-96
MSD Date Analyzed: 08-APR-96

MS Date Extracted: N/A
MSD Date Extracted: N/A

Parameters:	Spike Added	Sample Conc	MS Conc	MS %Rec	MSD Conc	MSD %Rec	RPD	RPD Lmts	Rec Lmts
1,1-DICHLOROETHENE	59	<5.9	52	88	54	92	4	42	1-234
TRICHLOROETHENE	59	<5.9	58	98	59	100	2	20	71-157
BENZENE	59	<5.9	55	93	51	86	8	20	37-151
TOLUENE	59	<5.9	52	88	52	88	0	44	47-150
CHLOROBENZENE	59	<5.9	59	100	59	100	0	20	37-160
Surrogates:									
DIBROMOFLUOROMETHANE				101		98			80-120
TOLUENE-D8				88		87			81-117
BROMOFLUOROBENZENE				109		111			74-121

Comments:

Notes:
N/S = NOT SUBMITTED N/A = NOT APPLICABLE D = DILUTED OUT
UG/KG = PARTS PER BILLION. < = LESS THAN REPORTING LIMIT.
* = VALUES OUTSIDE OF QUALITY CONTROL LIMITS.
SOURCES FOR CONTROL LIMITS ARE INTERNAL LABORATORY QUALITY ASSURANCE PROGRAM AND REFERENCED METHOD.

Common notation for Organic reporting

N/S = NOT SUBMITTED
N/A = NOT APPLICABLE
D = DILUTED OUT
UG/L = PARTS PER BILLION.
UG/KG = PARTS PER BILLION.
MG/KG = PARTS PER MILLION.
MG/L = PARTS PER MILLION.
MG/M3 = MILLIGRAMS PER CUBIC METER.
NG = NANOGRAMS.
UG = MICROGRAMS.
PPBV = PARTS PER BILLION/VOLUME.
< = LESS THAN DETECTION LIMIT.
* = VALUES OUTSIDE OF QUALITY CONTROL LIMITS
J = THE REPORTED VALUE IS EITHER LESS THAN THE REPORTING LIMIT BUT GREATER THAN ZERO, OR QUANTITATED AS A TIC; THEREFORE, IT IS ESTIMATED.
JJ = REPORTED VALUE IS ESTIMATED DUE TO MATRIX INTERFERENCE.
ND = NOT DETECTED ABOVE REPORT LIMIT.
RPT LIMIT = REPORTING LIMITS BASED ON METHOD DETECTION LIMIT STUDIES.
RPD = RELATIVE PERCENT DIFFERENCE (OR DEVIATION)

SOURCES FOR CONTROL LIMITS ARE INTERNAL LABORATORY QUALITY ASSURANCE PROGRAM AND REFERENCED METHOD.

ORGANIC SOILS ARE REPORTED ON A DRY WEIGHT BASIS.

DUE TO THE NATURE OF THE SAMPLE MATRIX, MATRIX SPIKE/MATRIX SPIKE DUPLICATE ANALYSIS CANNOT BE PERFORMED FOR AIR ANALYSIS.

CLP SOW 1991, USEPA CONTRACT LABORATORY PROGRAM, STATEMENT OF WORK FOR ORGANICS ANALYSIS, DOCUMENT NUMBER OLM01.8, AUGUST 1991.

LP = LEVERNE PETERSON	RW = RITA WINGO
DWB = DAVID BOWERS	LD = LARRY DILMORE
DB = DENNIS BESON	DC = DAVID CELESTIAL
LL = LANCE LARSON	RB = RAFAEL BARRAZA
JA = JENNIFER ALEXANDER	PL = PAUL LESCHENSKY

AMERICAN ENVIRONMENTAL NETWORK 11 East Olive Road Pensacola, Florida 32514 (904) 474-1001

Quality Control Report

Analysis: BN EXTRACTABLES (8270)

Accession:	603602
Client:	CSX TRANSPORTATION
Project Number:	4365B
Project Name:	CSXT-GREENVILLE
Project Location:	GREENVILLE, SC
Department:	ORGANIC/MS

"QC Report"

Title: Soil Blank
Batch: ALS023
Analysis Method: 8270 / SW-846, 3rd Edition, September 1986 and Rev. 1, July 1992.
Extraction Method: 3550 / SW-846, 3rd Edition, September 1986 and Rev. 1, July 1992.

Blank Id: A Date Analyzed: 04-APR-96 Date Extracted: 01-APR-96

Parameters:	Units:	Results:	Reporting Limits:
P-CHLORO-M-CRESOL	UG/KG	ND	10
2-CHLOROPHENOL	UG/KG	ND	10
O-CRESOL	UG/KG	ND	10
M,P CRESOL	UG/KG	ND	10
2,4-DICHLOROPHENOL	UG/KG	ND	10
2,6-DICHLOROPHENOL	UG/KG	ND	10
2,4-DIMETHYLPHENOL	UG/KG	ND	10
4,6-DINITRO-O-CRESOL	UG/KG	ND	50
2,4-DINITROPHENOL	UG/KG	ND	10
2-NITROPHENOL	UG/KG	ND	10
4-NITROPHENOL	UG/KG	ND	50
PENTACHLOROPHENOL	UG/KG	ND	50
PHENOL	UG/KG	ND	10
2,3,4,6-TETRACHLOROPHENOL	UG/KG	ND	10
2,4,5-TRICHLOROPHENOL	UG/KG	ND	50
2,4,6-TRICHLOROPHENOL	UG/KG	ND	10
ACENAPHTHENE	UG/KG	ND	10
ACENAPHTHYLENE	UG/KG	ND	10
ACETOPHENONE	UG/KG	ND	10
2-ACETYLAMINOFLUORENE	UG/KG	ND	10
4-AMINOBIPHENYL	UG/KG	ND	10
ANILINE	UG/KG	ND	10
ANTHRACENE	UG/KG	ND	10
ARAMITE	UG/KG	ND	10
BENZO (A) ANTHRACENE	UG/KG	ND	10
BENZO (A) PYRENE	UG/KG	ND	10
BENZO (B) FLUORANTHENE	UG/KG	ND	10
BENZO (G,H,I) PERYLENE	UG/KG	ND	10
BENZO (K) FLUORANTHENE	UG/KG	ND	10
BENZYL ALCOHOL	UG/KG	ND	10
BIS(2-CHLORO-1-METHYLETHYL)ETHER	UG/KG	ND	10
BIS(2-CHLOROETHOXY)METHANE	UG/KG	ND	10
BIS(2-CHLOROETHYL)ETHER	UG/KG	ND	10
BIS(2-ETHYLHEXYL)PHTHALATE	UG/KG	ND	10
4-BROMOPHENYL PHENYL ETHER	UG/KG	ND	10
BUTYLBENZYL PHTHALATE	UG/KG	ND	10
P-CHLOROANILINE	UG/KG	ND	10
CHLOROBENZILATE	UG/KG	ND	10
2-CHLORONAPHTHALENE	UG/KG	ND	10
4-CHLOROPHENYL PHENYL ETHER	UG/KG	ND	10
CHRYSENE	UG/KG	ND	10
DIALLATE	UG/KG	ND	10
DIBENZO (A,H) ANTHRACENE	UG/KG	ND	10
DIBENZOFURAN	UG/KG	ND	10
1,2-DICHLOROBENZENE	UG/KG	ND	10
1,3-DICHLOROBENZENE	UG/KG	ND	10

"QC Report"

Title: Soil Blank
Batch: ALS023
Analysis Method: 8270 / SW-846, 3rd Edition, September 1986 and Rev. 1, July 1992.
Extraction Method: 3550 / SW-846, 3rd Edition, September 1986 and Rev. 1, July 1992.

Parameters:	Units:	Results:	Reporting Limits:
1,4-DICHLOROBENZENE	UG/KG	ND	10
3,3'-DICHLOROBENZIDINE	UG/KG	ND	50
DIETHYLPHTHALATE	UG/KG	ND	10
DIMETHOATE	UG/KG	ND	10
P-DIMETHYLAMINOAZOBENZENE	UG/KG	ND	10
7,12-DIMETHYLBENZ(A)ANTHRACENE	UG/KG	ND	10
3,3'-DIMETHYLBENZIDINE	UG/KG	ND	10
A,A-DIMETHYLPHENETHYLAMINE	UG/KG	ND	10
DIMETHYLPHTHALATE	UG/KG	ND	10
DI-N-BUTYLPHTHALATE	UG/KG	ND	10
M-DINITROBENZENE	UG/KG	ND	10
2,4-DINITROTOLUENE	UG/KG	ND	10
2,6-DINITROTOLUENE	UG/KG	ND	10
DI-N-OCTYLPHTHALATE	UG/KG	ND	10
DIPHENYLAMINE	UG/KG	ND	10
ETHYL METHANESULFONATE	UG/KG	ND	10
FAMPHUR	UG/KG	ND	10
FLUORANTHENE	UG/KG	ND	10
FLUORENE	UG/KG	ND	10
HEXACHLOROBENZENE	UG/KG	ND	10
HEXACHLOROBUTADIENE	UG/KG	ND	10
HEXACHLOROCYCLOPENTADIENE	UG/KG	ND	10
HEXACHLOROETHANE	UG/KG	ND	10
HEXACHLOROPHENE	UG/KG	ND	10
HEXACHLOROPROPENE	UG/KG	ND	10
INDENO (1,2,3-CD) PYRENE	UG/KG	ND	10
ISODRIN	UG/KG	ND	10
ISOPHORONE	UG/KG	ND	10
ISOSAFROLE	UG/KG	ND	10
KEPONE	UG/KG	ND	10
METHAPYRILENE	UG/KG	ND	10
3-METHYLCHOLANTHRENE	UG/KG	ND	10
METHYL METHANESULFONATE	UG/KG	ND	10
1-METHYLNAPHTHALENE	UG/KG	ND	10
2-METHYLNAPHTHALENE	UG/KG	ND	10
NAPHTHALENE	UG/KG	ND	10
1,4-NAPHTHOQUINONE	UG/KG	ND	10
1-NAPHTHYLAMINE	UG/KG	ND	10
2-NAPHTHYLAMINE	UG/KG	ND	10
2-NITROANILINE	UG/KG	ND	50
3-NITROANILINE	UG/KG	ND	50
4-NITROANILINE	UG/KG	ND	50
NITROBENZENE	UG/KG	ND	10
5-NITRO-O-TOLUIDINE	UG/KG	ND	10
4-NITROQUINOLINE-1-OXIDE	UG/KG	ND	10
N-NITROSODIETHYLAMINE	UG/KG	ND	10
N-NITROSODIMETHYLAMINE	UG/KG	ND	10

"QC Report"

Title: Soil Blank
Batch: ALS023
Analysis Method: 8270 / SW-846, 3rd Edition, September 1986 and Rev. 1, July 1992.
Extraction Method: 3550 / SW-846, 3rd Edition, September 1986 and Rev. 1, July 1992.

Parameters:	Units:	Results:	Reporting Limits:
N-NITROSODI-N-BUTYLAMINE	UG/KG	ND	10
N-NITROSODIPHENYLAMINE	UG/KG	ND	10
N-NITROSOMETHYLETHYLAMINE	UG/KG	ND	10
N-NITROSOMORPHOLINE	UG/KG	ND	10
N-NITROSOPIPERIDINE	UG/KG	ND	10
N-NITROSOPYRROLIDINE	UG/KG	ND	10
PARATHION	UG/KG	ND	10
PENTACHLOROBENZENE	UG/KG	ND	10
PENTACHLOROETHANE	UG/KG	ND	10
PENTACHLORONITROBENZENE	UG/KG	ND	10
PHENACETIN	UG/KG	ND	10
PHENANTHRENE	UG/KG	ND	10
2-PICOLINE	UG/KG	ND	10
P-PHENYLENEDIAMINE	UG/KG	ND	10
PRONAMIDE	UG/KG	ND	10
PYRENE	UG/KG	ND	10
PYRIDINE	UG/KG	ND	10
SAFROLE	UG/KG	ND	10
SULFOTEPP	UG/KG	ND	10
1,2,4,5-TETRACHLOROBENZENE	UG/KG	ND	10
THIONAZIN	UG/KG	ND	10
O-TOLUIDINE	UG/KG	ND	10
1,2,4 TRICHLOROBENZENE	UG/KG	ND	10
SYM-TRINITROBENZENE	UG/KG	ND	10
O,O,O-TRIETHYL PHOSPHOROTHIATE	UG/KG	ND	10
BENZIDINE	UG/KG	ND	10
BIS(2-CHLOROISOPROPYL)ETHER	UG/KG	ND	10
2-(SEC BUTYL)4,6-DINITRO-PHENOL(DINOSEB)	UG/KG	ND	10
N-NITROSO-DI-N-PROPYLAMINE	UG/KG	ND	10
2-FLUOROBIPHENYL	%REC/SURR	76	30-115
TERPHENYL-D14	%REC/SURR	86	18-137
NITROBENZENE-D5	%REC/SURR	72	23-120
2-FLUOROPHENOL	%REC/SURR	79	25-121
PHENOL-D6	%REC/SURR	73	24-113
2,4,6-TRIBROMOPHENOL	%REC/SURR	74	19-122
ANALYST	INITIALS	PL	

Comments:

"QC Report"

Title: Soil Reagent
Batch: ALS023
Analysis Method: 8270 / SW-846, 3rd Edition, September 1986 and Rev. 1, July 1992.
Extraction Method: 3550 / SW-846, 3rd Edition, September 1986 and Rev. 1, July 1992.

RS Date Analyzed: 08-APR-96
RSD Date Analyzed: 04-APR-96

RS Date Extracted: 01-APR-96
RSD Date Extracted: 01-APR-96

Parameters:	Spike Added	Sample Conc	RS Conc	RS %Rec	RSD Conc	RSD %Rec	RPD	RPD Lmts	Rec Lmts
PHENOL	3333	<330	2433	73	2300	69	6	27	5-112
2-CHLOROPHENOL	3333	<330	2400	72	2633	79	9	32	38-123
1,4-DICHLOROBENZENE	1667	<330	1300	78	1400	84	7	25	50-111
N-NITRO-DI-N-PROPYLAMINE	1667	<330	1100	66	1333	80	19	25	39-121
1,2,4 TRICHLOROBENZENE	1667	<330	1300	78	1400	84	7	24	49-115
4-CHLORO-3-METHYLPHENOL	3333	<330	2500	75	2833	85	12	26	37-128
ACENAPHTHENE	1667	<330	1300	78	1467	88	12	19	53-115
4-NITROPHENOL	3333	<1700	2567	77	2633	79	3	50	32-126
2,4-DINITROTOLUENE	1667	<330	1133	68	1367	82	19	21	56-118
PENTACHLOROPHENOL	3333	<1700	2867	86	2667	80	7	20	31-146
PYRENE	1667	<330	1067	64	1133	68	6	23	52-115
Surrogates:									
NITROBENZENE-D5				72		81			23-120
2-FLUOROBIPHENYL				81		85			30-115
TERPHENYL-D14				83		90			18-137
PHENOL-D6				76		85			24-113
2-FLUOROPHENOL				75		86			25-121
2,4,6-TRIBROMOPHENOL				78		84			19-122

Comments:

Notes:
N/S = NOT SUBMITTED N/A = NOT APPLICABLE D = DILUTED OUT
UG/KG = PARTS PER BILLION. < = LESS THAN REPORTING LIMIT.
* = VALUES OUTSIDE OF QUALITY CONTROL LIMITS.
SOURCES FOR CONTROL LIMITS ARE INTERNAL LABORATORY QUALITY ASSURANCE PROGRAM AND REFERENCED METHOD.

"QC Report"

Title: Soil Matrix
Batch: ALS023
Analysis Method: 8270 / SW-846, 3rd Edition, September 1986 and Rev. 1, July 1992.
Extraction Method: 3550 / SW-846, 3rd Edition, September 1986 and Rev. 1, July 1992.

Dry Weight %: 71
Sample Spiked: 603602-1

MS Date Analyzed: 04-APR-96
MSD Date Analyzed: 04-APR-96

MS Date Extracted: 01-APR-96
MSD Date Extracted: 01-APR-96

Parameters:	Spike Added	Sample Conc	MS Conc	MS %Rec	MSD Conc	MSD %Rec	RPD	RPD Lmts	Rec Lmts
PHENOL	47	<35	23	49	24	51	4	22	40-103
2-CHLOROPHENOL	47	<35	28	60	29	62	3	27	39-104
1,4-DICHLOROBENZENE	23	<14	15	65	16	70	7	27	43-109
N-NITRO-DI-N-PROPYLAMINE	23	<14	14	61	15	65	6	27	29-117
1,2,4 TRICHLOROBENZENE	23	<14	16	70	17	74	6	21	49-126
4-CHLORO-3-METHYLPHENOL	47	<35	22	47	23	49	4	28	32-117
ACENAPHTHENE	23	<14	16	70	18	78	11	20	47-126
4-NITROPHENOL	47	<35	28	60	35	74	21	42	1-124
2,4-DINITROTOLUENE	23	<14	15	65	18	78	18	23	43-110
PENTACHLOROPHENOL	47	<35	32	68	38	81	17	33	14-144
PYRENE	23	<14	14	61	16	70	14	31	52-115
Surrogates:									
NITROBENZENE-D5				65		71			23-120
2-FLUOROBIPHENYL				70		76			30-115
TERPHENYL-D14				72		83			18-137
PHENOL-D6				59		63			24-113
2-FLUOROPHENOL				55		59			25-121
2,4,6-TRIBROMOPHENOL				54		62			19-122

Comments:

Notes:
N/S = NOT SUBMITTED N/A = NOT APPLICABLE D = DILUTED OUT
UG/KG = PARTS PER BILLION. < = LESS THAN REPORTING LIMIT.
* = VALUES OUTSIDE OF QUALITY CONTROL LIMITS.
SOURCES FOR CONTROL LIMITS ARE INTERNAL LABORATORY QUALITY ASSURANCE PROGRAM AND REFERENCED METHOD.

Common notation for Organic reporting

N/S = NOT SUBMITTED
N/A = NOT APPLICABLE
D = DILUTED OUT
UG/L = PARTS PER BILLION.
UG/KG = PARTS PER BILLION.
MG/KG = PARTS PER MILLION.
MG/L = PARTS PER MILLION.
MG/M3 = MILLIGRAMS PER CUBIC METER.
NG = NANOGRAMS.
UG = MICROGRAMS.
PPBV = PARTS PER BILLION/VOLUME.
< = LESS THAN DETECTION LIMIT.
* = VALUES OUTSIDE OF QUALITY CONTROL LIMITS
J = THE REPORTED VALUE IS EITHER LESS THAN THE REPORTING LIMIT BUT GREATER THAN ZERO, OR QUANTITATED AS A TIC; THEREFORE, IT IS ESTIMATED.
JJ = REPORTED VALUE IS ESTIMATED DUE TO MATRIX INTERFERENCE.
ND = NOT DETECTED ABOVE REPORT LIMIT.
RPT LIMIT = REPORTING LIMITS BASED ON METHOD DETECTION LIMIT STUDIES.
RPD = RELATIVE PERCENT DIFFERENCE (OR DEVIATION)

SOURCES FOR CONTROL LIMITS ARE INTERNAL LABORATORY QUALITY ASSURANCE PROGRAM AND REFERENCED METHOD.

ORGANIC SOILS ARE REPORTED ON A DRY WEIGHT BASIS.

DUE TO THE NATURE OF THE SAMPLE MATRIX, MATRIX SPIKE/MATRIX SPIKE DUPLICATE ANALYSIS CANNOT BE PERFORMED FOR AIR ANALYSIS.

CLP SOW 1991, USEPA CONTRACT LABORATORY PROGRAM, STATEMENT OF WORK FOR ORGANICS ANALYSIS, DOCUMENT NUMBER OLM01.8, AUGUST 1991.

LP = LEVERNE PETERSON	RW = RITA WINGO
DWB = DAVID BOWERS	LD = LARRY DILMORE
DB = DENNIS BESON	DC = DAVID CELESTIAL
LL = LANCE LARSON	RB = RAFAEL BARRAZA
JA = JENNIFER ALEXANDER	PL = PAUL LESCHENSKY

ANALYTICAL TECHNOLOGIES, INC. 11 East Olive Road Pensacola, Florida 32514 (904) 474-1001

Quality Control Report

Analysis: Group of Single Wetchem

Accession:	603254
Client:	CSX TRANSPORTATION
Project Number:	4365B
Project Name:	CSX GREENVILLE
Project Location:	GREENVILLE, SC
Department:	WET CHEM

ANALYTICAL TECHNOLOGIES, INC. 11 East Olive Road Pensacola, Florida 32514 (904) 474-1001

"WetChem Quality Control Report"

Parameter:	SULFATE
Batch Id:	SEW016
Blank Result:	<10
Anal. Method:	375.4
Prep. Method:	N/A
Analysis Date:	25-MAR-96
Prep. Date:	25-MAR-96

Sample Duplication

Sample Dup:	603213-1
Rept Limit:	<10
Sample Result:	<10
Dup Result:	<10
Sample RPD:	N/C
Max RPD:	10
Dry Weight%	N/A

Matrix Spike

Sample Spiked:	603213-1
Rept Limit:	<10
Sample Result:	<10
Spiked Result:	26
Spike Added:	20
% Recovery:	130
% Rec Limits:	51-151
Dry Weight%	N/A

ICV

ICV Result:	19
True Result:	20
% Recovery:	95
% Rec Limits:	90-110

LCS

LCS Result:	
True Result:	
% Recovery:	
% Rec Limits:	

----- Common Footnotes WetChem -----

N/A = NOT APPLICABLE.
N/S = NOT SUBMITTED.
N/C = SAMPLE AND DUPLICATE RESULTS ARE AT OR BELOW ATI REPORTING LIMIT; THEREFORE, THE RPD IS "NOT CALCULABLE" AND NO CONTROL LIMITS APPLY.
N/D = NOT DETECTED.
DISS. OR D = DISSOLVED
T & D = TOTAL AND DISSOLVED
R = REACTIVE
T = TOTAL
G = SAMPLE AND/OR DUPLICATE RESULT IS BELOW 5 X ATI REPORTING LIMIT AND THE ABSOLUTE DIFFERENCE BETWEEN THE SAMPLE AND DUPLICATE RESULT IS AT OR BELOW ATI REPORTING LIMIT; THEREFORE, THE RESULTS ARE "IN CONTROL".
Q = THE ANALYTICAL (POST-DIGESTION) SPIKE IS REPORTED DUE TO PERCENT RECOVERY BEING OUTSIDE ACCEPTANCE LIMITS ON THE MATRIX (PRE-DIGESTION) SPIKE.
# = ELEVATED REPORTING LIMIT DUE TO INSUFFICIENT SAMPLE.
+ = ELEVATED REPORTING LIMIT DUE TO DILUTION INTO CALIBRATION RANGE.
* = ELEVATED REPORTING LIMIT DUE TO MATRIX INTERFERENCE. (DILUTION PRIOR TO ANALYSIS)
@ = ADJUSTED REPORTING LIMIT DUE TO SAMPLE MATRIX. (DILUTION PRIOR TO DIGESTION)
P = ANALYTICAL (POST DIGESTION) SPIKE.
I = DUPLICATE INJECTION.
& = AUTOMATED
F = SAMPLE SPIKED > 4 X SPIKE CONCENTRATION.
N/C+ = NOT CALCULABLE
N/C* = NOT CALCULABLE; SAMPLE SPIKED > 4 X SPIKE CONCENTRATION.
H = SAMPLE AND/OR DUPLICATE RESULT IS BELOW 5 X ATI REPORTING LIMIT AND THE ABSOLUTE DIFFERENCE BETWEEN THE RESULTS EXCEEDS THE ATI REPORTING LIMIT; THEREFORE, THE RESULTS ARE "OUT OF CONTROL".
A = SAMPLE AND DUPLICATE RESULTS ARE "OUT OF CONTROL".
Z = THE SAMPLE RESULT FOR THE SPIKE IS BELOW THE REPORTING LIMIT. HOWEVER, THIS RESULT IS REPORTED FOR ACCURATE QC CALCULATIONS.
NH= SAMPLE AND / OR DUPLICATE RESULT IS BELOW 5 X ATI REPORTING LIMIT AND THE ABSOLUTE DIFFERENCE BETWEEN THE RESULTS EXCEEDS THE ATI REPORTING LIMIT; THEREFORE, THE RESULTS ARE "OUT OF CONTROL". SAMPLE IS NON-HOMOGENEOUS.
(*) = DETECTION LIMITS RAISED DUE TO CLP METHOD NOT REQUIRING A CONCENTRATION STEP FOR CN

(CA) = SEE CORRECTIVE ACTIONS FORM.

SW-846, 3rd Edition, September 1986 and Revision 1, July 1992.
EPA 600/4-79-020, Revised March 1983.
STANDARD METHODS, 17TH ED., 1989
NIOSH Manual of Analytical Methods, 3rd Edition.
ANNUAL BOOK OF ASTM STANDARDS, VOLUME 11.01, 1991.

1. COLIFORM. COLIFORM PRECISION IS MEASURED BY THE ABSOLUTE DIFFERENCE BETWEEN THE LOGARITHM OF COLONIES PER 100 MLS OF SAMPLE ON DUPLICATE PLATES.

2. PH. PH PRECISION IS MEASURED BY THE ABSOLUTE DIFFERENCE BETWEEN THE SAMPLE AND DUPLICATE ANALYSIS.

3. FLASHPOINT. FLASHPOINT PRECISION IS MEASURED BY THE ABSOLUTE DIFFERENCE BETWEEN THE SAMPLE AND DUPLICATE ANALYSIS. IF FLASHPOINT IS LESS THAN 25 DEGREES CELSIUS, THE DETECTION LIMIT BECOMES THE INITIAL STARTING TEMPERATURE.

RPD = RELATIVE PERCENT DIFFERENCE (OR DEVIATION).

RPT LIMIT = REPORTING LIMITS BASED ON METHOD DETECTION LIMIT STUDIES.

DPH = DOLLY P. HWANG	SG = SCOTT GRESHAM	RB = REBECCA BROWN
NC = NICOLE CALL	NSB = NANCY S. BUTLER	MM = MARY MOLONEY
CF = CHRISTINE FOSTER	ED = ESTHER DANTIN	AB = ANDY BROTHERTON
AMC = A. MICKEY CROW	RH = RICKY HAGENDORFER	BH = BARRY HICK

ANALYTICAL TECHNOLOGIES, INC. 11 East Olive Road Pensacola, Florida 32514 (904) 474-1001

Quality Control Report

Analysis: SW 846 8260 TABLE SIX

Accession:	603254
Client:	CSX TRANSPORTATION
Project Number:	4365B
Project Name:	CSX GREENVILLE
Project Location:	GREENVILLE, SC
Department:	ORGANIC/MS

ANALYTICAL TECHNOLOGIES, INC. 11 East Olive Road Pensacola, Florida 32514 (904) 474-1001

"QC Report"

Title: Water Blank
Batch: MAW025
Analysis Method: 8260 / SW-846, 3rd Edition, September 1986 and Rev. 1, July 1992.
Extraction Method: N/A

Blank Id: A Date Analyzed: 22-MAR-96 Date Extracted: N/A

Parameters:	Units:	Results:	Reporting Limits:
ACROLEIN	UG/L	ND	100
ACETONE	UG/L	ND	10
ACETONITRILE	UG/L	ND	100
ACRYLONITRILE	UG/L	ND	100
ALLYL CHLORIDE	UG/L	ND	100
BENZENE	UG/L	ND	5
BROMOCHLOROMETHANE	UG/L	ND	5
BROMOBENZENE	UG/L	ND	5
BROMODICHLOROMETHANE	UG/L	ND	5
BROMOFORM	UG/L	ND	5
BROMOMETHANE	UG/L	ND	5
2-BUTANONE	UG/L	ND	5
CARBON DISULFIDE	UG/L	ND	5
CHLOROPRENE	UG/L	ND	5
CARBON TETRACHLORIDE	UG/L	ND	5
CHLOROBENZENE	UG/L	ND	5
CHLOROETHANE	UG/L	ND	5
CHLOROFORM	UG/L	ND	5
CHLOROMETHANE	UG/L	ND	5
2-CHLOROTOLUENE	UG/L	ND	5
4-CHLOROTOLUENE	UG/L	ND	5
CIS 1,2 DICHLOROETHYLENE	UG/L	ND	5
CHLORODIBROMOMETHANE	UG/L	ND	5
1,2 DIBROMOETHANE	UG/L	ND	5
1,2-DIBROMO-3-CHLOROPROPANE	UG/L	ND	5
1,4-DICHLORO-2-BUTENE	UG/L	ND	5
DIBROMOMETHANE	UG/L	ND	5
1,4-DICHLOROBENZENE	UG/L	ND	5
1,3-DICHLOROBENZENE	UG/L	ND	5
1,2-DICHLOROBENZENE	UG/L	ND	5
DICHLORODIFLUOROMETHANE	UG/L	ND	5
1,1-DICHLOROETHANE	UG/L	ND	5
1,2-DICHLOROETHANE	UG/L	ND	5
1,1-DICHLOROETHENE	UG/L	ND	5
1,3 DICHLOROPROPANE	UG/L	ND	5
2,2-DICHLOROPROPANE	UG/L	ND	5
1,2-DICHLOROPROPANE	UG/L	ND	5
CIS-1,3-DICHLOROPROPENE	UG/L	ND	5
TRANS-1,3-DICHLOROPROPENE	UG/L	ND	5
1,1 DICHLOROPROPENE	UG/L	ND	5
ETHYL BENZENE	UG/L	ND	5
METHYL METHACRYLATE	UG/L	ND	5
METHACRYLONITRILE	UG/L	ND	5
4-METHYL-2-PENTANONE	UG/L	ND	5
HEXACHLOROBUTADIENE	UG/L	ND	5
2-HEXANONE	UG/L	ND	5

ANALYTICAL TECHNOLOGIES, INC. 11 East Olive Road Pensacola, Florida 32514 (904) 474-1001

"QC Report"

Title: Water Blank
Batch: MAW025
Analysis Method: 8260 / SW-846, 3rd Edition, September 1986 and Rev. 1, July 1992.
Extraction Method: N/A

Parameters:	Units:	Results:	Reporting Limits:
ISOPROPYL BENZENE	UG/L	ND	5
ISOBUTYL ALCOHOL	UG/L	ND	10
IODOMETHANE	UG/L	ND	5
P-ISOPROPYLTOLUENE	UG/L	ND	5
METHYLENE CHLORIDE	UG/L	ND	5
NAPHTHALENE	UG/L	ND	5
N-BUTYL BENZENE	UG/L	ND	5
N-PROPYL BENZENE	UG/L	ND	5
PROPIONITRILE	UG/L	ND	5
SEC-BUTYL BENZENE	UG/L	ND	5
STYRENE	UG/L	ND	5
TERT-BUTYL BENZENE	UG/L	ND	5
1,1,1,2-TETRACHLOROETHANE	UG/L	ND	5
1,1,2,2-TETRACHLOROETHANE	UG/L	ND	5
TETRACHLOROETHENE	UG/L	ND	5
TOLUENE	UG/L	ND	5
TOLUENE DIISOCYANATE	UG/L	ND	10
TOLUENE DIAMINE	UG/L	ND	10
TRANS 1,2 DICHLOROETHYLENE	UG/L	ND	5
1,1,1-TRICHLOROETHANE	UG/L	ND	5
1,1,2-TRICHLOROETHANE	UG/L	ND	5
1,2,3 TRICHLOROBENZENE	UG/L	ND	5
1,2,4 TRICHLOROBENZENE	UG/L	ND	5
TRICHLOROETHENE	UG/L	ND	5
TRICHLOROFLUOROMETHANE	UG/L	ND	5
1,2,3 TRICHLOROPROPANE	UG/L	ND	5
1,2,4-TRIMETHYLBENZENE	UG/L	ND	5
1,3,5-TRIMETHYLBENZENE	UG/L	ND	5
VINYL ACETATE	UG/L	ND	5
VINYL CHLORIDE	UG/L	ND	5
M,P-XYLENE	UG/L	ND	5
O-XYLENE	UG/L	ND	5
DIBROMOFLUOROMETHANE	%REC/SURR	101	89-116
TOLUENE-D8	%REC/SURR	101	88-110
BROMOFLUOROBENZENE	%REC/SURR	96	86-115
ANALYST	INITIALS	LL	

Comments:

"QC Report"

Title: Water Blank
Batch: MAW025
Analysis Method: 8260 / SW-846, 3rd Edition, September 1986 and Rev. 1, July 1992.
Extraction Method: N/A

Blank Id: B Date Analyzed: 22-MAR-96 Date Extracted: N/A

Parameters:	Units:	Results:	Reporting Limits:
ACROLEIN	UG/L	ND	100
ACETONE	UG/L	ND	10
ACETONITRILE	UG/L	ND	100
ACRYLONITRILE	UG/L	ND	100
ALLYL CHLORIDE	UG/L	ND	100
BENZENE	UG/L	ND	5
BROMOCHLOROMETHANE	UG/L	ND	5
BROMOBENZENE	UG/L	ND	5
BROMODICHLOROMETHANE	UG/L	ND	5
BROMOFORM	UG/L	ND	5
BROMOMETHANE	UG/L	ND	5
2-BUTANONE	UG/L	ND	5
CARBON DISULFIDE	UG/L	ND	5
CHLOROPRENE	UG/L	ND	5
CARBON TETRACHLORIDE	UG/L	ND	5
CHLOROBENZENE	UG/L	ND	5
CHLOROETHANE	UG/L	ND	5
CHLOROFORM	UG/L	ND	5
CHLOROMETHANE	UG/L	ND	5
2-CHLOROTOLUENE	UG/L	ND	5
4-CHLOROTOLUENE	UG/L	ND	5
CIS 1,2 DICHLOROETHYLENE	UG/L	ND	5
CHLORODIBROMOMETHANE	UG/L	ND	5
1,2 DIBROMOETHANE	UG/L	ND	5
1,2-DIBROMO-3-CHLOROPROPANE	UG/L	ND	5
1,4-DICHLORO-2-BUTENE	UG/L	ND	5
DIBROMOMETHANE	UG/L	ND	5
1,4-DICHLOROBENZENE	UG/L	ND	5
1,3-DICHLOROBENZENE	UG/L	ND	5
1,2-DICHLOROBENZENE	UG/L	ND	5
DICHLORODIFLUOROMETHANE	UG/L	ND	5
1,1-DICHLOROETHANE	UG/L	ND	5
1,2-DICHLOROETHANE	UG/L	ND	5
1,1-DICHLOROETHENE	UG/L	ND	5
1,3 DICHLOROPROPANE	UG/L	ND	5
2,2-DICHLOROPROPANE	UG/L	ND	5
1,2-DICHLOROPROPANE	UG/L	ND	5
CIS-1,3-DICHLOROPROPENE	UG/L	ND	5
TRANS-1,3-DICHLOROPROPENE	UG/L	ND	5
1,1 DICHLOROPROPENE	UG/L	ND	5
ETHYL BENZENE	UG/L	ND	5
METHYL METHACRYLATE	UG/L	ND	5
METHACRYLONITRILE	UG/L	ND	5
4-METHYL-2-PENTANONE	UG/L	ND	5
HEXACHLOROBUTADIENE	UG/L	ND	5
2-HEXANONE	UG/L	ND	5

"QC Report"

Title: Water Blank
Batch: MAW025
Analysis Method: 8260 / SW-846, 3rd Edition, September 1986 and Rev. 1, July 1992.
Extraction Method: N/A

Parameters:	Units:	Results:	Reporting Limits:
ISOPROPYL BENZENE	UG/L	ND	5
ISOBUTYL ALCOHOL	UG/L	ND	10
IODOMETHANE	UG/L	ND	5
P-ISOPROPYLTOLUENE	UG/L	ND	5
METHYLENE CHLORIDE	UG/L	ND	5
NAPHTHALENE	UG/L	ND	5
N-BUTYL BENZENE	UG/L	ND	5
N-PROPYL BENZENE	UG/L	ND	5
PROPIONITRILE	UG/L	ND	5
SEC-BUTYL BENZENE	UG/L	ND	5
STYRENE	UG/L	ND	5
TERT-BUTYL BENZENE	UG/L	ND	5
1,1,1,2-TETRACHLOROETHANE	UG/L	ND	5
1,1,2,2-TETRACHLOROETHANE	UG/L	ND	5
TETRACHLOROETHENE	UG/L	ND	5
TOLUENE	UG/L	ND	5
TOLUENE DIISOCYANATE	UG/L	ND	10
TOLUENE DIAMINE	UG/L	ND	10
TRANS 1,2 DICHLOROETHYLENE	UG/L	ND	5
1,1,1-TRICHLOROETHANE	UG/L	ND	5
1,1,2-TRICHLOROETHANE	UG/L	ND	5
1,2,3 TRICHLOROBENZENE	UG/L	ND	5
1,2,4 TRICHLOROBENZENE	UG/L	ND	5
TRICHLOROETHENE	UG/L	ND	5
TRICHLOROFLUOROMETHANE	UG/L	ND	5
1,2,3 TRICHLOROPROPANE	UG/L	ND	5
1,2,4-TRIMETHYLBENZENE	UG/L	ND	5
1,3,5-TRIMETHYLBENZENE	UG/L	ND	5
VINYL ACETATE	UG/L	ND	5
VINYL CHLORIDE	UG/L	ND	5
M,P-XYLENE	UG/L	ND	5
O-XYLENE	UG/L	ND	5
DIBROMOFLUOROMETHANE	%REC/SURR	103	89-116
TOLUENE-D8	%REC/SURR	100	88-110
BROMOFLUOROBENZENE	%REC/SURR	102	86-115
ANALYST	INITIALS	LL	

Comments:

"QC Report"

Title: High Soil Blank
Batch: MAS026
Analysis Method: 8260 / SW-846, 3rd Edition, September 1986 and Rev. 1, July 1992.
Extraction Method: 8260 / SW-846, 3rd Edition, September 1986 and Rev. 1, July 1992.

Blank Id: A Date Analyzed: 25-MAR-96 Date Extracted: 25-MAR-96

Parameters:	Units:	Results:	Reporting Limits:
ACROLEIN	UG/KG	ND	1000
ACETONE	UG/KG	ND	100
ACETONITRILE	UG/KG	ND	1000
ACRYLONITRILE	UG/KG	ND	1000
ALLYL CHLORIDE	UG/KG	ND	1000
BENZENE	UG/KG	ND	50
BROMOCHLOROMETHANE	UG/KG	ND	50
BROMOBENZENE	UG/KG	ND	50
BROMODICHLOROMETHANE	UG/KG	ND	50
BROMOFORM	UG/KG	ND	50
BROMOMETHANE	UG/KG	ND	50
2-BUTANONE	UG/KG	ND	50
CARBON DISULFIDE	UG/KG	ND	50
CHLOROPRENE	UG/KG	ND	50
CARBON TETRACHLORIDE	UG/KG	ND	50
CHLOROBENZENE	UG/KG	ND	50
CHLOROETHANE	UG/KG	ND	50
CHLOROFORM	UG/KG	ND	50
CHLOROMETHANE	UG/KG	ND	50
2-CHLOROTOLUENE	UG/KG	ND	50
4-CHLOROTOLUENE	UG/KG	ND	50
CIS 1,2 DICHLOROETHYLENE	UG/KG	ND	50
CHLORODIBROMOMETHANE	UG/KG	ND	50
1,2 DIBROMOETHANE	UG/KG	ND	50
1,2-DIBROMO-3-CHLOROPROPANE	UG/KG	ND	50
1,4-DICHLORO-2-BUTENE	UG/KG	ND	50
DIBROMOMETHANE	UG/KG	ND	50
1,4-DICHLOROBENZENE	UG/KG	ND	50
1,3-DICHLOROBENZENE	UG/KG	ND	50
1,2-DICHLOROBENZENE	UG/KG	ND	50
DICHLORODIFLUOROMETHANE	UG/KG	ND	50
1,1-DICHLOROETHANE	UG/KG	ND	50
1,2-DICHLOROETHANE	UG/KG	ND	50
1,1-DICHLOROETHENE	UG/KG	ND	50
1,3 DICHLOROPROPANE	UG/KG	ND	50
2,2-DICHLOROPROPANE	UG/KG	ND	50
1,2-DICHLOROPROPANE	UG/KG	ND	50
CIS-1,3-DICHLOROPROPENE	UG/KG	ND	50
TRANS-1,3-DICHLOROPROPENE	UG/KG	ND	50
1,1 DICHLOROPROPENE	UG/KG	ND	50
ETHYL BENZENE	UG/KG	ND	50
METHYL METHACRYLATE	UG/KG	ND	50
METHACRYLONITRILE	UG/KG	ND	50
4-METHYL-2-PENTANONE	UG/KG	ND	50
HEXACHLOROBUTADIENE	UG/KG	ND	50
2-HEXANONE	UG/KG	ND	50

ANALYTICAL TECHNOLOGIES, INC. 11 East Olive Road Pensacola, Florida 32514 (904) 474-1001

"QC Report"

Title: High Soil Blank
Batch: MAS026
Analysis Method: 8260 / SW-846, 3rd Edition, September 1986 and Rev. 1, July 1992.
Extraction Method: 8260 / SW-846, 3rd Edition, September 1986 and Rev. 1, July 1992.

Parameters:	Units:	Results:	Reporting Limits:
ISOPROPYL BENZENE	UG/KG	ND	50
ISOBUTYL ALCOHOL	UG/KG	ND	100
IODOMETHANE	UG/KG	ND	50
P-ISOPROPYLTOLUENE	UG/KG	ND	50
METHYLENE CHLORIDE	UG/KG	ND	50
NAPHTHALENE	UG/KG	ND	50
N-BUTYL BENZENE	UG/KG	ND	50
N-PROPYL BENZENE	UG/KG	ND	50
PROPIONITRILE	UG/KG	ND	50
SEC-BUTYL BENZENE	UG/KG	ND	50
STYRENE	UG/KG	ND	50
TERT-BUTYL BENZENE	UG/KG	ND	50
1,1,1,2-TETRACHLOROETHANE	UG/KG	ND	50
1,1,2,2-TETRACHLOROETHANE	UG/KG	ND	50
TETRACHLOROETHENE	UG/KG	ND	50
TOLUENE	UG/KG	ND	50
TOLUENE DIISOCYANATE	UG/KG	ND	100
TOLUENE DIAMINE	UG/KG	ND	100
TRANS 1,2 DICHLOROETHYLENE	UG/KG	ND	50
1,1,1-TRICHLOROETHANE	UG/KG	ND	50
1,1,2-TRICHLOROETHANE	UG/KG	ND	50
1,2,3 TRICHLOROBENZENE	UG/KG	ND	50
1,2,4 TRICHLOROBENZENE	UG/KG	ND	50
TRICHLOROETHENE	UG/KG	ND	50
TRICHLOROFLUOROMETHANE	UG/KG	ND	50
1,2,3 TRICHLOROPROPANE	UG/KG	ND	50
1,2,4-TRIMETHYLBENZENE	UG/KG	ND	50
1,3,5-TRIMETHYLBENZENE	UG/KG	ND	50
VINYL ACETATE	UG/KG	ND	50
VINYL CHLORIDE	UG/KG	ND	50
M,P-XYLENE	UG/KG	ND	50
O-XYLENE	UG/KG	ND	50
DIBROMOFLUOROMETHANE	%REC/SURR	96	80-120
TOLUENE-D8	%REC/SURR	99	81-117
BROMOFLUOROBENZENE	%REC/SURR	94	74-121
ANALYST	INITIALS	LL	

Comments:

"QC Report"

Title: Low Soil Blank
Batch: MAS025
Analysis Method: 8260 / SW-846, 3rd Edition, September 1986 and Rev. 1, July 1992.
Extraction Method: N/A

Blank Id: B Date Analyzed: 22-MAR-96 Date Extracted: N/A

Parameters:	Units:	Results:	Reporting Limits:
ACROLEIN	UG/KG	ND	100
ACETONE	UG/KG	ND	10
ACETONITRILE	UG/KG	ND	100
ACRYLONITRILE	UG/KG	ND	100
ALLYL CHLORIDE	UG/KG	ND	100
BENZENE	UG/KG	ND	5
BROMOCHLOROMETHANE	UG/KG	ND	5
BROMOBENZENE	UG/KG	ND	5
BROMODICHLOROMETHANE	UG/KG	ND	5
BROMOFORM	UG/KG	ND	5
BROMOMETHANE	UG/KG	ND	5
2-BUTANONE	UG/KG	ND	5
CARBON DISULFIDE	UG/KG	ND	5
CHLOROPRENE	UG/KG	ND	5
CARBON TETRACHLORIDE	UG/KG	ND	5
CHLOROBENZENE	UG/KG	ND	5
CHLOROETHANE	UG/KG	ND	5
CHLOROFORM	UG/KG	ND	5
CHLOROMETHANE	UG/KG	ND	5
2-CHLOROTOLUENE	UG/KG	ND	5
4-CHLOROTOLUENE	UG/KG	ND	5
CIS 1,2 DICHLOROETHYLENE	UG/KG	ND	5
CHLORODIBROMOMETHANE	UG/KG	ND	5
1,2 DIBROMOETHANE	UG/KG	ND	5
1,2-DIBROMO-3-CHLOROPROPANE	UG/KG	ND	5
1,4-DICHLORO-2-BUTENE	UG/KG	ND	5
DIBROMOMETHANE	UG/KG	ND	5
1,4-DICHLOROBENZENE	UG/KG	ND	5
1,3-DICHLOROBENZENE	UG/KG	ND	5
1,2-DICHLOROBENZENE	UG/KG	ND	5
DICHLORODIFLUOROMETHANE	UG/KG	ND	5
1,1-DICHLOROETHANE	UG/KG	ND	5
1,2-DICHLOROETHANE	UG/KG	ND	5
1,1-DICHLOROETHENE	UG/KG	ND	5
1,3 DICHLOROPROPANE	UG/KG	ND	5
2,2-DICHLOROPROPANE	UG/KG	ND	5
1,2-DICHLOROPROPANE	UG/KG	ND	5
CIS-1,3-DICHLOROPROPENE	UG/KG	ND	5
TRANS-1,3-DICHLOROPROPENE	UG/KG	ND	5
1,1 DICHLOROPROPENE	UG/KG	ND	5
ETHYL BENZENE	UG/KG	ND	5
METHYL METHACRYLATE	UG/KG	ND	5
METHACRYLONITRILE	UG/KG	ND	5
4-METHYL-2-PENTANONE	UG/KG	ND	5
HEXACHLOROBUTADIENE	UG/KG	ND	5
2-HEXANONE	UG/KG	ND	5

"QC Report"

Title: Low Soil Blank
Batch: MAS025
Analysis Method: 8260 / SW-846, 3rd Edition, September 1986 and Rev. 1, July 1992.
Extraction Method: N/A

Parameters:	Units:	Results:	Reporting Limits:
ISOPROPYL BENZENE	UG/KG	ND	5
ISOBUTYL ALCOHOL	UG/KG	ND	10
IODOMETHANE	UG/KG	ND	5
P-ISOPROPYLTOLUENE	UG/KG	ND	5
METHYLENE CHLORIDE	UG/KG	ND	5
NAPHTHALENE	UG/KG	ND	5
N-BUTYL BENZENE	UG/KG	ND	5
N-PROPYL BENZENE	UG/KG	ND	5
PROPIONITRILE	UG/KG	ND	5
SEC-BUTYL BENZENE	UG/KG	ND	5
STYRENE	UG/KG	ND	5
TERT-BUTYL BENZENE	UG/KG	ND	5
1,1,1,2-TETRACHLOROETHANE	UG/KG	ND	5
1,1,2,2-TETRACHLOROETHANE	UG/KG	ND	5
TETRACHLOROETHENE	UG/KG	ND	5
TOLUENE	UG/KG	ND	5
TOLUENE DIISOCYANATE	UG/KG	ND	10
TOLUENE DIAMINE	UG/KG	ND	10
TRANS 1,2 DICHLOROETHYLENE	UG/KG	ND	5
1,1,1-TRICHLOROETHANE	UG/KG	ND	5
1,1,2-TRICHLOROETHANE	UG/KG	ND	5
1,2,3 TRICHLOROBENZENE	UG/KG	ND	5
1,2,4 TRICHLOROBENZENE	UG/KG	ND	5
TRICHLOROETHENE	UG/KG	ND	5
TRICHLOROFLUOROMETHANE	UG/KG	ND	5
1,2,3 TRICHLOROPROPANE	UG/KG	ND	5
1,2,4-TRIMETHYLBENZENE	UG/KG	ND	5
1,3,5-TRIMETHYLBENZENE	UG/KG	ND	5
VINYL ACETATE	UG/KG	ND	5
VINYL CHLORIDE	UG/KG	ND	5
M,P-XYLENE	UG/KG	ND	5
O-XYLENE	UG/KG	ND	5
DIBROMOFLUOROMETHANE	%REC/SURR	103	80-120
TOLUENE-D8	%REC/SURR	100	81-117
BROMOFLUOROBENZENE	%REC/SURR	102	74-121
ANALYST	INITIALS	LL	

Comments:

ANALYTICAL TECHNOLOGIES, INC. 11 East Olive Road Pensacola, Florida 32514 (904) 474-1001

"QC Report"

Title: Water Reagent
Batch: MAW025
Analysis Method: 8260 / SW-846, 3rd Edition, September 1986 and Rev. 1, July 1992.
Extraction Method: N/A

RS Date Analyzed: 22-MAR-96
RSD Date Analyzed: 22-MAR-96

RS Date Extracted: N/A
RSD Date Extracted: N/A

Parameters:	Spike Added	Sample Conc	RS Conc	RS %Rec	RSD Conc	RSD %Rec	RPD	RPD Lmts	Rec Lmts
1,1-DICHLOROETHENE	50	<5	56	112	57	114	2	30	72-122
TRICHLOROETHENE	50	<5	51	102	51	102	0	30	81-114
BENZENE	50	<5	57	114	57	114	0	30	87-120
TOLUENE	50	<5	52	104	53	106	2	30	83-120
CHLOROBENZENE	50	<5	52	104	53	106	2	30	87-113
Surrogates:									
DIBROMOFLUOROMETHANE				103		105			89-116
TOLUENE-D8				105		106			88-110
BROMOFLUOROBENZENE				99		99			86-115

Comments:

Notes:
N/S = NOT SUBMITTED N/A = NOT APPLICABLE D = DILUTED OUT
UG/L = PARTS PER BILLION. < = LESS THAN REPORTING LIMIT.
* = VALUES OUTSIDE OF QUALITY CONTROL LIMITS.
SOURCES FOR CONTROL LIMITS ARE INTERNAL LABORATORY QUALITY ASSURANCE PROGRAM AND REFERENCED METHOD.

"QC Report"

Title: Low Soil Reagent
Batch: MAS026
Analysis Method: 8260 / SW-846, 3rd Edition, September 1986 and Rev. 1, July 1992.
Extraction Method: 8260 / SW-846, 3rd Edition, September 1986 and Rev. 1, July 1992.

RS Date Analyzed: 25-MAR-96
RSD Date Analyzed: 25-MAR-96

RS Date Extracted: 25-MAR-96
RSD Date Extracted: 25-MAR-96

Parameters:	Spike Added	Sample Conc	RS Conc	RS %Rec	RSD Conc	RSD %Rec	RPD	RPD Lmts	Rec Lmts
1,1-DICHLOROETHENE	50	<5	44	88	47	94	7	30	1-234
TRICHLOROETHENE	50	<5	45	90	47	94	4	30	71-157
BENZENE	50	<5	50	100	51	102	2	30	37-151
TOLUENE	50	<5	45	90	47	94	4	30	47-150
CHLOROBENZENE	50	<5	45	90	47	94	4	30	37-160
Surrogates:									
DIBROMOFLUOROMETHANE				102		101			80-120
TOLUENE-D8				100		104			81-117
BROMOFLUOROBENZENE				93		94			74-121

Comments:

Notes:
N/S = NOT SUBMITTED N/A = NOT APPLICABLE D = DILUTED OUT
UG/KG = PARTS PER BILLION. < = LESS THAN REPORTING LIMIT.
* = VALUES OUTSIDE OF QUALITY CONTROL LIMITS.
SOURCES FOR CONTROL LIMITS ARE INTERNAL LABORATORY QUALITY ASSURANCE PROGRAM AND REFERENCED METHOD.

"QC Report"

Title: Low Soil Reagent
Batch: MAS025
Analysis Method: 8260 / SW-846, 3rd Edition, September 1986 and Rev. 1, July 1992.
Extraction Method: N/A

RS Date Analyzed: 22-MAR-96
RSD Date Analyzed: 22-MAR-96

RS Date Extracted: N/A
RSD Date Extracted: N/A

Parameters:	Spike Added	Sample Conc	RS Conc	RS %Rec	RSD Conc	RSD %Rec	RPD	RPD Lmts	Rec Lmts
1,1-DICHLOROETHENE	50	<5	56	112	57	114	2	30	1-234
TRICHLOROETHENE	50	<5	51	102	51	102	0	30	71-157
BENZENE	50	<5	57	114	57	114	0	30	37-151
TOLUENE	50	<5	52	104	53	106	2	30	47-150
CHLOROBENZENE	50	<5	52	104	53	106	2	30	37-160
Surrogates:									
DIBROMOFLUOROMETHANE				103		105			80-120
TOLUENE-D8				105		106			81-117
BROMOFLUOROBENZENE				99		99			74-121

Comments:

Notes:
N/S = NOT SUBMITTED N/A = NOT APPLICABLE D = DILUTED OUT
UG/KG = PARTS PER BILLION. < = LESS THAN REPORTING LIMIT.
* = VALUES OUTSIDE OF QUALITY CONTROL LIMITS.
SOURCES FOR CONTROL LIMITS ARE INTERNAL LABORATORY QUALITY ASSURANCE PROGRAM AND REFERENCED METHOD.

"QC Report"

Title: Water Matrix
Batch: MAW025
Analysis Method: 8260 / SW-846, 3rd Edition, September 1986 and Rev. 1, July 1992.
Extraction Method: N/A

Dry Weight %: N/A
Sample Spiked: 603254-2

MS Date Analyzed: 22-MAR-96
MSD Date Analyzed: 22-MAR-96

MS Date Extracted: N/A
MSD Date Extracted: N/A

Parameters:	Spike Added	Sample Conc	MS Conc	MS %Rec	MSD Conc	MSD %Rec	RPD	RPD Lmts	Rec Lmts
1,1-DICHLOROETHENE	50	<5	50	100	52	104	4	14	74-124
TRICHLOROETHENE	50	<5	50	100	51	102	2	24	79-116
BENZENE	50	<5	53	106	55	110	4	16	65-142
TOLUENE	50	<5	50	100	51	102	2	15	89-114
CHLOROBENZENE	50	<5	51	102	51	102	0	15	85-116
Surrogates:									
DIBROMOFLUOROMETHANE				102		104			89-116
TOLUENE-D8				102		105			88-110
BROMOFLUOROBENZENE				98		108			86-115

Comments:

Notes:
N/S = NOT SUBMITTED N/A = NOT APPLICABLE D = DILUTED OUT
UG/L = PARTS PER BILLION. < = LESS THAN REPORTING LIMIT.
* = VALUES OUTSIDE OF QUALITY CONTROL LIMITS.
SOURCES FOR CONTROL LIMITS ARE INTERNAL LABORATORY QUALITY ASSURANCE PROGRAM AND REFERENCED METHOD.

"QC Report"

Title: Low Soil Matrix
Batch: MAS026
Analysis Method: 8260 / SW-846, 3rd Edition, September 1986 and Rev. 1, July 1992.
Extraction Method: 8260 / SW-846, 3rd Edition, September 1986 and Rev. 1, July 1992.

Dry Weight %:
Sample Spiked:

MS Date Analyzed:
MSD Date Analyzed:

MS Date Extracted:
MSD Date Extracted:

Parameters:	Spike Added	Sample Conc	MS Conc	MS %Rec	MSD Conc	MSD %Rec	RPD	RPD Lmts	Rec Lmts
1,1-DICHLOROETHENE								42	1-234
TRICHLOROETHENE								20	71-157
BENZENE								20	37-151
TOLUENE								44	47-150
CHLOROBENZENE								20	37-160
Surrogates:									
DIBROMOFLUOROMETHANE									80-120
TOLUENE-D8									81-117
BROMOFLUOROBENZENE									74-121

Comments:
NO MATRIX SPIKE/MATRIX SPIKE DUPLICATE AVALIABLE DUE TO HIGH DILUTION.

Notes:
N/S = NOT SUBMITTED N/A = NOT APPLICABLE D = DILUTED OUT
UG/KG = PARTS PER BILLION. < = LESS THAN REPORTING LIMIT.
* = VALUES OUTSIDE OF QUALITY CONTROL LIMITS.
SOURCES FOR CONTROL LIMITS ARE INTERNAL LABORATORY QUALITY ASSURANCE PROGRAM AND REFERENCED METHOD.

"QC Report"

Title: Low Soil Matrix
Batch: MAS025
Analysis Method: 8260 / SW-846, 3rd Edition, September 1986 and Rev. 1, July 1992.
Extraction Method: N/A

Dry Weight %: 85
Sample Spiked: 603254-13

MS Date Analyzed: 23-MAR-96
MSD Date Analyzed: 23-MAR-96

MS Date Extracted: N/A
MSD Date Extracted: N/A

Parameters:	Spike Added	Sample Conc	MS Conc	MS %Rec	MSD Conc	MSD %Rec	RPD	RPD Lmts	Rec Lmts
1,1-DICHLOROETHENE	59	<5.9	58	98	59	100	2	42	1-234
TRICHLOROETHENE	59	<5.9	59	100	59	100	0	20	71-157
BENZENE	59	<5.9	64	108	64	108	0	20	37-151
TOLUENE	59	<5.9	59	100	59	100	0	44	47-150
CHLOROBENZENE	59	<5.9	60	102	59	100	2	20	37-160
Surrogates:									
DIBROMOFLUOROMETHANE				100		104			80-120
TOLUENE-D8				100		102			81-117
BROMOFLUOROBENZENE				100		105			74-121

Comments:

Notes:
N/S = NOT SUBMITTED N/A = NOT APPLICABLE D = DILUTED OUT
UG/KG = PARTS PER BILLION. < = LESS THAN REPORTING LIMIT.
* = VALUES OUTSIDE OF QUALITY CONTROL LIMITS.
SOURCES FOR CONTROL LIMITS ARE INTERNAL LABORATORY QUALITY ASSURANCE PROGRAM AND REFERENCED METHOD.

Common notation for Organic reporting

N/S = NOT SUBMITTED
N/A = NOT APPLICABLE
D = DILUTED OUT
UG/L = PARTS PER BILLION.
UG/KG = PARTS PER BILLION.
MG/KG = PARTS PER MILLION.
MG/L = PARTS PER MILLION.
MG/M3 = MILLIGRAMS PER CUBIC METER.
NG = NANOGRAMS.
UG = MICROGRAMS.
PPBV = PARTS PER BILLION/VOLUME.
< = LESS THAN DETECTION LIMIT.
* = VALUES OUTSIDE OF QUALITY CONTROL LIMITS
J = THE REPORTED VALUE IS EITHER LESS THAN THE REPORTING LIMIT BUT GREATER THAN ZERO, OR QUANTITATED AS A TIC; THEREFORE, IT IS ESTIMATED.
JJ = REPORTED VALUE IS ESTIMATED DUE TO MATRIX INTERFERENCE.
ND = NOT DETECTED ABOVE REPORT LIMIT.
RPT LIMIT = REPORTING LIMITS BASED ON METHOD DETECTION LIMIT STUDIES.
RPD = RELATIVE PERCENT DIFFERENCE (OR DEVIATION)

SOURCES FOR CONTROL LIMITS ARE INTERNAL LABORATORY QUALITY ASSURANCE PROGRAM AND REFERENCED METHOD.

ORGANIC SOILS ARE REPORTED ON A DRY WEIGHT BASIS.

DUE TO THE NATURE OF THE SAMPLE MATRIX, MATRIX SPIKE/MATRIX SPIKE DUPLICATE ANALYSIS CANNOT BE PERFORMED FOR AIR ANALYSIS.

CLP SOW 1991, USEPA CONTRACT LABORATORY PROGRAM, STATEMENT OF WORK FOR ORGANICS ANALYSIS, DOCUMENT NUMBER OLM01.8, AUGUST 1991.

LP = LEVERNE PETERSON	RW = RITA WINGO
DWB = DAVID BOWERS	LD = LARRY DILMORE
DB = DENNIS BESON	DC = DAVID CELESTIAL
LL = LANCE LARSON	RB = RAFAEL BARRAZA
JA = JENNIFER ALEXANDER	PL = PAUL LESCHENSKY

ANALYTICAL TECHNOLOGIES, INC. 11 East Olive Road Pensacola, Florida 32514 (904) 474-1001

Quality Control Report

Analysis: BN EXTRACTABLES (8270)

Accession:	603254
Client:	CSX TRANSPORTATION
Project Number:	4365B
Project Name:	CSX GREENVILLE
Project Location:	GREENVILLE, SC
Department:	ORGANIC/MS

ANALYTICAL TECHNOLOGIES, INC. 11 East Olive Road Pensacola, Florida 32514 (904) 474-1001

"QC Report"

Title: Water Blank
Batch: ALW023
Analysis Method: 8270 / SW-846, 3rd Edition, September 1986 and Rev. 1, July 1992.
Extraction Method: 3520 / SW-846, 3rd Edition, September 1986 and Rev. 1, July, 1992.

Blank Id: A Date Analyzed: 25-MAR-96 Date Extracted: 18-MAR-96

Parameters:	Units:	Results:	Reporting Limits:
P-CHLORO-M-CRESOL	UG/L	ND	10
2-CHLOROPHENOL	UG/L	ND	10
O-CRESOL	UG/L	ND	10
M,P CRESOL	UG/L	ND	10
2,4-DICHLOROPHENOL	UG/L	ND	10
2,6-DICHLOROPHENOL	UG/L	ND	10
2,4-DIMETHYLPHENOL	UG/L	ND	10
4,6-DINITRO-O-CRESOL	UG/L	ND	50
2,4-DINITROPHENOL	UG/L	ND	10
2-NITROPHENOL	UG/L	ND	10
4-NITROPHENOL	UG/L	ND	50
PENTACHLOROPHENOL	UG/L	ND	50
PHENOL	UG/L	ND	10
2,3,4,6-TETRACHLOROPHENOL	UG/L	ND	10
2,4,5-TRICHLOROPHENOL	UG/L	ND	50
2,4,6-TRICHLOROPHENOL	UG/L	ND	10
ACENAPHTHENE	UG/L	ND	10
ACENAPHTHYLENE	UG/L	ND	10
ACETOPHENONE	UG/L	ND	10
2-ACETYLAMINOFLUORENE	UG/L	ND	10
4-AMINOBIPHENYL	UG/L	ND	10
ANILINE	UG/L	ND	10
ANTHRACENE	UG/L	ND	10
ARAMITE	UG/L	ND	10
BENZO (A) ANTHRACENE	UG/L	ND	10
BENZO (A) PYRENE	UG/L	ND	10
BENZO (B) FLUORANTHENE	UG/L	ND	10
BENZO (G,H,I) PERYLENE	UG/L	ND	10
BENZO (K) FLUORANTHENE	UG/L	ND	10
BENZYL ALCOHOL	UG/L	ND	10
BIS(2-CHLORO-1-METHYLETHYL)ETHER	UG/L	ND	10
BIS(2-CHLOROETHOXY)METHANE	UG/L	ND	10
BIS(2-CHLOROETHYL)ETHER	UG/L	ND	10
BIS(2-ETHYLHEXYL)PHTHALATE	UG/L	ND	10
4-BROMOPHENYL PHENYL ETHER	UG/L	ND	10
BUTYLBENZYL PHTHALATE	UG/L	ND	10
P-CHLOROANILINE	UG/L	ND	10
CHLOROBENZILATE	UG/L	ND	10
2-CHLORONAPHTHALENE	UG/L	ND	10
4-CHLOROPHENYL PHENYL ETHER	UG/L	ND	10
CHRYSENE	UG/L	ND	10
DIALLATE	UG/L	ND	10
DIBENZO (A,H) ANTHRACENE	UG/L	ND	10
DIBENZOFURAN	UG/L	ND	10
1,2-DICHLOROBENZENE	UG/L	ND	10
1,3-DICHLOROBENZENE	UG/L	ND	10

"QC Report"

Title: Water Blank
Batch: ALW023
Analysis Method: 8270 / SW-846, 3rd Edition, September 1986 and Rev. 1, July 1992.
Extraction Method: 3520 / SW-846, 3rd Edition, September 1986 and Rev. 1, July, 1992.

Parameters:	Units:	Results:	Reporting Limits:
1,4-DICHLOROBENZENE	UG/L	ND	10
3,3'-DICHLOROBENZIDINE	UG/L	ND	50
DIETHYLPHTHALATE	UG/L	ND	10
DIMETHOATE	UG/L	ND	10
P-DIMETHYLAMINOAZOBENZENE	UG/L	ND	10
7,12-DIMETHYLBENZ(A)ANTHRACENE	UG/L	ND	10
3,3'-DIMETHYLBENZIDINE	UG/L	ND	10
A,A-DIMETHYLPHENETHYLAMINE	UG/L	ND	10
DIMETHYLPHTHALATE	UG/L	ND	10
DI-N-BUTYLPHTHALATE	UG/L	ND	10
M-DINITROBENZENE	UG/L	ND	10
2,4-DINITROTOLUENE	UG/L	ND	10
2,6-DINITROTOLUENE	UG/L	ND	10
DI-N-OCTYLPHTHALATE	UG/L	ND	10
DIPHENYLAMINE	UG/L	ND	10
ETHYL METHANESULFONATE	UG/L	ND	10
FAMPHUR	UG/L	ND	10
FLUORANTHENE	UG/L	ND	10
FLUORENE	UG/L	ND	10
HEXACHLOROBENZENE	UG/L	ND	10
HEXACHLOROBUTADIENE	UG/L	ND	10
HEXACHLOROCYCLOPENTADIENE	UG/L	ND	10
HEXACHLOROETHANE	UG/L	ND	10
HEXACHLOROPHENE	UG/L	ND	10
HEXACHLOROPROPENE	UG/L	ND	10
INDENO (1,2,3-CD) PYRENE	UG/L	ND	10
ISODRIN	UG/L	ND	10
ISOPHORONE	UG/L	ND	10
ISOSAFROLE	UG/L	ND	10
KEPONE	UG/L	ND	10
METHAPYRILENE	UG/L	ND	10
3-METHYLCHOLANTHRENE	UG/L	ND	10
METHYL METHANESULFONATE	UG/L	ND	10
1-METHYLNAPHTHALENE	UG/L	ND	10
2-METHYLNAPHTHALENE	UG/L	ND	10
NAPHTHALENE	UG/L	ND	10
1,4-NAPHTHOQUINONE	UG/L	ND	10
1-NAPHTHYLAMINE	UG/L	ND	10
2-NAPHTHYLAMINE	UG/L	ND	10
2-NITROANILINE	UG/L	ND	50
3-NITROANILINE	UG/L	ND	50
4-NITROANILINE	UG/L	ND	50
NITROBENZENE	UG/L	ND	10
5-NITRO-O-TOLUIDINE	UG/L	ND	10
4-NITROQUINOLINE-1-OXIDE	UG/L	ND	10
N-NITROSODIETHYLAMINE	UG/L	ND	10
N-NITROSODIMETHYLAMINE	UG/L	ND	10

ANALYTICAL TECHNOLOGIES, INC. 11 East Olive Road Pensacola, Florida 32514 (904) 474-1001

"QC Report"

Title: Water Blank
Batch: ALW023
Analysis Method: 8270 / SW-846, 3rd Edition, September 1986 and Rev. 1, July 1992.
Extraction Method: 3520 / SW-846, 3rd Edition, September 1986 and Rev. 1, July, 1992.

Parameters:	Units:	Results:	Reporting Limits:
N-NITROSODI-N-BUTYLAMINE	UG/L	ND	10
N-NITROSODIPHENYLAMINE	UG/L	ND	10
N-NITROSOMETHYLETHYLAMINE	UG/L	ND	10
N-NITROSOMORPHOLINE	UG/L	ND	10
N-NITROSOPIPERIDINE	UG/L	ND	10
N-NITROSOPYRROLIDINE	UG/L	ND	10
PARATHION	UG/L	ND	10
PENTACHLOROBENZENE	UG/L	ND	10
PENTACHLOROETHANE	UG/L	ND	10
PENTACHLORONITROBENZENE	UG/L	ND	10
PHENACETIN	UG/L	ND	10
PHENANTHRENE	UG/L	ND	10
2-PICOLINE	UG/L	ND	10
P-PHENYLENEDIAMINE	UG/L	ND	10
PRONAMIDE	UG/L	ND	10
PYRENE	UG/L	ND	10
PYRIDINE	UG/L	ND	10
SAFROLE	UG/L	ND	10
SULFOTEPP	UG/L	ND	10
1,2,4,5-TETRACHLOROBENZENE	UG/L	ND	10
THIONAZIN	UG/L	ND	10
O-TOLUIDINE	UG/L	ND	10
1,2,4 TRICHLOROBENZENE	UG/L	ND	10
SYM-TRINITROBENZENE	UG/L	ND	10
O,O,O-TRIETHYL PHOSPHOROTHIATE	UG/L	ND	10
BENZIDINE	UG/L	ND	10
BIS(2-CHLOROISOPROPYL)ETHER	UG/L	ND	10
2-(SEC BUTYL)4,6-DINITRO-PHENOL(DINOSEB)	UG/L	ND	10
N-NITROSO-DI-N-PROPYLAMINE	UG/L	ND	10
2-FLUOROBIPHENYL	%REC/SURR	87	43-116
TERPHENYL-D14	%REC/SURR	97	33-124
NITROBENZENE-D5	%REC/SURR	82	35-114
2-FLUOROPHENOL	%REC/SURR	80	21-100
PHENOL-D6	%REC/SURR	78	10-100
2,4,6-TRIBROMOPHENOL	%REC/SURR	81	10-123
ANALYST	INITIALS	PL	

Comments:

"QC Report"

Title: Soil Blank
Batch: ALS021
Analysis Method: 8270 / SW-846, 3rd Edition, September 1986 and Rev. 1, July 1992.
Extraction Method: 3550 / SW-846, 3rd Edition, September 1986 and Rev. 1, July 1992.

Blank Id: A Date Analyzed: 03-APR-96 Date Extracted: 19-MAR-96

Parameters:	Units:	Results:	Reporting Limits:
P-CHLORO-M-CRESOL	UG/KG	ND	10
2-CHLOROPHENOL	UG/KG	ND	10
O-CRESOL	UG/KG	ND	10
M,P CRESOL	UG/KG	ND	10
2,4-DICHLOROPHENOL	UG/KG	ND	10
2,6-DICHLOROPHENOL	UG/KG	ND	10
2,4-DIMETHYLPHENOL	UG/KG	ND	10
4,6-DINITRO-O-CRESOL	UG/KG	ND	50
2,4-DINITROPHENOL	UG/KG	ND	10
2-NITROPHENOL	UG/KG	ND	10
4-NITROPHENOL	UG/KG	ND	50
PENTACHLOROPHENOL	UG/KG	ND	50
PHENOL	UG/KG	ND	10
2,3,4,6-TETRACHLOROPHENOL	UG/KG	ND	10
2,4,5-TRICHLOROPHENOL	UG/KG	ND	50
2,4,6-TRICHLOROPHENOL	UG/KG	ND	10
ACENAPHTHENE	UG/KG	ND	10
ACENAPHTHYLENE	UG/KG	ND	10
ACETOPHENONE	UG/KG	ND	10
2-ACETYLAMINOFLUORENE	UG/KG	ND	10
4-AMINOBIPHENYL	UG/KG	ND	10
ANILINE	UG/KG	ND	10
ANTHRACENE	UG/KG	ND	10
ARAMITE	UG/KG	ND	10
BENZO (A) ANTHRACENE	UG/KG	ND	10
BENZO (A) PYRENE	UG/KG	ND	10
BENZO (B) FLUORANTHENE	UG/KG	ND	10
BENZO (G,H,I) PERYLENE	UG/KG	ND	10
BENZO (K) FLUORANTHENE	UG/KG	ND	10
BENZYL ALCOHOL	UG/KG	ND	10
BIS(2-CHLORO-1-METHYLETHYL)ETHER	UG/KG	ND	10
BIS(2-CHLOROETHOXY)METHANE	UG/KG	ND	10
BIS(2-CHLOROETHYL)ETHER	UG/KG	ND	10
BIS(2-ETHYLHEXYL)PHTHALATE	UG/KG	ND	10
4-BROMOPHENYL PHENYL ETHER	UG/KG	ND	10
BUTYLBENZYL PHTHALATE	UG/KG	ND	10
P-CHLOROANILINE	UG/KG	ND	10
CHLOROBENZILATE	UG/KG	ND	10
2-CHLORONAPHTHALENE	UG/KG	ND	10
4-CHLOROPHENYL PHENYL ETHER	UG/KG	ND	10
CHRYSENE	UG/KG	ND	10
DIALLATE	UG/KG	ND	10
DIBENZO (A,H) ANTHRACENE	UG/KG	ND	10
DIBENZOFURAN	UG/KG	ND	10
1,2-DICHLOROBENZENE	UG/KG	ND	10
1,3-DICHLOROBENZENE	UG/KG	ND	10

"QC Report"

Title: Soil Blank
Batch: ALS021
Analysis Method: 8270 / SW-846, 3rd Edition, September 1986 and Rev. 1, July 1992.
Extraction Method: 3550 / SW-846, 3rd Edition, September 1986 and Rev. 1, July 1992.

Parameters:	Units:	Results:	Reporting Limits:
1,4-DICHLOROBENZENE	UG/KG	ND	10
3,3'-DICHLOROBENZIDINE	UG/KG	ND	50
DIETHYLPHTHALATE	UG/KG	ND	10
DIMETHOATE	UG/KG	ND	10
P-DIMETHYLAMINOAZOBENZENE	UG/KG	ND	10
7,12-DIMETHYLBENZ(A)ANTHRACENE	UG/KG	ND	10
3,3'-DIMETHYLBENZIDINE	UG/KG	ND	10
A,A-DIMETHYLPHENETHYLAMINE	UG/KG	ND	10
DIMETHYLPHTHALATE	UG/KG	ND	10
DI-N-BUTYLPHTHALATE	UG/KG	ND	10
M-DINITROBENZENE	UG/KG	ND	10
2,4-DINITROTOLUENE	UG/KG	ND	10
2,6-DINITROTOLUENE	UG/KG	ND	10
DI-N-OCTYLPHTHALATE	UG/KG	ND	10
DIPHENYLAMINE	UG/KG	ND	10
ETHYL METHANESULFONATE	UG/KG	ND	10
FAMPHUR	UG/KG	ND	10
FLUORANTHENE	UG/KG	ND	10
FLUORENE	UG/KG	ND	10
HEXACHLOROBENZENE	UG/KG	ND	10
HEXACHLOROBUTADIENE	UG/KG	ND	10
HEXACHLOROCYCLOPENTADIENE	UG/KG	ND	10
HEXACHLOROETHANE	UG/KG	ND	10
HEXACHLOROPHENE	UG/KG	ND	10
HEXACHLOROPROPENE	UG/KG	ND	10
INDENO (1,2,3-CD) PYRENE	UG/KG	ND	10
ISODRIN	UG/KG	ND	10
ISOPHORONE	UG/KG	ND	10
ISOSAFROLE	UG/KG	ND	10
KEPONE	UG/KG	ND	10
METHAPYRILENE	UG/KG	ND	10
3-METHYLCHOLANTHRENE	UG/KG	ND	10
METHYL METHANESULFONATE	UG/KG	ND	10
1-METHYLNAPHTHALENE	UG/KG	ND	10
2-METHYLNAPHTHALENE	UG/KG	ND	10
NAPHTHALENE	UG/KG	ND	10
1,4-NAPHTHOQUINONE	UG/KG	ND	10
1-NAPHTHYLAMINE	UG/KG	ND	10
2-NAPHTHYLAMINE	UG/KG	ND	10
2-NITROANILINE	UG/KG	ND	50
3-NITROANILINE	UG/KG	ND	50
4-NITROANILINE	UG/KG	ND	50
NITROBENZENE	UG/KG	ND	10
5-NITRO-O-TOLUIDINE	UG/KG	ND	10
4-NITROQUINOLINE-1-OXIDE	UG/KG	ND	10
N-NITROSODIETHYLAMINE	UG/KG	ND	10
N-NITROSODIMETHYLAMINE	UG/KG	ND	10

"QC Report"

Title: Soil Blank
Batch: ALS021
Analysis Method: 8270 / SW-846, 3rd Edition, September 1986 and Rev. 1, July 1992.
Extraction Method: 3550 / SW-846, 3rd Edition, September 1986 and Rev. 1, July 1992.

Parameters:	Units:	Results:	Reporting Limits:
N-NITROSODI-N-BUTYLAMINE	UG/KG	ND	10
N-NITROSODIPHENYLAMINE	UG/KG	ND	10
N-NITROSOMETHYLETHYLAMINE	UG/KG	ND	10
N-NITROSOMORPHOLINE	UG/KG	ND	10
N-NITROSOPIPERIDINE	UG/KG	ND	10
N-NITROSOPYRROLIDINE	UG/KG	ND	10
PARATHION	UG/KG	ND	10
PENTACHLOROBENZENE	UG/KG	ND	10
PENTACHLOROETHANE	UG/KG	ND	10
PENTACHLORONITROBENZENE	UG/KG	ND	10
PHENACETIN	UG/KG	ND	10
PHENANTHRENE	UG/KG	ND	10
2-PICOLINE	UG/KG	ND	10
P-PHENYLENEDIAMINE	UG/KG	ND	10
PRONAMIDE	UG/KG	ND	10
PYRENE	UG/KG	ND	10
PYRIDINE	UG/KG	ND	10
SAFROLE	UG/KG	ND	10
SULFOTEPP	UG/KG	ND	10
1,2,4,5-TETRACHLOROBENZENE	UG/KG	ND	10
THIONAZIN	UG/KG	ND	10
O-TOLUIDINE	UG/KG	ND	10
1,2,4 TRICHLOROBENZENE	UG/KG	ND	10
SYM-TRINITROBENZENE	UG/KG	ND	10
O,O,O-TRIETHYL PHOSPHOROTHIATE	UG/KG	ND	10
BENZIDINE	UG/KG	ND	10
BIS(2-CHLOROISOPROPYL)ETHER	UG/KG	ND	10
2-(SEC BUTYL)4,6-DINITRO-PHENOL(DINOSEB)	UG/KG	ND	10
N-NITROSO-DI-N-PROPYLAMINE	UG/KG	ND	10
2-FLUOROBIPHENYL	%REC/SURR	76	30-115
TERPHENYL-D14	%REC/SURR	90	18-137
NITROBENZENE-D5	%REC/SURR	66	23-120
2-FLUOROPHENOL	%REC/SURR	71	25-121
PHENOL-D6	%REC/SURR	68	24-113
2,4,6-TRIBROMOPHENOL	%REC/SURR	70	19-122
ANALYST	INITIALS	PL	

Comments:

"QC Report"

Title: Water Reagent
Batch: ALW023
Analysis Method: 8270 / SW-846, 3rd Edition, September 1986 and Rev. 1, July 1992.
Extraction Method: 3520 / SW-846, 3rd Edition, September 1986 and Rev. 1, July, 1992.

RS Date Analyzed: 25-MAR-96
RSD Date Analyzed: 25-MAR-96

RS Date Extracted: 18-MAR-96
RSD Date Extracted: 18-MAR-96

Parameters:	Spike Added	Sample Conc	RS Conc	RS %Rec	RSD Conc	RSD %Rec	RPD	RPD Lmts	Rec Lmts
PHENOL	200	<10	124	62	130	65	5	32	5-112
2-CHLOROPHENOL	200	<10	134	67	144	72	7	27	40-120
1,4-DICHLOROBENZENE	100	<10	68	68	74	74	8	29	32-119
N-NITRO-DI-N-PROPYLAMINE	100	<10	58	58	74	74	24	30	26-128
1,2,4 TRICHLOROBENZENE	100	<10	68	68	76	76	11	28	44-142
4-CHLORO-3-METHYLPHENOL	200	<10	136	68	146	73	7	28	30-128
ACENAPHTHENE	100	<10	70	70	88	88	23	26	47-145
4-NITROPHENOL	200	<50	140	70	160	80	13	50	1-132
2,4-DINITROTOLUENE	100	<10	68	68	84	84	21	29	39-138
PENTACHLOROPHENOL	200	<50	138	69	146	73	6	24	15-157
PYRENE	100	<10	64	64	74	74	14	25	52-115
Surrogates:									
NITROBENZENE-D5				71		83			35-114
2-FLUOROBIPHENYL				73		88			43-116
TERPHENYL-D14				79		93			33-124
PHENOL-D6				72		77			10-100
2-FLUOROPHENOL				71		77			21-100
2,4,6-TRIBROMOPHENOL				73		82			10-123

Comments:

Notes:
N/S = NOT SUBMITTED N/A = NOT APPLICABLE D = DILUTED OUT
UG/L = PARTS PER BILLION. < = LESS THAN REPORTING LIMIT.
* = VALUES OUTSIDE OF QUALITY CONTROL LIMITS.
SOURCES FOR CONTROL LIMITS ARE INTERNAL LABORATORY QUALITY ASSURANCE PROGRAM AND REFERENCED METHOD.

"QC Report"

Title: Soil Reagent
Batch: ALS021
Analysis Method: 8270 / SW-846, 3rd Edition, September 1986 and Rev. 1, July 1992.
Extraction Method: 3550 / SW-846, 3rd Edition, September 1986 and Rev. 1, July 1992.

RS Date Analyzed: 03-APR-96
RSD Date Analyzed: 03-APR-96
RS Date Extracted: 19-MAR-96
RSD Date Extracted: 19-MAR-96

Parameters:	Spike Added	Sample Conc	RS Conc	RS %Rec	RSD Conc	RSD %Rec	RPD	RPD Lmts	Rec Lmts
PHENOL	3333	<330	2200	66	2500	75	13	27	5-112
2-CHLOROPHENOL	3333	<330	2200	66	2533	76	14	32	38-123
1,4-DICHLOROBENZENE	1667	<330	1200	72	1400	84	15	25	50-111
N-NITRO-DI-N-PROPYLAMINE	1667	<330	1100	66	1200	72	9	25	39-121
1,2,4 TRICHLOROBENZENE	1667	<330	1200	72	1367	82	13	24	49-115
4-CHLORO-3-METHYLPHENOL	3333	<330	2400	72	2633	79	9	26	37-128
ACENAPHTHENE	1667	<330	1333	80	1367	82	2	19	53-115
4-NITROPHENOL	3333	<1700	2300	69	2400	72	4	50	32-126
2,4-DINITROTOLUENE	1667	<330	1167	70	1233	74	6	21	56-118
PENTACHLOROPHENOL	3333	<1700	2700	81	2800	84	4	20	31-146
PYRENE	1667	<330	1067	64	1133	68	6	23	52-115
Surrogates:									
NITROBENZENE-D5				75		84			23-120
2-FLUOROBIPHENYL				84		89			30-115
TERPHENYL-D14				92		94			18-137
PHENOL-D6				76		86			24-113
2-FLUOROPHENOL				77		86			25-121
2,4,6-TRIBROMOPHENOL				79		81			19-122

Comments:

Notes:
N/S = NOT SUBMITTED N/A = NOT APPLICABLE D = DILUTED OUT
UG/KG = PARTS PER BILLION. < = LESS THAN REPORTING LIMIT.
* = VALUES OUTSIDE OF QUALITY CONTROL LIMITS.
SOURCES FOR CONTROL LIMITS ARE INTERNAL LABORATORY QUALITY ASSURANCE PROGRAM AND REFERENCED METHOD.

"QC Report"

Title: Water Matrix
Batch: ALW023
Analysis Method: 8270 / SW-846, 3rd Edition, September 1986 and Rev. 1, July 1992.
Extraction Method: 3520 / SW-846, 3rd Edition, September 1986 and Rev. 1, July, 1992.

Dry Weight %: N/A
Sample Spiked: 603270-1

MS Date Analyzed: 25-MAR-96
MSD Date Analyzed: 25-MAR-96

MS Date Extracted: 18-MAR-96
MSD Date Extracted: 18-MAR-96

Parameters:	Spike Added	Sample Conc	MS Conc	MS %Rec	MSD Conc	MSD %Rec	RPD	RPD Lmts	Rec Lmts
PHENOL	400	<10	212	53	228	57	7	38	5-112
2-CHLOROPHENOL	400	<10	244	61	260	65	6	25	38-120
1,4-DICHLOROBENZENE	200	<10	152	76	160	80	5	27	39-112
N-NITRO-DI-N-PROPYLAMINE	200	<10	152	76	156	78	3	30	32-125
1,2,4 TRICHLOROBENZENE	200	<10	152	76	160	80	5	30	44-118
4-CHLORO-3-METHYLPHENOL	400	<10	256	64	260	65	2	23	42-131
ACENAPHTHENE	200	<10	172	86	180	90	5	21	47-131
4-NITROPHENOL	400	<50	292	73	312	78	7	36	1-116
2,4-DINITROTOLUENE	200	<10	164	82	176	88	7	22	39-138
PENTACHLOROPHENOL	400	<50	160	40	204	51	24	36	14-164
PYRENE	200	<10	144	72	152	76	5	21	52-115
Surrogates:									
NITROBENZENE-D5				90		87			35-114
2-FLUOROBIPHENYL				93		91			43-116
TERPHENYL-D14				98		99			33-124
PHENOL-D6				65		62			10-100
2-FLUOROPHENOL				63		58			21-100
2,4,6-TRIBROMOPHENOL				67		62			10-123

Comments:

Notes:
N/S = NOT SUBMITTED N/A = NOT APPLICABLE D = DILUTED OUT
UG/L = PARTS PER BILLION. < = LESS THAN REPORTING LIMIT.
* = VALUES OUTSIDE OF QUALITY CONTROL LIMITS.
SOURCES FOR CONTROL LIMITS ARE INTERNAL LABORATORY QUALITY ASSURANCE PROGRAM AND REFERENCED METHOD.

ANALYTICAL TECHNOLOGIES, INC. 11 East Olive Road Pensacola, Florida 32514 (904) 474-1001

"QC Report"

Title: Soil Matrix
Batch: ALS021
Analysis Method: 8270 / SW-846, 3rd Edition, September 1986 and Rev. 1, July 1992.
Extraction Method: 3550 / SW-846, 3rd Edition, September 1986 and Rev. 1, July 1992.

Dry Weight %: 74
Sample Spiked: 603254-11

MS Date Analyzed: 10-APR-96
MSD Date Analyzed: 10-APR-96

MS Date Extracted: 19-MAR-96
MSD Date Extracted: 19-MAR-96

Parameters:	Spike Added	Sample Conc	MS Conc	MS %Rec	MSD Conc	MSD %Rec	RPD	RPD Lmts	Rec Lmts
PHENOL	44	<330	29	65	25	56	15	22	40-103
2-CHLOROPHENOL	44	<330	31	69	28	62	11	27	39-104
1,4-DICHLOROBENZENE	22	<330	16	72	16	70	3	27	43-109
N-NITRO-DI-N-PROPYLAMINE	22	<330	12	54	9	42	25	27	29-117
1,2,4 TRICHLOROBENZENE	22	<330	15	70	15	66	6	21	49-126
4-CHLORO-3-METHYLPHENOL	44	<330	26	58	20	44	27	28	32-117
ACENAPHTHENE	22	<330	16	72	14	64	12	20	47-126
4-NITROPHENOL	44	<1700	20	45	14	32	34	42	1-124
2,4-DINITROTOLUENE	22	<330	15	66	13	56	16	23	43-110
PENTACHLOROPHENOL	44	<1700	27	60	23	52	14	33	14-144
PYRENE	22	<330	15	70	13	58	19	31	52-115
Surrogates:									
NITROBENZENE-D5				62		70			23-120
2-FLUOROBIPHENYL				64		74			30-115
TERPHENYL-D14				70		79			18-137
PHENOL-D6				57		67			24-113
2-FLUOROPHENOL				60		71			25-121
2,4,6-TRIBROMOPHENOL				53		64			19-122

Comments:

Notes:
N/S = NOT SUBMITTED N/A = NOT APPLICABLE D = DILUTED OUT
UG/KG = PARTS PER BILLION. < = LESS THAN REPORTING LIMIT.
* = VALUES OUTSIDE OF QUALITY CONTROL LIMITS.
SOURCES FOR CONTROL LIMITS ARE INTERNAL LABORATORY QUALITY ASSURANCE PROGRAM AND REFERENCED METHOD.

Common notation for Organic reporting

N/S = NOT SUBMITTED
N/A = NOT APPLICABLE
D = DILUTED OUT
UG/L = PARTS PER BILLION.
UG/KG = PARTS PER BILLION.
MG/KG = PARTS PER MILLION.
MG/L = PARTS PER MILLION.
MG/M3 = MILLIGRAMS PER CUBIC METER.
NG = NANOGRAMS.
UG = MICROGRAMS.
PPBV = PARTS PER BILLION/VOLUME.
< = LESS THAN DETECTION LIMIT.
* = VALUES OUTSIDE OF QUALITY CONTROL LIMITS
J = THE REPORTED VALUE IS EITHER LESS THAN THE REPORTING LIMIT BUT GREATER THAN ZERO, OR QUANTITATED AS A TIC; THEREFORE, IT IS ESTIMATED.
JJ = REPORTED VALUE IS ESTIMATED DUE TO MATRIX INTERFERENCE.
ND = NOT DETECTED ABOVE REPORT LIMIT.
RPT LIMIT = REPORTING LIMITS BASED ON METHOD DETECTION LIMIT STUDIES.
RPD = RELATIVE PERCENT DIFFERENCE (OR DEVIATION)

SOURCES FOR CONTROL LIMITS ARE INTERNAL LABORATORY QUALITY ASSURANCE PROGRAM AND REFERENCED METHOD.

ORGANIC SOILS ARE REPORTED ON A DRY WEIGHT BASIS.

DUE TO THE NATURE OF THE SAMPLE MATRIX, MATRIX SPIKE/MATRIX SPIKE DUPLICATE ANALYSIS CANNOT BE PERFORMED FOR AIR ANALYSIS.

CLP SOW 1991, USEPA CONTRACT LABORATORY PROGRAM, STATEMENT OF WORK FOR ORGANICS ANALYSIS, DOCUMENT NUMBER OLM01.8, AUGUST 1991.

LP = LEVERNE PETERSON	RW = RITA WINGO
DWB = DAVID BOWERS	LD = LARRY DILMORE
DB = DENNIS BESON	DC = DAVID CELESTIAL
LL = LANCE LARSON	RB = RAFAEL BARRAZA
JA = JENNIFER ALEXANDER	PL = PAUL LESCHENSKY

AMERICAN ENVIRONMENTAL NETWORK 11 East Olive Road Pensacola, Florida 32514 (904) 474-1001

Quality Control Report

Analysis: BN EXTRACTABLES (8270)

Accession:	604535
Client:	CSX TRANSPORTATION
Project Number:	4365B
Project Name:	VAUGHN LANDFILL
Project Location:	CSXT9415585
Department:	ORGANIC/MS

"QC Report"

Title: Soil Blank
Batch: ALS028
Analysis Method: 8270 / SW-846, 3rd Edition, September 1986 and Rev. 1, July 1992.
Extraction Method: 3550 / SW-846, 3rd Edition, September 1986 and Rev. 1, July 1992.

Blank Id: A Date Analyzed: 03-MAY-96 Date Extracted: 01-MAY-96

Parameters:	Units:	Results:	Reporting Limits:
P-CHLORO-M-CRESOL	UG/KG	ND	10
2-CHLOROPHENOL	UG/KG	ND	10
O-CRESOL	UG/KG	ND	10
M,P CRESOL	UG/KG	ND	10
2,4-DICHLOROPHENOL	UG/KG	ND	10
2,6-DICHLOROPHENOL	UG/KG	ND	10
2,4-DIMETHYLPHENOL	UG/KG	ND	10
4,6-DINITRO-O-CRESOL	UG/KG	ND	50
2,4-DINITROPHENOL	UG/KG	ND	10
2-NITROPHENOL	UG/KG	ND	10
4-NITROPHENOL	UG/KG	ND	50
PENTACHLOROPHENOL	UG/KG	ND	50
PHENOL	UG/KG	ND	10
2,3,4,6-TETRACHLOROPHENOL	UG/KG	ND	10
2,4,5-TRICHLOROPHENOL	UG/KG	ND	50
2,4,6-TRICHLOROPHENOL	UG/KG	ND	10
ACENAPHTHENE	UG/KG	ND	10
ACENAPHTHYLENE	UG/KG	ND	10
ACETOPHENONE	UG/KG	ND	10
2-ACETYLAMINOFLUORENE	UG/KG	ND	10
4-AMINOBIPHENYL	UG/KG	ND	10
ANILINE	UG/KG	ND	10
ANTHRACENE	UG/KG	ND	10
ARAMITE	UG/KG	ND	10
BENZO (A) ANTHRACENE	UG/KG	ND	10
BENZO (A) PYRENE	UG/KG	ND	10
BENZO (B) FLUORANTHENE	UG/KG	ND	10
BENZO (G,H,I) PERYLENE	UG/KG	ND	10
BENZO (K) FLUORANTHENE	UG/KG	ND	10
BENZYL ALCOHOL	UG/KG	ND	10
BIS(2-CHLORO-1-METHYLETHYL)ETHER	UG/KG	ND	10
BIS(2-CHLOROETHOXY)METHANE	UG/KG	ND	10
BIS(2-CHLOROETHYL)ETHER	UG/KG	ND	10
BIS(2-ETHYLHEXYL)PHTHALATE	UG/KG	ND	10
4-BROMOPHENYL PHENYL ETHER	UG/KG	ND	10
BUTYLBENZYL PHTHALATE	UG/KG	ND	10
P-CHLOROANILINE	UG/KG	ND	10
CHLOROBENZILATE	UG/KG	ND	10
2-CHLORONAPHTHALENE	UG/KG	ND	10
4-CHLOROPHENYL PHENYL ETHER	UG/KG	ND	10
CHRYSENE	UG/KG	ND	10
DIALLATE	UG/KG	ND	10
DIBENZO (A,H) ANTHRACENE	UG/KG	ND	10
DIBENZOFURAN	UG/KG	ND	10
1,2-DICHLOROBENZENE	UG/KG	ND	10
1,3-DICHLOROBENZENE	UG/KG	ND	10

"QC Report"

Title: Soil Blank
Batch: ALS028
Analysis Method: 8270 / SW-846, 3rd Edition, September 1986 and Rev. 1, July 1992.
Extraction Method: 3550 / SW-846, 3rd Edition, September 1986 and Rev. 1, July 1992.

Parameters:	Units:	Results:	Reporting Limits:
1,4-DICHLOROBENZENE	UG/KG	ND	10
3,3'-DICHLOROBENZIDINE	UG/KG	ND	50
DIETHYLPHTHALATE	UG/KG	ND	10
DIMETHOATE	UG/KG	ND	10
P-DIMETHYLAMINOAZOBENZENE	UG/KG	ND	10
7,12-DIMETHYLBENZ(A)ANTHRACENE	UG/KG	ND	10
3,3'-DIMETHYLBENZIDINE	UG/KG	ND	10
A,A-DIMETHYLPHENETHYLAMINE	UG/KG	ND	10
DIMETHYLPHTHALATE	UG/KG	ND	10
DI-N-BUTYLPHTHALATE	UG/KG	ND	10
M-DINITROBENZENE	UG/KG	ND	10
2,4-DINITROTOLUENE	UG/KG	ND	10
2,6-DINITROTOLUENE	UG/KG	ND	10
DI-N-OCTYLPHTHALATE	UG/KG	ND	10
DIPHENYLAMINE	UG/KG	ND	10
ETHYL METHANESULFONATE	UG/KG	ND	10
FAMPHUR	UG/KG	ND	10
FLUORANTHENE	UG/KG	ND	10
FLUORENE	UG/KG	ND	10
HEXACHLOROBENZENE	UG/KG	ND	10
HEXACHLOROBUTADIENE	UG/KG	ND	10
HEXACHLOROCYCLOPENTADIENE	UG/KG	ND	10
HEXACHLOROETHANE	UG/KG	ND	10
HEXACHLOROPHENE	UG/KG	ND	10
HEXACHLOROPROPENE	UG/KG	ND	10
INDENO (1,2,3-CD) PYRENE	UG/KG	ND	10
ISODRIN	UG/KG	ND	10
ISOPHORONE	UG/KG	ND	10
ISOSAFROLE	UG/KG	ND	10
KEPONE	UG/KG	ND	10
METHAPYRILENE	UG/KG	ND	10
3-METHYLCHOLANTHRENE	UG/KG	ND	10
METHYL METHANESULFONATE	UG/KG	ND	10
1-METHYLNAPHTHALENE	UG/KG	ND	10
2-METHYLNAPHTHALENE	UG/KG	ND	10
NAPHTHALENE	UG/KG	ND	10
1,4-NAPHTHOQUINONE	UG/KG	ND	10
1-NAPHTHYLAMINE	UG/KG	ND	10
2-NAPHTHYLAMINE	UG/KG	ND	10
2-NITROANILINE	UG/KG	ND	50
3-NITROANILINE	UG/KG	ND	50
4-NITROANILINE	UG/KG	ND	50
NITROBENZENE	UG/KG	ND	10
5-NITRO-O-TOLUIDINE	UG/KG	ND	10
4-NITROQUINOLINE-1-OXIDE	UG/KG	ND	10
N-NITROSODIETHYLAMINE	UG/KG	ND	10
N-NITROSODIMETHYLAMINE	UG/KG	ND	10

"QC Report"

Title: Soil Blank
Batch: ALS028
Analysis Method: 8270 / SW-846, 3rd Edition, September 1986 and Rev. 1, July 1992.
Extraction Method: 3550 / SW-846, 3rd Edition, September 1986 and Rev. 1, July 1992.

Parameters:	Units:	Results:	Reporting Limits:
N-NITROSODI-N-BUTYLAMINE	UG/KG	ND	10
N-NITROSODIPHENYLAMINE	UG/KG	ND	10
N-NITROSOMETHYLETHYLAMINE	UG/KG	ND	10
N-NITROSOMORPHOLINE	UG/KG	ND	10
N-NITROSOPIPERIDINE	UG/KG	ND	10
N-NITROSOPYRROLIDINE	UG/KG	ND	10
PARATHION	UG/KG	ND	10
PENTACHLOROBENZENE	UG/KG	ND	10
PENTACHLOROETHANE	UG/KG	ND	10
PENTACHLORONITROBENZENE	UG/KG	ND	10
PHENACETIN	UG/KG	ND	10
PHENANTHRENE	UG/KG	ND	10
2-PICOLINE	UG/KG	ND	10
P-PHENYLENEDIAMINE	UG/KG	ND	10
PRONAMIDE	UG/KG	ND	10
PYRENE	UG/KG	ND	10
PYRIDINE	UG/KG	ND	10
SAFROLE	UG/KG	ND	10
SULFOTEPP	UG/KG	ND	10
1,2,4,5-TETRACHLOROBENZENE	UG/KG	ND	10
THIONAZIN	UG/KG	ND	10
O-TOLUIDINE	UG/KG	ND	10
1,2,4 TRICHLOROBENZENE	UG/KG	ND	10
SYM-TRINITROBENZENE	UG/KG	ND	10
O,O,O-TRIETHYL PHOSPHOROTHIATE	UG/KG	ND	10
BENZIDINE	UG/KG	ND	10
BIS(2-CHLOROISOPROPYL)ETHER	UG/KG	ND	10
2-(SEC BUTYL)4,6-DINITRO-PHENOL(DINOSEB)	UG/KG	ND	10
N-NITROSO-DI-N-PROPYLAMINE	UG/KG	ND	10
2-FLUOROBIPHENYL	%REC/SURR	65	30-115
TERPHENYL-D14	%REC/SURR	93	18-137
NITROBENZENE-D5	%REC/SURR	57	23-120
2-FLUOROPHENOL	%REC/SURR	69	25-121
PHENOL-D6	%REC/SURR	52	24-113
2,4,6-TRIBROMOPHENOL	%REC/SURR	71	19-122
ANALYST	INITIALS	RW	

Comments:

"QC Report"

Title: Soil Reagent
Batch: ALS028
Analysis Method: 8270 / SW-846, 3rd Edition, September 1986 and Rev. 1, July 1992.
Extraction Method: 3550 / SW-846, 3rd Edition, September 1986 and Rev. 1, July 1992.

RS Date Analyzed: 07-May-96
RSD Date Analyzed: 07-May-96

RS Date Extracted: 01-May-96
RSD Date Extracted: 01-May-96

Parameters:	Spike Added	Sample Conc	RS Conc	RS %Rec	RSD Conc	RSD %Rec	RPD	RPD Lmts	Rec Lmts
PHENOL	3333	<330	2567	77	2200	66	15	27	5-112
2-CHLOROPHENOL	3333	<330	2600	78	2167	65	18	32	38-123
1,4-DICHLOROBENZENE	1667	<330	1333	80	1100	66	19	25	50-111
N-NITRO-DI-N-PROPYLAMINE	1667	<330	1267	76	1133	68	11	25	39-121
1,2,4 TRICHLOROBENZENE	1667	<330	1300	78	1133	68	14	24	49-115
4-CHLORO-3-METHYLPHENOL	3333	<330	2500	75	2367	71	5	26	37-128
ACENAPHTHENE	1667	<330	1367	82	1233	74	10	19	53-115
4-NITROPHENOL	3333	<1700	2933	88	3233	97	10	50	32-126
2,4-DINITROTOLUENE	1667	<330	1467	88	1500	90	2	21	56-118
PENTACHLOROPHENOL	3333	<1700	2300	69	2367	71	3	20	31-146
PYRENE	1667	<330	1200	72	1267	76	5	23	52-115
Surrogates:									
NITROBENZENE-D5				91		79			23-120
2-FLUOROBIPHENYL				100		87			30-115
TERPHENYL-D14				113		108			18-137
PHENOL-D6				76		60			24-113
2-FLUOROPHENOL				77		59			25-121
2,4,6-TRIBROMOPHENOL				79		74			19-122

Comments:
DUE TO THE NATURE OF THE SAMPLE MATRIX, MATRIX SPIKE/MATRIX SPIKE DUPLICATE CANNOT BE ANALYZED.

Notes:
N/S = NOT SUBMITTED N/A = NOT APPLICABLE D = DILUTED OUT
UG/KG = PARTS PER BILLION. < = LESS THAN REPORTING LIMIT.
* = VALUES OUTSIDE OF QUALITY CONTROL LIMITS.
SOURCES FOR CONTROL LIMITS ARE INTERNAL LABORATORY QUALITY ASSURANCE PROGRAM AND REFERENCED METHOD.

Common notation for Organic reporting

N/S = NOT SUBMITTED
N/A = NOT APPLICABLE
D = DILUTED OUT
UG/L = PARTS PER BILLION.
UG/KG = PARTS PER BILLION.
MG/KG = PARTS PER MILLION.
MG/L = PARTS PER MILLION.
MG/M3 = MILLIGRAMS PER CUBIC METER.
NG = NANOGRAMS.
UG = MICROGRAMS.
PPBV = PARTS PER BILLION/VOLUME.
< = LESS THAN DETECTION LIMIT.
* = VALUES OUTSIDE OF QUALITY CONTROL LIMITS
J = THE REPORTED VALUE IS EITHER LESS THAN THE REPORTING LIMIT BUT GREATER THAN ZERO, OR QUANTITATED AS A TIC; THEREFORE, IT IS ESTIMATED.
JJ = REPORTED VALUE IS ESTIMATED DUE TO MATRIX INTERFERENCE.
ND = NOT DETECTED ABOVE REPORT LIMIT.
RPT LIMIT = REPORTING LIMITS BASED ON METHOD DETECTION LIMIT STUDIES.
RPD = RELATIVE PERCENT DIFFERENCE (OR DEVIATION)

SOURCES FOR CONTROL LIMITS ARE INTERNAL LABORATORY QUALITY ASSURANCE PROGRAM AND REFERENCED METHOD.

ORGANIC SOILS ARE REPORTED ON A DRY WEIGHT BASIS.

DUE TO THE NATURE OF THE SAMPLE MATRIX, MATRIX SPIKE/MATRIX SPIKE DUPLICATE ANALYSIS CANNOT BE PERFORMED FOR AIR ANALYSIS.

CLP SOW 1991, USEPA CONTRACT LABORATORY PROGRAM, STATEMENT OF WORK FOR ORGANICS ANALYSIS, DOCUMENT NUMBER OLM01.8, AUGUST 1991.

LP = LEVERNE PETERSON	RW = RITA WINGO
DWB = DAVID BOWERS	LD = LARRY DILMORE
DB = DENNIS BESON	DC = DAVID CELESTIAL
LL = LANCE LARSEN	RB = RAFAEL BARRAZA
JA = JENNIFER ALEXANDER	PL = PAUL LESCHENSKY

AMERICAN ENVIRONMENTAL NETWORK 11 East Olive Road Pensacola, Florida 32514 (904) 474-1001

Quality Control Report

Analysis: SW 846 8260 TABLE SIX

Accession:	604535
Client:	CSX TRANSPORTATION
Project Number:	4365B
Project Name:	VAUGHN LANDFILL
Project Location:	CSXT9415585
Department:	ORGANIC/MS

"QC Report"

Title: Low Soil Blank
Batch: MAS052
Analysis Method: 8260 / SW-846, 3rd Edition, September 1986 and Rev. 1, July 1992.
Extraction Method: N/A

Blank Id: A Date Analyzed: 30-APR-96 Date Extracted: N/A

Parameters:	Units:	Results:	Reporting Limits:
ACROLEIN	UG/KG	ND	100
ACETONE	UG/KG	ND	10
ACETONITRILE	UG/KG	ND	100
ACRYLONITRILE	UG/KG	ND	100
ALLYL CHLORIDE	UG/KG	ND	100
BENZENE	UG/KG	ND	5
BROMOCHLOROMETHANE	UG/KG	ND	5
BROMOBENZENE	UG/KG	ND	5
BROMODICHLOROMETHANE	UG/KG	ND	5
BROMOFORM	UG/KG	ND	5
BROMOMETHANE	UG/KG	ND	5
2-BUTANONE	UG/KG	ND	5
CARBON DISULFIDE	UG/KG	ND	5
CHLOROPRENE	UG/KG	ND	5
CARBON TETRACHLORIDE	UG/KG	ND	5
CHLOROBENZENE	UG/KG	ND	5
CHLOROETHANE	UG/KG	ND	5
CHLOROFORM	UG/KG	ND	5
CHLOROMETHANE	UG/KG	ND	5
2-CHLOROTOLUENE	UG/KG	ND	5
4-CHLOROTOLUENE	UG/KG	ND	5
CIS 1,2 DICHLOROETHYLENE	UG/KG	ND	5
CHLORODIBROMOMETHANE	UG/KG	ND	5
1,2 DIBROMOETHANE	UG/KG	ND	5
1,2-DIBROMO-3-CHLOROPROPANE	UG/KG	ND	5
1,4-DICHLORO-2-BUTENE	UG/KG	ND	5
DIBROMOMETHANE	UG/KG	ND	5
1,4-DICHLOROBENZENE	UG/KG	ND	5
1,3-DICHLOROBENZENE	UG/KG	ND	5
1,2-DICHLOROBENZENE	UG/KG	ND	5
DICHLORODIFLUOROMETHANE	UG/KG	ND	5
1,1-DICHLOROETHANE	UG/KG	ND	5
1,2-DICHLOROETHANE	UG/KG	ND	5
1,1-DICHLOROETHENE	UG/KG	ND	5
1,3 DICHLOROPROPANE	UG/KG	ND	5
2,2-DICHLOROPROPANE	UG/KG	ND	5
1,2-DICHLOROPROPANE	UG/KG	ND	5
CIS-1,3-DICHLOROPROPENE	UG/KG	ND	5
TRANS-1,3-DICHLOROPROPENE	UG/KG	ND	5
1,1 DICHLOROPROPENE	UG/KG	ND	5
ETHYL BENZENE	UG/KG	ND	5
METHYL METHACRYLATE	UG/KG	ND	5
METHACRYLONITRILE	UG/KG	ND	5
4-METHYL-2-PENTANONE	UG/KG	ND	5
HEXACHLOROBUTADIENE	UG/KG	ND	5
2-HEXANONE	UG/KG	ND	5

"QC Report"

Title: Low Soil Blank
Batch: MAS052
Analysis Method: 8260 / SW-846, 3rd Edition, September 1986 and Rev. 1, July 1992.
Extraction Method: N/A

Parameters:	Units:	Results:	Reporting Limits:
ISOPROPYL BENZENE	UG/KG	ND	5
ISOBUTYL ALCOHOL	UG/KG	ND	10
IODOMETHANE	UG/KG	ND	5
P-ISOPROPYLTOLUENE	UG/KG	ND	5
METHYLENE CHLORIDE	UG/KG	ND	5
NAPHTHALENE	UG/KG	ND	5
N-BUTYL BENZENE	UG/KG	ND	5
N-PROPYL BENZENE	UG/KG	ND	5
PROPIONITRILE	UG/KG	ND	5
SEC-BUTYL BENZENE	UG/KG	ND	5
STYRENE	UG/KG	ND	5
TERT-BUTYL BENZENE	UG/KG	ND	5
1,1,1,2-TETRACHLOROETHANE	UG/KG	ND	5
1,1,2,2-TETRACHLOROETHANE	UG/KG	ND	5
TETRACHLOROETHENE	UG/KG	ND	5
TOLUENE	UG/KG	ND	5
TOLUENE DIISOCYANATE	UG/KG	ND	10
TOLUENE DIAMINE	UG/KG	ND	10
TRANS 1,2 DICHLOROETHYLENE	UG/KG	ND	5
1,1,1-TRICHLOROETHANE	UG/KG	ND	5
1,1,2-TRICHLOROETHANE	UG/KG	ND	5
1,2,3 TRICHLOROBENZENE	UG/KG	ND	5
1,2,4 TRICHLOROBENZENE	UG/KG	ND	5
TRICHLOROETHENE	UG/KG	ND	5
TRICHLOROFLUOROMETHANE	UG/KG	ND	5
1,2,3 TRICHLOROPROPANE	UG/KG	ND	5
1,2,4-TRIMETHYLBENZENE	UG/KG	ND	5
1,3,5-TRIMETHYLBENZENE	UG/KG	ND	5
VINYL ACETATE	UG/KG	ND	5
VINYL CHLORIDE	UG/KG	ND	5
M,P-XYLENE	UG/KG	ND	5
O-XYLENE	UG/KG	ND	5
DIBROMOFLUOROMETHANE	%REC/SURR	99	80-120
TOLUENE-D8	%REC/SURR	104	81-117
BROMOFLUOROBENZENE	%REC/SURR	99	74-121
ANALYST	INITIALS	LL	

Comments:

"QC Report"

Title: Low Soil Reagent
Batch: MAS052
Analysis Method: 8260 / SW-846, 3rd Edition, September 1986 and Rev. 1, July 1992.
Extraction Method: N/A

RS Date Analyzed: 30-APR-96
RSD Date Analyzed: 30-APR-96

RS Date Extracted: N/A
RSD Date Extracted: N/A

Parameters:	Spike Added	Sample Conc	RS Conc	RS %Rec	RSD Conc	RSD %Rec	RPD	RPD Lmts	Rec Lmts
1,1-DICHLOROETHENE	50	<5	53	106	55	110	4	30	1-234
TRICHLOROETHENE	50	<5	48	96	49	98	2	30	71-157
BENZENE	50	<5	50	100	52	104	4	30	37-151
TOLUENE	50	<5	50	100	50	100	0	30	47-150
CHLOROBENZENE	50	<5	50	100	50	100	0	30	37-160
Surrogates:									
DIBROMOFLUOROMETHANE				107		105			80-120
TOLUENE-D8				105		102			81-117
BROMOFLUOROBENZENE				106		104			74-121

Comments:

Notes:
N/S = NOT SUBMITTED N/A = NOT APPLICABLE D = DILUTED OUT
UG/KG = PARTS PER BILLION. < = LESS THAN REPORTING LIMIT.
* = VALUES OUTSIDE OF QUALITY CONTROL LIMITS.
SOURCES FOR CONTROL LIMITS ARE INTERNAL LABORATORY QUALITY ASSURANCE PROGRAM AND REFERENCED METHOD.

"QC Report"

Title: Low Soil Matrix
Batch: MAS052
Analysis Method: 8260 / SW-846, 3rd Edition, September 1986 and Rev. 1, July 1992.
Extraction Method: N/A

Dry Weight %: N/A
Sample Spiked: 604500-1

MS Date Analyzed: 30-APR-96
MSD Date Analyzed: 30-APR-96

MS Date Extracted: N/A
MSD Date Extracted: N/A

Parameters:	Spike Added	Sample Conc	MS Conc	MS %Rec	MSD Conc	MSD %Rec	RPD	RPD Lmts	Rec Lmts
1,1-DICHLOROETHENE	50	<5	50	100	53	106	6	42	1-234
TRICHLOROETHENE	50	<5	47	94	48	96	2	20	71-157
BENZENE	50	<5	50	100	52	104	4	20	37-151
TOLUENE	50	<5	47	94	49	98	4	44	47-150
CHLOROBENZENE	50	<5	48	96	50	100	4	20	37-160
Surrogates:									
DIBROMOFLUOROMETHANE				101		103			80-120
TOLUENE-D8				104		104			81-117
BROMOFLUOROBENZENE				102		103			74-121

Comments:

Notes:
N/S = NOT SUBMITTED N/A = NOT APPLICABLE D = DILUTED OUT
UG/KG = PARTS PER BILLION. < = LESS THAN REPORTING LIMIT.
* = VALUES OUTSIDE OF QUALITY CONTROL LIMITS.
SOURCES FOR CONTROL LIMITS ARE INTERNAL LABORATORY QUALITY ASSURANCE PROGRAM AND REFERENCED METHOD.

Common notation for Organic reporting

N/S = NOT SUBMITTED
N/A = NOT APPLICABLE
D = DILUTED OUT
UG/L = PARTS PER BILLION.
UG/KG = PARTS PER BILLION.
MG/KG = PARTS PER MILLION.
MG/L = PARTS PER MILLION.
MG/M3 = MILLIGRAMS PER CUBIC METER.
NG = NANOGRAMS.
UG = MICROGRAMS.
PPBV = PARTS PER BILLION/VOLUME.
< = LESS THAN DETECTION LIMIT.
* = VALUES OUTSIDE OF QUALITY CONTROL LIMITS
J = THE REPORTED VALUE IS EITHER LESS THAN THE REPORTING LIMIT BUT GREATER THAN ZERO, OR QUANTITATED AS A TIC; THEREFORE, IT IS ESTIMATED.
JJ = REPORTED VALUE IS ESTIMATED DUE TO MATRIX INTERFERENCE.
ND = NOT DETECTED ABOVE REPORT LIMIT.
RPT LIMIT = REPORTING LIMITS BASED ON METHOD DETECTION LIMIT STUDIES.
RPD = RELATIVE PERCENT DIFFERENCE (OR DEVIATION)

SOURCES FOR CONTROL LIMITS ARE INTERNAL LABORATORY QUALITY ASSURANCE PROGRAM AND REFERENCED METHOD.

ORGANIC SOILS ARE REPORTED ON A DRY WEIGHT BASIS.

DUE TO THE NATURE OF THE SAMPLE MATRIX, MATRIX SPIKE/MATRIX SPIKE DUPLICATE ANALYSIS CANNOT BE PERFORMED FOR AIR ANALYSIS.

CLP SOW 1991, USEPA CONTRACT LABORATORY PROGRAM, STATEMENT OF WORK FOR ORGANICS ANALYSIS, DOCUMENT NUMBER OLM01.8, AUGUST 1991.

LP = LEVERNE PETERSON	RW = RITA WINGO
DWB = DAVID BOWERS	LD = LARRY DILMORE
DB = DENNIS BESON	DC = DAVID CELESTIAL
LL = LANCE LARSEN	RB = RAFAEL BARRAZA
JA = JENNIFER ALEXANDER	PL = PAUL LESCHENSKY

ANALYTICAL TECHNOLOGIES, INC. 11 East Olive Road Pensacola, Florida 32514 (904) 474-1001

Quality Control Report

Analysis: RCRA METALS

Accession:	603312
Client:	CSX TRANSPORTATION
Project Number:	4365B
Project Name:	GREENVILLE, SC
Project Location:	GREENVILLE, SC
Department:	METALS

ANALYTICAL TECHNOLOGIES, INC. 11 East Olive Road Pensacola, Florida 32514 (904) 474-1001

"Metals Quality Control Report"

Parameter:	SILVER	ARSENIC	BARIUM	CADMIUM	CHROMIUM	MERCURY
Batch Id:	A6S032	R6S032	B6S032	C6S032	H6S032	M4S019
Blank Result:	<1	<5	<1	<0.5	<1	<0.1
Anal. Method:	6010	6010	6010	6010	6010	7471
Prep. Method:	3050	3050	3050	3050	3050	7471
Analysis Date:	21-MAR-96	21-MAR-96	21-MAR-96	21-MAR-96	21-MAR-96	21-MAR-96
Prep. Date:	20-MAR-96	20-MAR-96	20-MAR-96	20-MAR-96	20-MAR-96	21-MAR-96
Sample Duplication						
Sample Dup:	603301-1	603301-1	603301-1	603301-1	603301-1	603301-1
Rept Limit:	<1	<5	<1	<0.5	<1	<0.1
Sample Result:	190	180	400	180	190	2.5
Dup Result:	190	180	390	180	190	2.6
Sample RPD:	0	0	3	0	0	4
Max RPD:	20	20	20	20	20	20
Dry Weight%	N/A	N/A	N/A	N/A	N/A	N/A
Matrix Spike						
Sample Spiked:	603301-1	603301-1	603301-1	603301-1	603301-1	603301-1
Rept Limit:	<1	<5	<1	<0.5	<1	<0.1
Sample Result:	<1	<5	210	<0.5	7	<0.1
Spiked Result:	190	180	400	180	190	2.5
Spike Added:	200	200	200	200	200	2.5
% Recovery:	95	90	95	90	92	100
% Rec Limits:	75-125	75-125	75-125	75-125	75-125	75-125
Dry Weight%	N/A	N/A	N/A	N/A	N/A	N/A
ICV						
ICV Result:	5.1	5.1	5.0	5.1	5.1	0.0042
True Result:	5.0	5.0	5.0	5.0	5.0	0.0040
% Recovery:	102	102	100	102	102	105
% Rec Limits:	90-110	90-110	90-110	90-110	90-110	80-120
LCS						
LCS Result:	130	67	200	130	80	2.25
True Result:	117	62.6	197	123	77.7	2.29
% Recovery:	111	107	102	106	103	98
% Rec Limits:	50-146	49-149	53-131	56-144	54-142	53-156

ANALYTICAL TECHNOLOGIES, INC. 11 East Olive Road Pensacola, Florida 32514 (904) 474-1001

"Metals Quality Control Report"

Parameter:	LEAD	SELENIUM
Batch Id:	P6S032	S6S032
Blank Result:	<5	<10
Anal. Method:	6010	6010
Prep. Method:	3050	3050
Analysis Date:	21-MAR-96	21-MAR-96
Prep. Date:	20-MAR-96	20-MAR-96

Sample Duplication

Sample Dup:	603301-1	603301-1
Rept Limit:	<5	<10
Sample Result:	190	200
Dup Result:	190	200
Sample RPD:	0	0
Max RPD:	20	20
Dry Weight%	N/A	N/A

Matrix Spike

Sample Spiked:	603301-1	603301-1
Rept Limit:	<5	<10
Sample Result:	6	<10
Spiked Result:	190	200
Spike Added:	200	200
% Recovery:	92	100
% Rec Limits:	75-125	75-125
Dry Weight%	N/A	N/A

ICV

ICV Result:	5.3	5.2
True Result:	5.0	5.0
% Recovery:	106	104
% Rec Limits:	90-110	90-110

LCS

LCS Result:	180	93
True Result:	188	86.0
% Recovery:	96	108
% Rec Limits:	53-142	52-149

"Quality Control Comments"

Batch Id:	Comments:
A6S032	ANALYST: JLH
A6S032	The results reported under "Sample Duplication" are the MS/MSD.
A6S032	QC DATA IS REPORTED ON AN AS IS BASIS.
R6S032	ANALYST: JLH
R6S032	The results reported under "Sample Duplication" are the MS/MSD.
R6S032	QC DATA IS REPORTED ON AN AS IS BASIS.
B6S032	ANALYST: JLH
B6S032	The results reported under "Sample Duplication" are the MS/MSD.
B6S032	QC DATA IS REPORTED ON AN AS IS BASIS.
C6S032	ANALYST: JLH
C6S032	The results reported under "Sample Duplication" are the MS/MSD.
C6S032	QC DATA IS REPORTED ON AN AS IS BASIS.
H6S032	ANALYST: JLH
H6S032	The results reported under "Sample Duplication" are the MS/MSD.
H6S032	QC DATA IS REPORTED ON AN AS IS BASIS.
M4S019	ANALYST: GJ
M4S019	The results reported under "Sample Duplication" are the MS/MSD.
P6S032	ANALYST: JLH
P6S032	The results reported under "Sample Duplication" are the MS/MSD.
P6S032	QC DATA IS REPORTED ON AN AS IS BASIS.
S6S032	ANALYST: JLH
S6S032	The results reported under "Sample Duplication" are the MS/MSD.
S6S032	QC DATA IS REPORTED ON AN AS IS BASIS.

----- Common Footnotes Metals -----

N/A = NOT APPLICABLE.
N/S = NOT SUBMITTED.
N/C = SAMPLE AND DUPLICATE RESULTS ARE AT OR BELOW ATI REPORTING LIMIT; THEREFORE, THE RPD IS "NOT CALCULABLE" AND NO CONTROL LIMITS APPLY.
N/D = NOT DETECTED.
DISS. OR D = DISSOLVED
T & D = TOTAL AND DISSOLVED
R = REACTIVE
T = TOTAL
G = SAMPLE AND/OR DUPLICATE RESULT IS BELOW 5 X ATI REPORTING LIMIT AND THE ABSOLUTE DIFFERENCE BETWEEN THE SAMPLE AND DUPLICATE RESULT IS AT OR BELOW ATI REPORTING LIMIT; THEREFORE, THE RESULTS ARE "IN CONTROL".
Q = THE ANALYTICAL (POST-DIGESTION) SPIKE IS REPORTED DUE TO PERCENT RECOVERY BEING OUTSIDE ACCEPTANCE LIMITS ON THE MATRIX (PRE-DIGESTION) SPIKE.
# = ELEVATED REPORTING LIMIT DUE TO INSUFFICIENT SAMPLE.
+ = ELEVATED REPORTING LIMIT DUE TO DILUTION INTO CALIBRATION RANGE.
* = ELEVATED REPORTING LIMIT DUE TO MATRIX INTERFERENCE. (DILUTION PRIOR TO ANALYSIS)
@ = ADJUSTED REPORTING LIMIT DUE TO SAMPLE MATRIX. (DILUTION PRIOR TO DIGESTION)
P = ANALYTICAL (POST DIGESTION) SPIKE.
I = DUPLICATE INJECTION.
& = AUTOMATED
F = SAMPLE SPIKED > 4 X SPIKE CONCENTRATION.
N/C+ = NOT CALCULABLE
N/C* = NOT CALCULABLE; SAMPLE SPIKED > 4 X SPIKE CONCENTRATION.
H = SAMPLE AND/OR DUPLICATE RESULT IS BELOW 5 X ATI REPORTING LIMIT AND THE ABSOLUTE DIFFERENCE BETWEEN THE RESULTS EXCEEDS THE ATI REPORTING LIMIT; THEREFORE, THE RESULTS ARE "OUT OF CONTROL".
A = SAMPLE AND DUPLICATE RESULTS ARE "OUT OF CONTROL".
Z = THE SAMPLE RESULT FOR THE SPIKE IS BELOW THE REPORTING LIMIT. HOWEVER, THIS RESULT IS REPORTED FOR ACCURATE QC CALCULATIONS.
NH= SAMPLE AND / OR DUPLICATE RESULT IS BELOW 5 X ATI REPORTING LIMIT AND THE ABSOLUTE DIFFERENCE BETWEEN THE RESULTS EXCEEDS THE ATI REPORTING LIMIT; THEREFORE, THE RESULTS ARE "OUT OF CONTROL". SAMPLE IS NON-HOMOGENEOUS.
J = (FLORIDA DEP 'J' FLAG) - MATRIX SPIKE AND POST SPIKE RECOVERY IS OUT OF THE ACCEPTABLE RANGE. SEE OUT OF CONTROL EVENTS FORM.
U = (FLORIDA DEP 'U' FLAG) - THE COMPOUND WAS ANALYZED FOR, BUT NOT DETECTED.
S = METHOD OF STANDARD ADDITIONS (MSA) WAS PERFORMED ON THIS SAMPLE.

FROM ANALYSIS REPORT:
RL= REPORTING LIMIT BASED ON METHOD DETECTION LIMIT STUDIES.
Q= QUALIFIER (FOOTNOTE)

FROM QUALITY CONTROL REPORT:
RPD= RELATIVE PERCENT DEVIATION.
RPT LIMIT= REPORTING LIMIT BASED ON METHOD DETECTION LIMIT STUDIES.

NOTE: THE UNITS REPORTED ON THE QUALITY CONTROL REPORT ARE REPORTED ON AN AS RUN BASIS.

SW-846, 3rd Edition, September 1986 and Revision 1, July 1992.
EPA 600/4-79-020, Revised March 1983.
NIOSH Manual of Analytical Methods, 3rd Edition.

GJ = GARY JACOBS
JLH = JAMES L. HERED
CD = CHRISTY DRAPER
JR = JOHN REED
LV = LASSANDRA VON APPEN

ANALYTICAL TECHNOLOGIES, INC. 11 East Olive Road Pensacola, Florida 32514 (904) 474-1001

Quality Control Report

Analysis: SW 846 8260 TABLE SIX

Accession:	603312
Client:	CSX TRANSPORTATION
Project Number:	4365B
Project Name:	GREENVILLE, SC
Project Location:	GREENVILLE, SC
Department:	ORGANIC/MS

ANALYTICAL TECHNOLOGIES, INC. 11 East Olive Road Pensacola, Florida 32514 (904) 474-1001

"QC Report"

Title: Low Soil Blank
Batch: MAS027
Analysis Method: 8260 / SW-846, 3rd Edition, September 1986 and Rev. 1, July 1992.
Extraction Method: N/A

Blank Id: A Date Analyzed: 25-MAR-96 Date Extracted: N/A

Parameters:	Units:	Results:	Reporting Limits:
ACROLEIN	UG/KG	ND	100
ACETONE	UG/KG	ND	10
ACETONITRILE	UG/KG	ND	100
ACRYLONITRILE	UG/KG	ND	100
ALLYL CHLORIDE	UG/KG	ND	100
BENZENE	UG/KG	ND	5
BROMOCHLOROMETHANE	UG/KG	ND	5
BROMOBENZENE	UG/KG	ND	5
BROMODICHLOROMETHANE	UG/KG	ND	5
BROMOFORM	UG/KG	ND	5
BROMOMETHANE	UG/KG	ND	5
2-BUTANONE	UG/KG	ND	5
CARBON DISULFIDE	UG/KG	ND	5
CHLOROPRENE	UG/KG	ND	5
CARBON TETRACHLORIDE	UG/KG	ND	5
CHLOROBENZENE	UG/KG	ND	5
CHLOROETHANE	UG/KG	ND	5
CHLOROFORM	UG/KG	ND	5
CHLOROMETHANE	UG/KG	ND	5
2-CHLOROTOLUENE	UG/KG	ND	5
4-CHLOROTOLUENE	UG/KG	ND	5
CIS 1,2 DICHLOROETHYLENE	UG/KG	ND	5
CHLORODIBROMOMETHANE	UG/KG	ND	5
1,2 DIBROMOETHANE	UG/KG	ND	5
1,2-DIBROMO-3-CHLOROPROPANE	UG/KG	ND	5
1,4-DICHLORO-2-BUTENE	UG/KG	ND	5
DIBROMOMETHANE	UG/KG	ND	5
1,4-DICHLOROBENZENE	UG/KG	ND	5
1,3-DICHLOROBENZENE	UG/KG	ND	5
1,2-DICHLOROBENZENE	UG/KG	ND	5
DICHLORODIFLUOROMETHANE	UG/KG	ND	5
1,1-DICHLOROETHANE	UG/KG	ND	5
1,2-DICHLOROETHANE	UG/KG	ND	5
1,1-DICHLOROETHENE	UG/KG	ND	5
1,3 DICHLOROPROPANE	UG/KG	ND	5
2,2-DICHLOROPROPANE	UG/KG	ND	5
1,2-DICHLOROPROPANE	UG/KG	ND	5
CIS-1,3-DICHLOROPROPENE	UG/KG	ND	5
TRANS-1,3-DICHLOROPROPENE	UG/KG	ND	5
1,1 DICHLOROPROPENE	UG/KG	ND	5
ETHYL BENZENE	UG/KG	ND	5
METHYL METHACRYLATE	UG/KG	ND	5
METHACRYLONITRILE	UG/KG	ND	5
4-METHYL-2-PENTANONE	UG/KG	ND	5
HEXACHLOROBUTADIENE	UG/KG	ND	5
2-HEXANONE	UG/KG	ND	5

ANALYTICAL TECHNOLOGIES, INC. 11 East Olive Road Pensacola, Florida 32514 (904) 474-1001

Date 02-Apr-96

"QC Report"

Title: Low Soil Blank
Batch: MAS027
Analysis Method: 8260 / SW-846, 3rd Edition, September 1986 and Rev. 1, July 1992.
Extraction Method: N/A

Parameters:	Units:	Results:	Reporting Limits:
ISOPROPYL BENZENE	UG/KG	ND	5
ISOBUTYL ALCOHOL	UG/KG	ND	10
IODOMETHANE	UG/KG	ND	5
P-ISOPROPYLTOLUENE	UG/KG	ND	5
METHYLENE CHLORIDE	UG/KG	ND	5
NAPHTHALENE	UG/KG	ND	5
N-BUTYL BENZENE	UG/KG	ND	5
N-PROPYL BENZENE	UG/KG	ND	5
PROPIONITRILE	UG/KG	ND	5
SEC-BUTYL BENZENE	UG/KG	ND	5
STYRENE	UG/KG	ND	5
TERT-BUTYL BENZENE	UG/KG	ND	5
1,1,1,2-TETRACHLOROETHANE	UG/KG	ND	5
1,1,2,2-TETRACHLOROETHANE	UG/KG	ND	5
TETRACHLOROETHENE	UG/KG	ND	5
TOLUENE	UG/KG	ND	5
TOLUENE DIISOCYANATE	UG/KG	ND	10
TOLUENE DIAMINE	UG/KG	ND	10
TRANS 1,2 DICHLOROETHYLENE	UG/KG	ND	5
1,1,1-TRICHLOROETHANE	UG/KG	ND	5
1,1,2-TRICHLOROETHANE	UG/KG	ND	5
1,2,3 TRICHLOROBENZENE	UG/KG	ND	5
1,2,4 TRICHLOROBENZENE	UG/KG	ND	5
TRICHLOROETHENE	UG/KG	ND	5
TRICHLOROFLUOROMETHANE	UG/KG	ND	5
1,2,3 TRICHLOROPROPANE	UG/KG	ND	5
1,2,4-TRIMETHYLBENZENE	UG/KG	ND	5
1,3,5-TRIMETHYLBENZENE	UG/KG	ND	5
VINYL ACETATE	UG/KG	ND	5
VINYL CHLORIDE	UG/KG	ND	5
M,P-XYLENE	UG/KG	ND	5
O-XYLENE	UG/KG	ND	5
DIBROMOFLUOROMETHANE	%REC/SURR	98	80-120
TOLUENE-D8	%REC/SURR	103	81-117
BROMOFLUOROBENZENE	%REC/SURR	99	74-121
ANALYST	INITIALS	LL	

Comments:

"QC Report"

Title: Water Blank
Batch: MAW027
Analysis Method: 8260 / SW-846, 3rd Edition, September 1986 and Rev. 1, July 1992.
Extraction Method: N/A

Blank Id: A Date Analyzed: 25-MAR-96 Date Extracted: N/A

Parameters:	Units:	Results:	Reporting Limits:
ACROLEIN	UG/L	ND	100
ACETONE	UG/L	ND	10
ACETONITRILE	UG/L	ND	100
ACRYLONITRILE	UG/L	ND	100
ALLYL CHLORIDE	UG/L	ND	100
BENZENE	UG/L	ND	5
BROMOCHLOROMETHANE	UG/L	ND	5
BROMOBENZENE	UG/L	ND	5
BROMODICHLOROMETHANE	UG/L	ND	5
BROMOFORM	UG/L	ND	5
BROMOMETHANE	UG/L	ND	5
2-BUTANONE	UG/L	ND	5
CARBON DISULFIDE	UG/L	ND	5
CHLOROPRENE	UG/L	ND	5
CARBON TETRACHLORIDE	UG/L	ND	5
CHLOROBENZENE	UG/L	ND	5
CHLOROETHANE	UG/L	ND	5
CHLOROFORM	UG/L	ND	5
CHLOROMETHANE	UG/L	ND	5
2-CHLOROTOLUENE	UG/L	ND	5
4-CHLOROTOLUENE	UG/L	ND	5
CIS 1,2 DICHLOROETHYLENE	UG/L	ND	5
CHLORODIBROMOMETHANE	UG/L	ND	5
1,2 DIBROMOETHANE	UG/L	ND	5
1,2-DIBROMO-3-CHLOROPROPANE	UG/L	ND	5
1,4-DICHLORO-2-BUTENE	UG/L	ND	5
DIBROMOMETHANE	UG/L	ND	5
1,4-DICHLOROBENZENE	UG/L	ND	5
1,3-DICHLOROBENZENE	UG/L	ND	5
1,2-DICHLOROBENZENE	UG/L	ND	5
DICHLORODIFLUOROMETHANE	UG/L	ND	5
1,1-DICHLOROETHANE	UG/L	ND	5
1,2-DICHLOROETHANE	UG/L	ND	5
1,1-DICHLOROETHENE	UG/L	ND	5
1,3 DICHLOROPROPANE	UG/L	ND	5
2,2-DICHLOROPROPANE	UG/L	ND	5
1,2-DICHLOROPROPANE	UG/L	ND	5
CIS-1,3-DICHLOROPROPENE	UG/L	ND	5
TRANS-1,3-DICHLOROPROPENE	UG/L	ND	5
1,1 DICHLOROPROPENE	UG/L	ND	5
ETHYL BENZENE	UG/L	ND	5
METHYL METHACRYLATE	UG/L	ND	5
METHACRYLONITRILE	UG/L	ND	5
4-METHYL-2-PENTANONE	UG/L	ND	5
HEXACHLOROBUTADIENE	UG/L	ND	5
2-HEXANONE	UG/L	ND	5

ANALYTICAL TECHNOLOGIES, INC. 11 East Olive Road Pensacola, Florida 32514 (904) 474-1001

"QC Report"

Title: Water Blank
Batch: MAW027
Analysis Method: 8260 / SW-846, 3rd Edition, September 1986 and Rev. 1, July 1992.
Extraction Method: N/A

Parameters:	Units:	Results:	Reporting Limits:
ISOPROPYL BENZENE	UG/L	ND	5
ISOBUTYL ALCOHOL	UG/L	ND	10
IODOMETHANE	UG/L	ND	5
P-ISOPROPYLTOLUENE	UG/L	ND	5
METHYLENE CHLORIDE	UG/L	ND	5
NAPHTHALENE	UG/L	ND	5
N-BUTYL BENZENE	UG/L	ND	5
N-PROPYL BENZENE	UG/L	ND	5
PROPIONITRILE	UG/L	ND	5
SEC-BUTYL BENZENE	UG/L	ND	5
STYRENE	UG/L	ND	5
TERT-BUTYL BENZENE	UG/L	ND	5
1,1,1,2-TETRACHLOROETHANE	UG/L	ND	5
1,1,2,2-TETRACHLOROETHANE	UG/L	ND	5
TETRACHLOROETHENE	UG/L	ND	5
TOLUENE	UG/L	ND	5
TOLUENE DIISOCYANATE	UG/L	ND	10
TOLUENE DIAMINE	UG/L	ND	10
TRANS 1,2 DICHLOROETHYLENE	UG/L	ND	5
1,1,1-TRICHLOROETHANE	UG/L	ND	5
1,1,2-TRICHLOROETHANE	UG/L	ND	5
1,2,3 TRICHLOROBENZENE	UG/L	ND	5
1,2,4 TRICHLOROBENZENE	UG/L	ND	5
TRICHLOROETHENE	UG/L	ND	5
TRICHLOROFLUOROMETHANE	UG/L	ND	5
1,2,3 TRICHLOROPROPANE	UG/L	ND	5
1,2,4-TRIMETHYLBENZENE	UG/L	ND	5
1,3,5-TRIMETHYLBENZENE	UG/L	ND	5
VINYL ACETATE	UG/L	ND	5
VINYL CHLORIDE	UG/L	ND	5
M,P-XYLENE	UG/L	ND	5
O-XYLENE	UG/L	ND	5
DIBROMOFLUOROMETHANE	%REC/SURR	98	89-116
TOLUENE-D8	%REC/SURR	103	88-110
BROMOFLUOROBENZENE	%REC/SURR	99	86-115
ANALYST	INITIALS	LL	

Comments:

ANALYTICAL TECHNOLOGIES, INC. 11 East Olive Road Pensacola, Florida 32514 (904) 474-1001

"QC Report"

Title: Low Soil Reagent
Batch: MAS027
Analysis Method: 8260 / SW-846, 3rd Edition, September 1986 and Rev. 1, July 1992.
Extraction Method: N/A

RS Date Analyzed: 25-MAR-96
RSD Date Analyzed: 25-MAR-96

RS Date Extracted: N/A
RSD Date Extracted: N/A

Parameters:	Spike Added	Sample Conc	RS Conc	RS %Rec	RSD Conc	RSD %Rec	RPD	RPD Lmts	Rec Lmts
1,1-DICHLOROETHENE	50	<5	45	90	45	90	0	30	1-234
TRICHLOROETHENE	50	<5	46	92	46	92	0	30	71-157
BENZENE	50	<5	49	98	50	100	2	30	37-151
TOLUENE	50	<5	46	92	46	92	0	30	47-150
CHLOROBENZENE	50	<5	46	92	47	94	2	30	37-160
Surrogates:									
DIBROMOFLUOROMETHANE				99		98			80-120
TOLUENE-D8				107		106			81-117
BROMOFLUOROBENZENE				100		101			74-121

Comments:

Notes:
N/S = NOT SUBMITTED N/A = NOT APPLICABLE D = DILUTED OUT
UG/KG = PARTS PER BILLION. < = LESS THAN REPORTING LIMIT.
* = VALUES OUTSIDE OF QUALITY CONTROL LIMITS.
SOURCES FOR CONTROL LIMITS ARE INTERNAL LABORATORY QUALITY ASSURANCE PROGRAM AND REFERENCED METHOD.

ANALYTICAL TECHNOLOGIES, INC. 11 East Olive Road Pensacola, Florida 32514 (904) 474-1001

"QC Report"

Title: Water Reagent
Batch: MAW027
Analysis Method: 8260 / SW-846, 3rd Edition, September 1986 and Rev. 1, July 1992.
Extraction Method: N/A

RS Date Analyzed: 25-MAR-96
RSD Date Analyzed: 25-MAR-96

RS Date Extracted: N/A
RSD Date Extracted: N/A

Parameters:	Spike Added	Sample Conc	RS Conc	RS %Rec	RSD Conc	RSD %Rec	RPD	RPD Lmts	Rec Lmts
1,1-DICHLOROETHENE	50	<5	45	90	45	90	0	30	72-122
TRICHLOROETHENE	50	<5	46	92	46	92	0	30	81-114
BENZENE	50	<5	49	98	50	100	2	30	87-120
TOLUENE	50	<5	46	92	46	92	0	30	83-120
CHLOROBENZENE	50	<5	46	92	47	94	2	30	87-113
Surrogates:									
DIBROMOFLUOROMETHANE				99		98			89-116
TOLUENE-D8				107		106			88-110
BROMOFLUOROBENZENE				100		101			86-115

Comments:

Notes:
N/S = NOT SUBMITTED N/A = NOT APPLICABLE D = DILUTED OUT
UG/L = PARTS PER BILLION. < = LESS THAN REPORTING LIMIT.
* = VALUES OUTSIDE OF QUALITY CONTROL LIMITS.
SOURCES FOR CONTROL LIMITS ARE INTERNAL LABORATORY QUALITY ASSURANCE PROGRAM AND REFERENCED METHOD.

ANALYTICAL TECHNOLOGIES, INC. 11 East Olive Road Pensacola, Florida 32514 (904) 474-1001

"QC Report"

Title: Low Soil Matrix
Batch: MAS027
Analysis Method: 8260 / SW-846, 3rd Edition, September 1986 and Rev. 1, July 1992.
Extraction Method: N/A

Dry Weight %: 70
Sample Spiked: 603312-2

MS Date Analyzed: 26-MAR-96
MSD Date Analyzed: 26-MAR-96

MS Date Extracted: N/A
MSD Date Extracted: N/A

Parameters:	Spike Added	Sample Conc	MS Conc	MS %Rec	MSD Conc	MSD %Rec	RPD	RPD Lmts	Rec Lmts
1,1-DICHLOROETHENE	71	<7.1	70	99	66	93	6	42	1-234
TRICHLOROETHENE	71	<7.1	70	99	64	90	10	20	71-157
BENZENE	71	<7.1	79	111	71	100	10	20	37-151
TOLUENE	71	<7.1	70	99	63	89	11	44	47-150
CHLOROBENZENE	71	<7.1	71	100	64	90	11	20	37-160
Surrogates:									
DIBROMOFLUOROMETHANE				99		102			80-120
TOLUENE-D8				106		105			81-117
BROMOFLUOROBENZENE				101		109			74-121

Comments:

Notes:
N/S = NOT SUBMITTED N/A = NOT APPLICABLE D = DILUTED OUT
UG/KG = PARTS PER BILLION. < = LESS THAN REPORTING LIMIT.
* = VALUES OUTSIDE OF QUALITY CONTROL LIMITS.
SOURCES FOR CONTROL LIMITS ARE INTERNAL LABORATORY QUALITY ASSURANCE PROGRAM AND REFERENCED METHOD.

"QC Report"

Title: Water Matrix
Batch: MAW027
Analysis Method: 8260 / SW-846, 3rd Edition, September 1986 and Rev. 1, July 1992.
Extraction Method: N/A

Dry Weight %: N/A
Sample Spiked: 603315-5

MS Date Analyzed: 25-MAR-96
MSD Date Analyzed: 25-MAR-96

MS Date Extracted: N/A
MSD Date Extracted: N/A

Parameters:	Spike Added	Sample Conc	MS Conc	MS %Rec	MSD Conc	MSD %Rec	RPD	RPD Lmts	Rec Lmts
1,1-DICHLOROETHENE	50	<5	42	84	44	88	5	14	74-124
TRICHLOROETHENE	50	<5	46	92	47	94	2	24	79-116
BENZENE	50	<5	52	104	52	104	0	16	65-142
TOLUENE	50	<5	47	94	48	96	2	15	89-114
CHLOROBENZENE	50	<5	46	92	47	94	2	15	85-116
Surrogates:									
DIBROMOFLUOROMETHANE				98		98			89-116
TOLUENE-D8				106		107			88-110
BROMOFLUOROBENZENE				104		107			86-115

Comments:

Notes:
N/S = NOT SUBMITTED N/A = NOT APPLICABLE D = DILUTED OUT
UG/L = PARTS PER BILLION. < = LESS THAN REPORTING LIMIT.
* = VALUES OUTSIDE OF QUALITY CONTROL LIMITS.
SOURCES FOR CONTROL LIMITS ARE INTERNAL LABORATORY QUALITY ASSURANCE PROGRAM AND REFERENCED METHOD.

Common notation for Organic reporting

N/S = NOT SUBMITTED
N/A = NOT APPLICABLE
D = DILUTED OUT
UG/L = PARTS PER BILLION.
UG/KG = PARTS PER BILLION.
MG/KG = PARTS PER MILLION.
MG/L = PARTS PER MILLION.
MG/M3 = MILLIGRAMS PER CUBIC METER.
NG = NANOGRAMS.
UG = MICROGRAMS.
PPBV = PARTS PER BILLION/VOLUME.
< = LESS THAN DETECTION LIMIT.
* = VALUES OUTSIDE OF QUALITY CONTROL LIMITS
J = THE REPORTED VALUE IS EITHER LESS THAN THE REPORTING LIMIT BUT GREATER THAN ZERO, OR QUANTITATED AS A TIC; THEREFORE, IT IS ESTIMATED.
JJ = REPORTED VALUE IS ESTIMATED DUE TO MATRIX INTERFERENCE.
ND = NOT DETECTED ABOVE REPORT LIMIT.
RPT LIMIT = REPORTING LIMITS BASED ON METHOD DETECTION LIMIT STUDIES.
RPD = RELATIVE PERCENT DIFFERENCE (OR DEVIATION)

SOURCES FOR CONTROL LIMITS ARE INTERNAL LABORATORY QUALITY ASSURANCE PROGRAM AND REFERENCED METHOD.

ORGANIC SOILS ARE REPORTED ON A DRY WEIGHT BASIS.

DUE TO THE NATURE OF THE SAMPLE MATRIX, MATRIX SPIKE/MATRIX SPIKE DUPLICATE ANALYSIS CANNOT BE PERFORMED FOR AIR ANALYSIS.

CLP SOW 1991, USEPA CONTRACT LABORATORY PROGRAM, STATEMENT OF WORK FOR ORGANICS ANALYSIS, DOCUMENT NUMBER OLM01.8, AUGUST 1991.

LP = LEVERNE PETERSON	RW = RITA WINGO
DWB = DAVID BOWERS	LD = LARRY DILMORE
DB = DENNIS BESON	DC = DAVID CELESTIAL
LL = LANCE LARSON	RB = RAFAEL BARRAZA
JA = JENNIFER ALEXANDER	PL = PAUL LESCHENSKY

ANALYTICAL TECHNOLOGIES, INC. 11 East Olive Road Pensacola, Florida 32514 (904) 474-1001

Quality Control Report

Analysis: BN EXTRACTABLES (8270)

Accession:	603312
Client:	CSX TRANSPORTATION
Project Number:	4365B
Project Name:	GREENVILLE, SC
Project Location:	GREENVILLE, SC
Department:	ORGANIC/MS

"QC Report"

Title: Soil Blank
Batch: ALS021
Analysis Method: 8270 / SW-846, 3rd Edition, September 1986 and Rev. 1, July 1992.
Extraction Method: 3550 / SW-846, 3rd Edition, September 1986 and Rev. 1, July 1992.

Blank Id: A Date Analyzed: 03-APR-96 Date Extracted: 19-MAR-96

Parameters:	Units:	Results:	Reporting Limits:
P-CHLORO-M-CRESOL	UG/KG	ND	10
2-CHLOROPHENOL	UG/KG	ND	10
O-CRESOL	UG/KG	ND	10
M,P CRESOL	UG/KG	ND	10
2,4-DICHLOROPHENOL	UG/KG	ND	10
2,6-DICHLOROPHENOL	UG/KG	ND	10
2,4-DIMETHYLPHENOL	UG/KG	ND	10
4,6-DINITRO-O-CRESOL	UG/KG	ND	50
2,4-DINITROPHENOL	UG/KG	ND	10
2-NITROPHENOL	UG/KG	ND	10
4-NITROPHENOL	UG/KG	ND	50
PENTACHLOROPHENOL	UG/KG	ND	50
PHENOL	UG/KG	ND	10
2,3,4,6-TETRACHLOROPHENOL	UG/KG	ND	10
2,4,5-TRICHLOROPHENOL	UG/KG	ND	50
2,4,6-TRICHLOROPHENOL	UG/KG	ND	10
ACENAPHTHENE	UG/KG	ND	10
ACENAPHTHYLENE	UG/KG	ND	10
ACETOPHENONE	UG/KG	ND	10
2-ACETYLAMINOFLUORENE	UG/KG	ND	10
4-AMINOBIPHENYL	UG/KG	ND	10
ANILINE	UG/KG	ND	10
ANTHRACENE	UG/KG	ND	10
ARAMITE	UG/KG	ND	10
BENZO (A) ANTHRACENE	UG/KG	ND	10
BENZO (A) PYRENE	UG/KG	ND	10
BENZO (B) FLUORANTHENE	UG/KG	ND	10
BENZO (G,H,I) PERYLENE	UG/KG	ND	10
BENZO (K) FLUORANTHENE	UG/KG	ND	10
BENZYL ALCOHOL	UG/KG	ND	10
BIS(2-CHLORO-1-METHYLETHYL)ETHER	UG/KG	ND	10
BIS(2-CHLOROETHOXY)METHANE	UG/KG	ND	10
BIS(2-CHLOROETHYL)ETHER	UG/KG	ND	10
BIS(2-ETHYLHEXYL)PHTHALATE	UG/KG	ND	10
4-BROMOPHENYL PHENYL ETHER	UG/KG	ND	10
BUTYLBENZYL PHTHALATE	UG/KG	ND	10
P-CHLOROANILINE	UG/KG	ND	10
CHLOROBENZILATE	UG/KG	ND	10
2-CHLORONAPHTHALENE	UG/KG	ND	10
4-CHLOROPHENYL PHENYL ETHER	UG/KG	ND	10
CHRYSENE	UG/KG	ND	10
DIALLATE	UG/KG	ND	10
DIBENZO (A,H) ANTHRACENE	UG/KG	ND	10
DIBENZOFURAN	UG/KG	ND	10
1,2-DICHLOROBENZENE	UG/KG	ND	10
1,3-DICHLOROBENZENE	UG/KG	ND	10

"QC Report"

Title: Soil Blank
Batch: ALS021
Analysis Method: 8270 / SW-846, 3rd Edition, September 1986 and Rev. 1, July 1992.
Extraction Method: 3550 / SW-846, 3rd Edition, September 1986 and Rev. 1, July 1992.

Parameters:	Units:	Results:	Reporting Limits:
1,4-DICHLOROBENZENE	UG/KG	ND	10
3,3'-DICHLOROBENZIDINE	UG/KG	ND	50
DIETHYLPHTHALATE	UG/KG	ND	10
DIMETHOATE	UG/KG	ND	10
P-DIMETHYLAMINOAZOBENZENE	UG/KG	ND	10
7,12-DIMETHYLBENZ(A)ANTHRACENE	UG/KG	ND	10
3,3'-DIMETHYLBENZIDINE	UG/KG	ND	10
A,A-DIMETHYLPHENETHYLAMINE	UG/KG	ND	10
DIMETHYLPHTHALATE	UG/KG	ND	10
DI-N-BUTYLPHTHALATE	UG/KG	ND	10
M-DINITROBENZENE	UG/KG	ND	10
2,4-DINITROTOLUENE	UG/KG	ND	10
2,6-DINITROTOLUENE	UG/KG	ND	10
DI-N-OCTYLPHTHALATE	UG/KG	ND	10
DIPHENYLAMINE	UG/KG	ND	10
ETHYL METHANESULFONATE	UG/KG	ND	10
FAMPHUR	UG/KG	ND	10
FLUORANTHENE	UG/KG	ND	10
FLUORENE	UG/KG	ND	10
HEXACHLOROBENZENE	UG/KG	ND	10
HEXACHLOROBUTADIENE	UG/KG	ND	10
HEXACHLOROCYCLOPENTADIENE	UG/KG	ND	10
HEXACHLOROETHANE	UG/KG	ND	10
HEXACHLOROPHENE	UG/KG	ND	10
HEXACHLOROPROPENE	UG/KG	ND	10
INDENO (1,2,3-CD) PYRENE	UG/KG	ND	10
ISODRIN	UG/KG	ND	10
ISOPHORONE	UG/KG	ND	10
ISOSAFROLE	UG/KG	ND	10
KEPONE	UG/KG	ND	10
METHAPYRILENE	UG/KG	ND	10
3-METHYLCHOLANTHRENE	UG/KG	ND	10
METHYL METHANESULFONATE	UG/KG	ND	10
1-METHYLNAPHTHALENE	UG/KG	ND	10
2-METHYLNAPHTHALENE	UG/KG	ND	10
NAPHTHALENE	UG/KG	ND	10
1,4-NAPHTHOQUINONE	UG/KG	ND	10
1-NAPHTHYLAMINE	UG/KG	ND	10
2-NAPHTHYLAMINE	UG/KG	ND	10
2-NITROANILINE	UG/KG	ND	50
3-NITROANILINE	UG/KG	ND	50
4-NITROANILINE	UG/KG	ND	50
NITROBENZENE	UG/KG	ND	10
5-NITRO-O-TOLUIDINE	UG/KG	ND	10
4-NITROQUINOLINE-1-OXIDE	UG/KG	ND	10
N-NITROSODIETHYLAMINE	UG/KG	ND	10
N-NITROSODIMETHYLAMINE	UG/KG	ND	10

ANALYTICAL TECHNOLOGIES, INC. 11 East Olive Road Pensacola, Florida 32514 (904) 474-1001

"QC Report"

Title: Soil Blank
Batch: ALS021
Analysis Method: 8270 / SW-846, 3rd Edition, September 1986 and Rev. 1, July 1992.
Extraction Method: 3550 / SW-846, 3rd Edition, September 1986 and Rev. 1, July 1992.

Parameters:	Units:	Results:	Reporting Limits:
N-NITROSODI-N-BUTYLAMINE	UG/KG	ND	10
N-NITROSODIPHENYLAMINE	UG/KG	ND	10
N-NITROSOMETHYLETHYLAMINE	UG/KG	ND	10
N-NITROSOMORPHOLINE	UG/KG	ND	10
N-NITROSOPIPERIDINE	UG/KG	ND	10
N-NITROSOPYRROLIDINE	UG/KG	ND	10
PARATHION	UG/KG	ND	10
PENTACHLOROBENZENE	UG/KG	ND	10
PENTACHLOROETHANE	UG/KG	ND	10
PENTACHLORONITROBENZENE	UG/KG	ND	10
PHENACETIN	UG/KG	ND	10
PHENANTHRENE	UG/KG	ND	10
2-PICOLINE	UG/KG	ND	10
P-PHENYLENEDIAMINE	UG/KG	ND	10
PRONAMIDE	UG/KG	ND	10
PYRENE	UG/KG	ND	10
PYRIDINE	UG/KG	ND	10
SAFROLE	UG/KG	ND	10
SULFOTEPP	UG/KG	ND	10
1,2,4,5-TETRACHLOROBENZENE	UG/KG	ND	10
THIONAZIN	UG/KG	ND	10
O-TOLUIDINE	UG/KG	ND	10
1,2,4 TRICHLOROBENZENE	UG/KG	ND	10
SYM-TRINITROBENZENE	UG/KG	ND	10
O,O,O-TRIETHYL PHOSPHOROTHIATE	UG/KG	ND	10
BENZIDINE	UG/KG	ND	10
BIS(2-CHLOROISOPROPYL)ETHER	UG/KG	ND	10
2-(SEC BUTYL)4,6-DINITRO-PHENOL(DINOSEB)	UG/KG	ND	10
N-NITROSO-DI-N-PROPYLAMINE	UG/KG	ND	10
2-FLUOROBIPHENYL	%REC/SURR	76	30-115
TERPHENYL-D14	%REC/SURR	90	18-137
NITROBENZENE-D5	%REC/SURR	66	23-120
2-FLUOROPHENOL	%REC/SURR	71	25-121
PHENOL-D6	%REC/SURR	68	24-113
2,4,6-TRIBROMOPHENOL	%REC/SURR	70	19-122
ANALYST	INITIALS	PL	

Comments:

"QC Report"

Title: Soil Reagent
Batch: ALS021
Analysis Method: 8270 / SW-846, 3rd Edition, September 1986 and Rev. 1, July 1992.
Extraction Method: 3550 / SW-846, 3rd Edition, September 1986 and Rev. 1, July 1992.

RS Date Analyzed: 03-APR-96
RSD Date Analyzed: 03-APR-96

RS Date Extracted: 19-MAR-96
RSD Date Extracted: 19-MAR-96

Parameters:	Spike Added	Sample Conc	RS Conc	RS %Rec	RSD Conc	RSD %Rec	RPD	RPD Lmts	Rec Lmts
PHENOL	3333	<330	2200	66	2500	75	13	27	5-112
2-CHLOROPHENOL	3333	<330	2200	66	2533	76	14	32	38-123
1,4-DICHLOROBENZENE	1667	<330	1200	72	1400	84	15	25	50-111
N-NITRO-DI-N-PROPYLAMINE	1667	<330	1100	66	1200	72	9	25	39-121
1,2,4 TRICHLOROBENZENE	1667	<330	1200	72	1367	82	13	24	49-115
4-CHLORO-3-METHYLPHENOL	3333	<330	2400	72	2633	79	9	26	37-128
ACENAPHTHENE	1667	<330	1333	80	1367	82	2	19	53-115
4-NITROPHENOL	3333	<1700	2300	69	2400	72	4	50	32-126
2,4-DINITROTOLUENE	1667	<330	1167	70	1233	74	6	21	56-118
PENTACHLOROPHENOL	3333	<1700	2700	81	2800	84	4	20	31-146
PYRENE	1667	<330	1067	64	1133	68	6	23	52-115
Surrogates:									
NITROBENZENE-D5				75		84			23-120
2-FLUOROBIPHENYL				84		89			30-115
TERPHENYL-D14				92		94			18-137
PHENOL-D6				76		86			24-113
2-FLUOROPHENOL				77		86			25-121
2,4,6-TRIBROMOPHENOL				79		81			19-122

Comments:

Notes:
N/S = NOT SUBMITTED N/A = NOT APPLICABLE D = DILUTED OUT
UG/KG = PARTS PER BILLION. < = LESS THAN REPORTING LIMIT.
* = VALUES OUTSIDE OF QUALITY CONTROL LIMITS.
SOURCES FOR CONTROL LIMITS ARE INTERNAL LABORATORY QUALITY ASSURANCE PROGRAM AND REFERENCED METHOD.

ANALYTICAL TECHNOLOGIES, INC. 11 East Olive Road Pensacola, Florida 32514 (904) 474-1001

"QC Report"

Title: Soil Matrix
Batch: ALS021
Analysis Method: 8270 / SW-846, 3rd Edition, September 1986 and Rev. 1, July 1992.
Extraction Method: 3550 / SW-846, 3rd Edition, September 1986 and Rev. 1, July 1992.

Dry Weight %: 74
Sample Spiked: 603254-11

MS Date Analyzed: 10-APR-96
MSD Date Analyzed: 10-APR-96

MS Date Extracted: 19-MAR-96
MSD Date Extracted: 19-MAR-96

Parameters:	Spike Added	Sample Conc	MS Conc	MS %Rec	MSD Conc	MSD %Rec	RPD	RPD Lmts	Rec Lmts
PHENOL	44	<330	29	65	25	56	15	22	40-103
2-CHLOROPHENOL	44	<330	31	69	28	62	11	27	39-104
1,4-DICHLOROBENZENE	22	<330	16	72	16	70	3	27	43-109
N-NITRO-DI-N-PROPYLAMINE	22	<330	12	54	9	42	25	27	29-117
1,2,4 TRICHLOROBENZENE	22	<330	15	70	15	66	6	21	49-126
4-CHLORO-3-METHYLPHENOL	44	<330	26	58	20	44	27	28	32-117
ACENAPHTHENE	22	<330	16	72	14	64	12	20	47-126
4-NITROPHENOL	44	<1700	20	45	14	32	34	42	1-124
2,4-DINITROTOLUENE	22	<330	15	66	13	56	16	23	43-110
PENTACHLOROPHENOL	44	<1700	27	60	23	52	14	33	14-144
PYRENE	22	<330	15	70	13	58	19	31	52-115
Surrogates:									
NITROBENZENE-D5				62		70			23-120
2-FLUOROBIPHENYL				64		74			30-115
TERPHENYL-D14				70		79			18-137
PHENOL-D6				57		67			24-113
2-FLUOROPHENOL				60		71			25-121
2,4,6-TRIBROMOPHENOL				53		64			19-122

Comments:

Notes:
N/S = NOT SUBMITTED N/A = NOT APPLICABLE D = DILUTED OUT
UG/KG = PARTS PER BILLION. < = LESS THAN REPORTING LIMIT.
* = VALUES OUTSIDE OF QUALITY CONTROL LIMITS.
SOURCES FOR CONTROL LIMITS ARE INTERNAL LABORATORY QUALITY ASSURANCE PROGRAM AND REFERENCED METHOD.

Common notation for Organic reporting

N/S = NOT SUBMITTED
N/A = NOT APPLICABLE
D = DILUTED OUT
UG/L = PARTS PER BILLION.
UG/KG = PARTS PER BILLION.
MG/KG = PARTS PER MILLION.
MG/L = PARTS PER MILLION.
MG/M3 = MILLIGRAMS PER CUBIC METER.
NG = NANOGRAMS.
UG = MICROGRAMS.
PPBV = PARTS PER BILLION/VOLUME.
< = LESS THAN DETECTION LIMIT.
* = VALUES OUTSIDE OF QUALITY CONTROL LIMITS
J = THE REPORTED VALUE IS EITHER LESS THAN THE REPORTING LIMIT BUT GREATER THAN ZERO, OR QUANTITATED AS A TIC; THEREFORE, IT IS ESTIMATED.
JJ = REPORTED VALUE IS ESTIMATED DUE TO MATRIX INTERFERENCE.
ND = NOT DETECTED ABOVE REPORT LIMIT.
RPT LIMIT = REPORTING LIMITS BASED ON METHOD DETECTION LIMIT STUDIES.
RPD = RELATIVE PERCENT DIFFERENCE (OR DEVIATION)

SOURCES FOR CONTROL LIMITS ARE INTERNAL LABORATORY QUALITY ASSURANCE PROGRAM AND REFERENCED METHOD.

ORGANIC SOILS ARE REPORTED ON A DRY WEIGHT BASIS.

DUE TO THE NATURE OF THE SAMPLE MATRIX, MATRIX SPIKE/MATRIX SPIKE DUPLICATE ANALYSIS CANNOT BE PERFORMED FOR AIR ANALYSIS.

CLP SOW 1991, USEPA CONTRACT LABORATORY PROGRAM, STATEMENT OF WORK FOR ORGANICS ANALYSIS, DOCUMENT NUMBER OLM01.8, AUGUST 1991.

LP = LEVERNE PETERSON	RW = RITA WINGO
DWB = DAVID BOWERS	LD = LARRY DILMORE
DB = DENNIS BESON	DC = DAVID CELESTIAL
LL = LANCE LARSON	RB = RAFAEL BARRAZA
JA = JENNIFER ALEXANDER	PL = PAUL LESCHENSKY

H

Notes

APPENDIX H

WELL CONSTRUCTION DIAGRAMS

Applied Engineering & Science

WELL INSTALLATION LOG

PREPARED FOR: CSXT JOB NO.: 4365B

LOCATION: VAUGHN LF/DUKE POWER SITE GREENVILLE SC

DATE 3/11/96	PROJECT GW INVESTIGATION	WELL NO. MW1	SHEET 1
GEOLOGIST D.B	DRILLING METHOD AUGER	CONCRETE PAD ELEV. NA	STICK UP 2'
DRILLER GALE DAVIS	DRILLING CO. GPI	TOC ELEV. 933.91'	STATIC WL 926.79'
WELL CASING: DIAMETER 2"	LENGTH 7'	TYPE PVC	CENTRALIZER NA
WELL SCREEN: DIAMETER 2"	LENGTH 10'	TYPE PVC	SLOT SIZE .020
TYPE OF: DRILLING FLUID NA	FILTER PACK #2 SAND	SEALS BENTONITE	GROUT CEMENT/BENT

DEPTH | WELL SKETCH | SOIL/ROCK DESCRIPTION

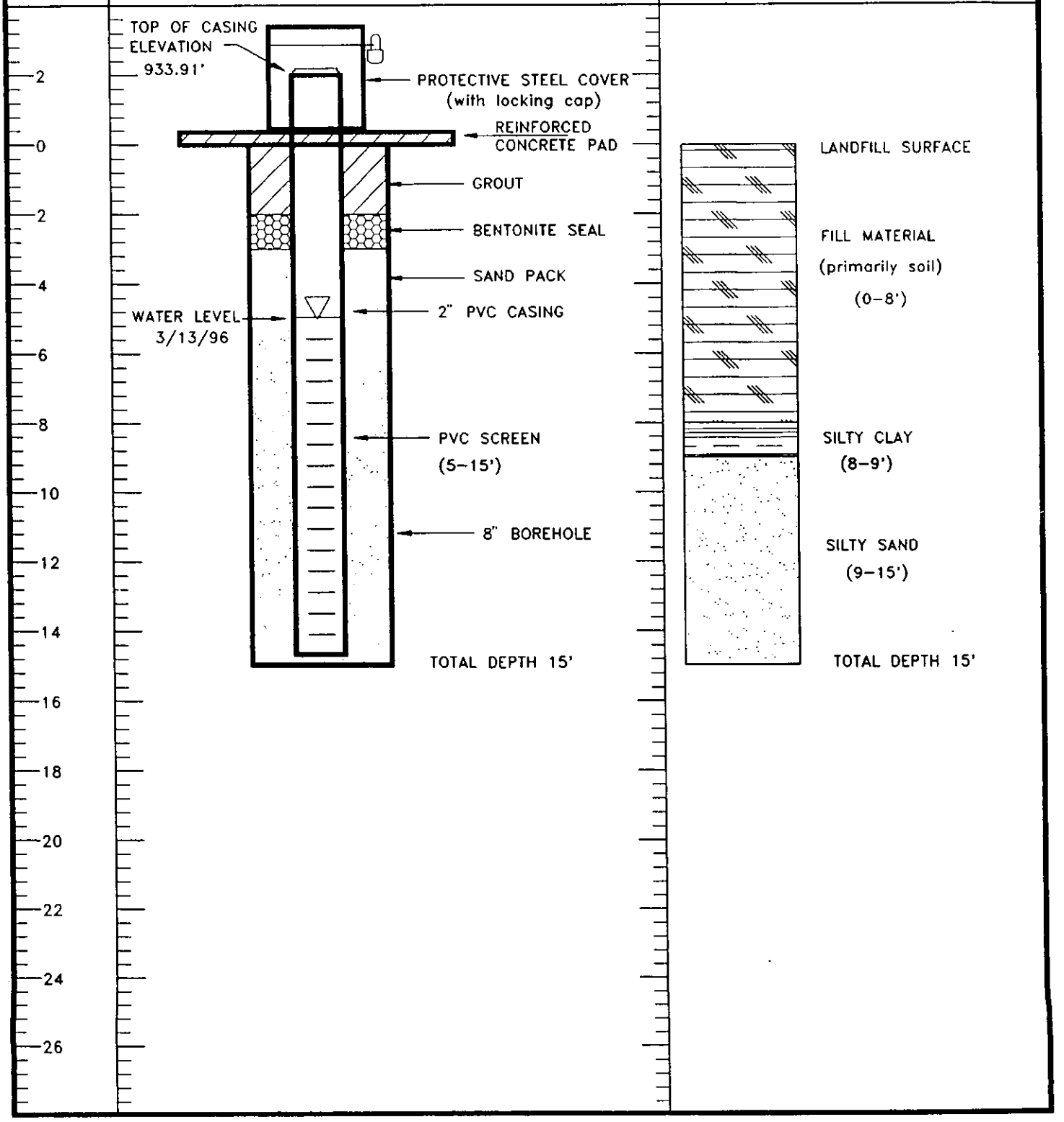

Applied Engineering & Science

WELL INSTALLATION LOG

PREPARED FOR: CSXT JOB NO.: 4365B

LOCATION: VAUGHN LF/DUKE POWER SITE GREENVILLE SC

DATE 3/11/96	PROJECT GW INVESTIGATION	WELL NO. MW2	SHEET 1
GEOLOGIST D.B	DRILLING METHOD AUGER	CONCRETE PAD ELEV. NA	STICK UP 2'
DRILLER GALE DAVIS	DRILLING CO. GPI	TOC ELEV. 934.40	STATIC WL 924.10
WELL CASING: DIAMETER 2"	LENGTH 7'	TYPE PVC	CENTRALIZER NA
WELL SCREEN: DIAMETER 2"	LENGTH 10'	TYPE PVC	SLOT SIZE .020
TYPE OF: DRILLING FLUID NA	FILTER PACK #2 SAND	SEALS BENTONITE	GROUT CEMENT/BENT

DEPTH | WELL SKETCH | SOIL/ROCK DESCRIPTION

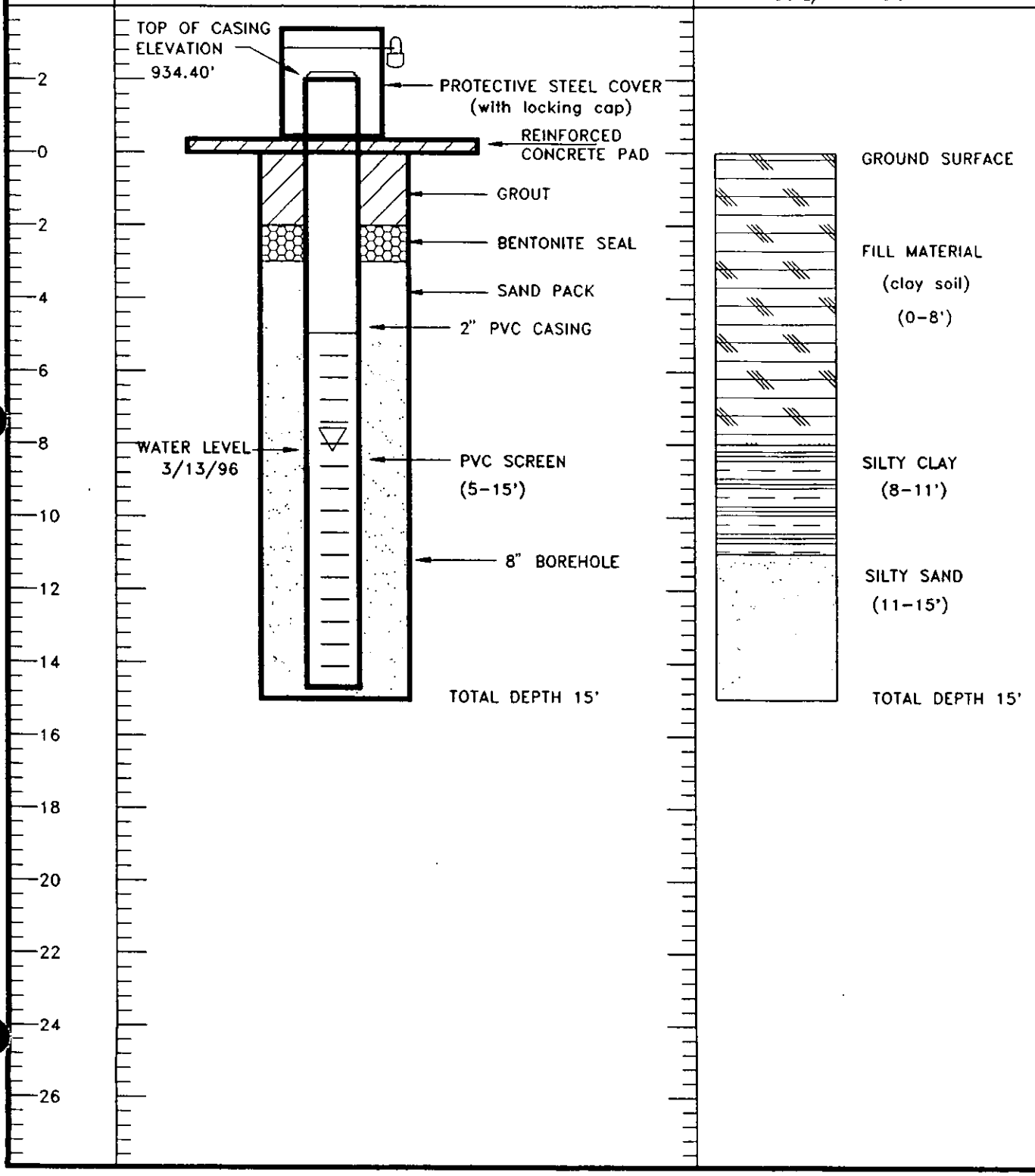

Applied Engineering & Science

WELL INSTALLATION LOG

PREPARED FOR: CSXT JOB NO.: 4365B

LOCATION: VAUGHN LF/DUKE POWER SITE GREENVILLE SC

DATE 3/11/96	PROJECT GW INVESTIGATION	WELL NO. MW3	SHEET 1
GEOLOGIST D.B	DRILLING METHOD AUGER	CONCRETE PAD ELEV. NA	STICK UP 2'
DRILLER GALE DAVIS	DRILLING CO. GPI	TOC ELEV. 935.22	STATIC WL 924.57
WELL CASING: DIAMETER 2"	LENGTH 11'	TYPE PVC	CENTRALIZER NA
WELL SCREEN: DIAMETER 2"	LENGTH 5'	TYPE PVC	SLOT SIZE .020
TYPE OF: DRILLING FLUID NA	FILTER PACK #2 SAND	SEALS BENTONITE	GROUT CEMENT/BENT

DEPTH | WELL SKETCH | SOIL/ROCK DESCRIPTION

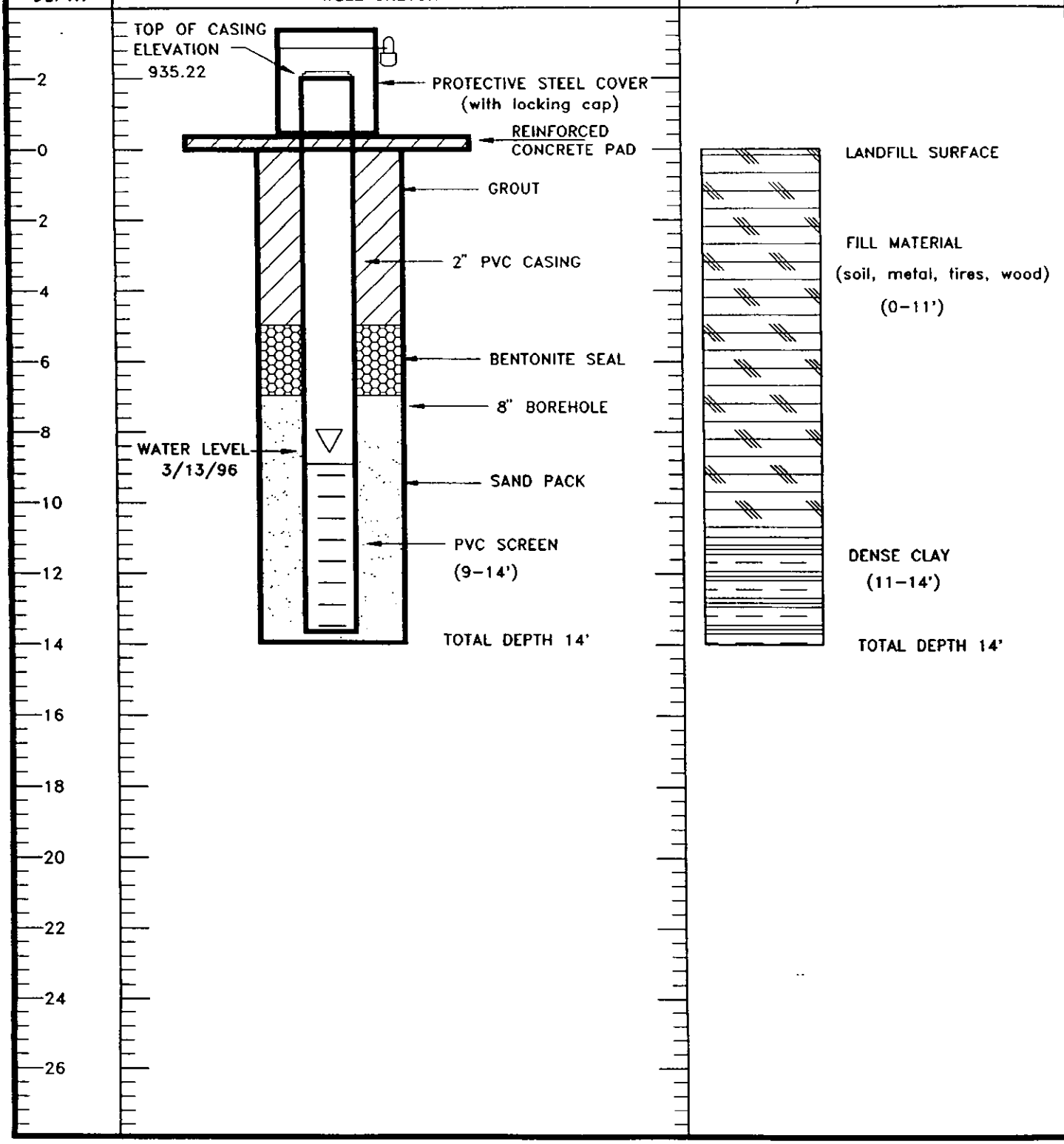

Applied Engineering & Science

WELL INSTALLATION LOG

PREPARED FOR: CSXT JOB NO.: 4365B

LOCATION: VAUGHN LF/DUKE POWER SITE GREENVILLE SC

DATE 3/11/96	PROJECT GW INVESTIGATION	WELL NO. MW3D	SHEET 1
GEOLOGIST D.B	DRILLING METHOD AUGER	CONCRETE PAD ELEV. NA	STICK UP 2'
DRILLER GALE DAVIS	DRILLING CO. GPI	TOC ELEV. 935.04	STATIC WL 924.49
WELL CASING: DIAMETER 2"	LENGTH 17'	TYPE PVC	CENTRALIZER NA
WELL SCREEN: DIAMETER 2"	LENGTH 5'	TYPE PVC	SLOT SIZE .020
TYPE OF: DRILLING FLUID NA	FILTER PACK #2 SAND	SEALS BENTONITE	GROUT CEMENT/BENT

DEPTH | WELL SKETCH | SOIL/ROCK DESCRIPTION

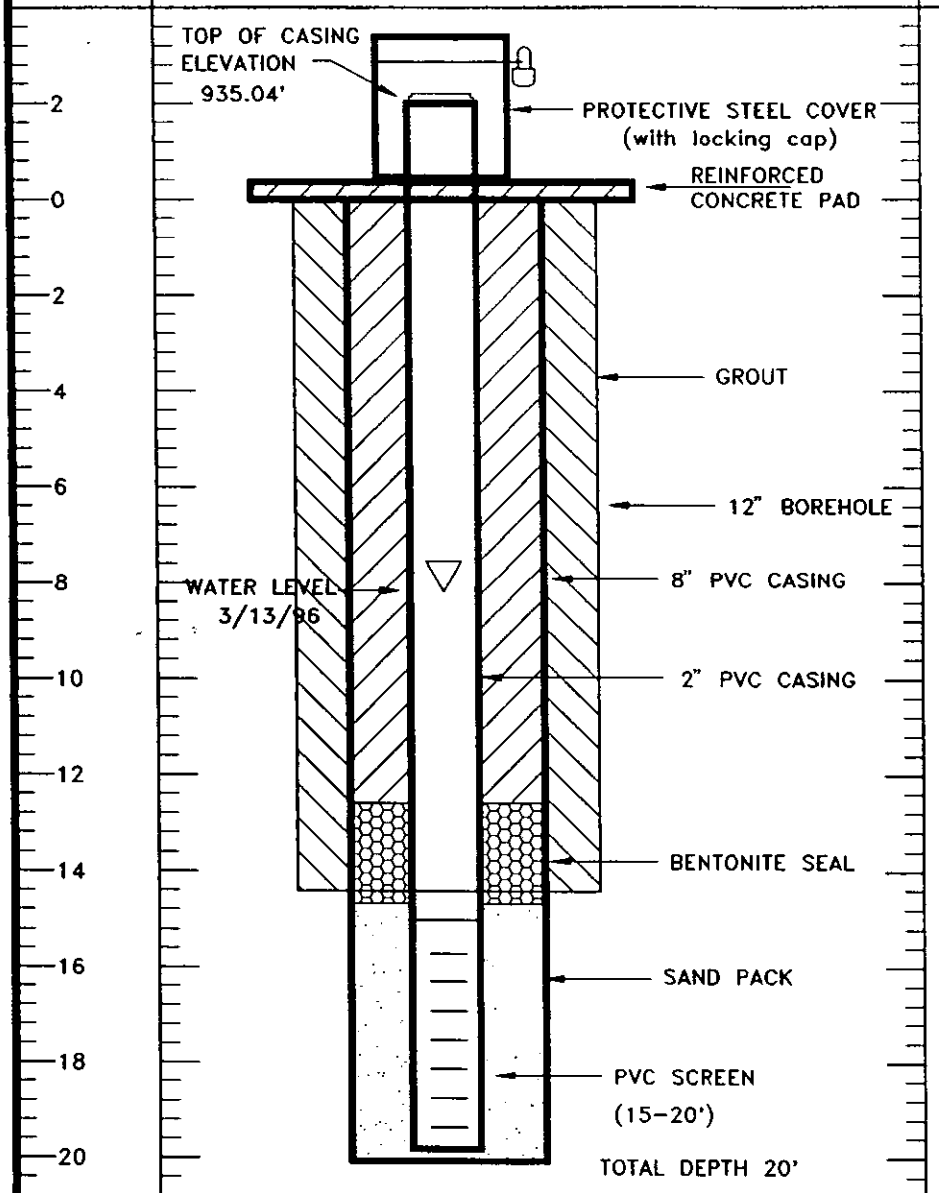

NOTE: 8" OUTER CASING SET FROM SURFACE TO 14.5 FEET TO SEAL UPPER CLAY UNIT FROM LOWER SAND UNIT. BOREHOLE ADVANCED THROUGH 8" CASING TO FINAL DEPTH OF 20 FEET.

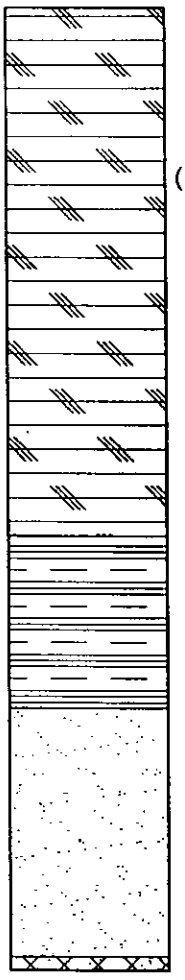

Applied Engineering & Science

WELL INSTALLATION LOG

PREPARED FOR: CSXT JOB NO.: 4365B

LOCATION: VAUGHN LF/DUKE POWER SITE GREENVILLE SC

DATE 3/11/96	PROJECT GW INVESTIGATION	WELL NO. MW4	SHEET 1
GEOLOGIST D.B	DRILLING METHOD HA	CONCRETE PAD ELEV. NA	STICK UP 1.5'
DRILLER DAVE BUTLER	DRILLING CO. GPI	TOC ELEV. 933.91'	STATIC WL 926.79'
WELL CASING: DIAMETER 2"	LENGTH 2'	TYPE PVC	CENTRALIZER NA
WELL SCREEN: DIAMETER 2"	LENGTH 5'	TYPE PVC	SLOT SIZE .020
TYPE OF: DRILLING FLUID NA	FILTER PACK #2 SAND	SEALS BENTONITE	GROUT NA

DEPTH | WELL SKETCH | SOIL/ROCK DESCRIPTION

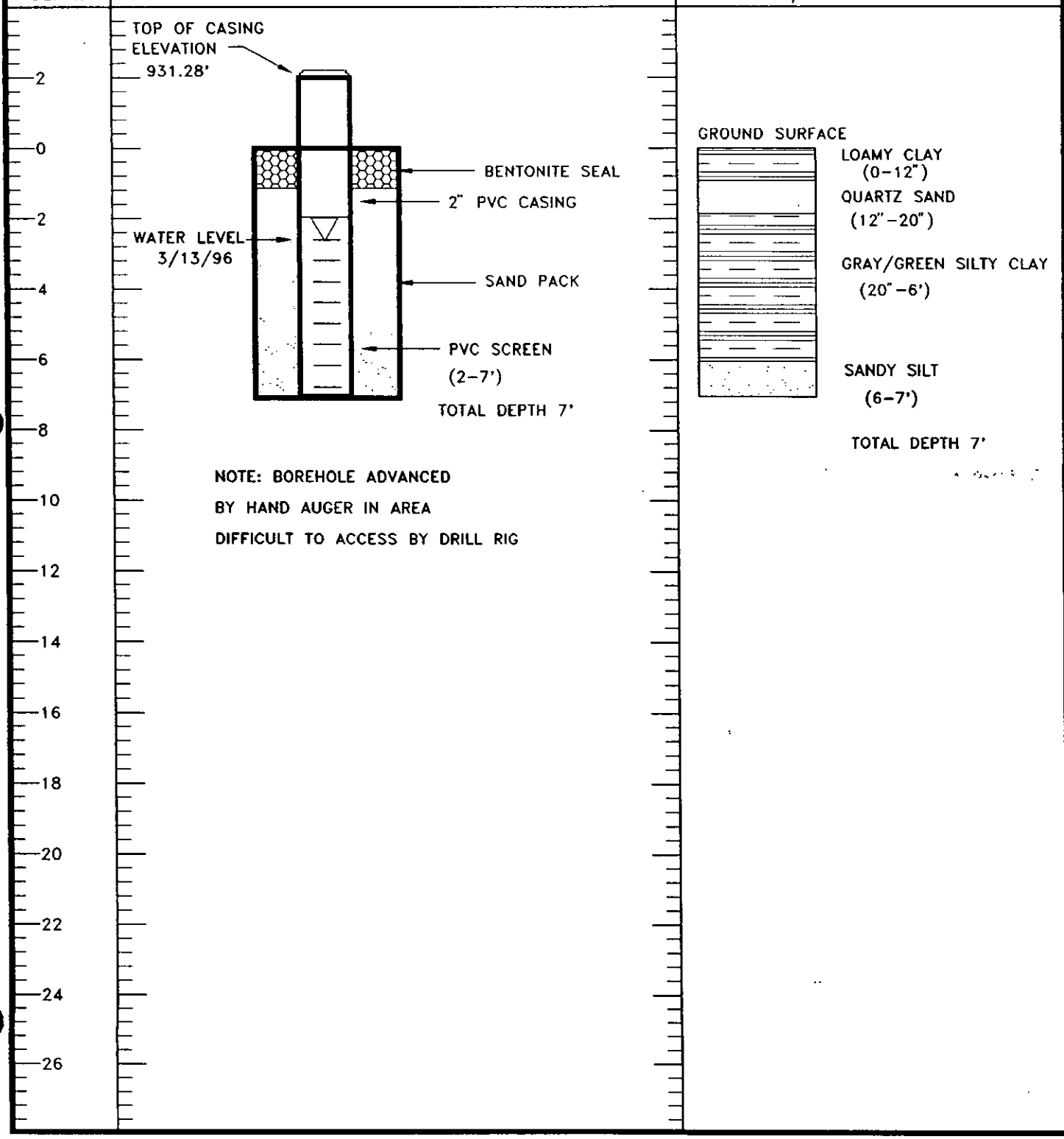

Applied Engineering & Science

WELL INSTALLATION LOG

PREPARED FOR: CSXT JOB NO.: 4365B

LOCATION: VAUGHN LF/DUKE POWER SITE GREENVILLE SC

DATE 3/11/96	PROJECT GW INVESTIGATION	WELL NO. MW5	SHEET 1
GEOLOGIST D.B	DRILLING METHOD AUGER	CONCRETE PAD ELEV. NA	STICK UP 2'
DRILLER GALE DAVIS	DRILLING CO. GPI	TOC ELEV. 930.44	STATIC WL 926.63
WELL CASING: DIAMETER 2"	LENGTH 6'	TYPE PVC	CENTRALIZER NA
WELL SCREEN: DIAMETER 2"	LENGTH 10'	TYPE PVC	SLOT SIZE .020
TYPE OF: DRILLING FLUID NA	FILTER PACK #2 SAND	SEALS BENTONITE	GROUT CEMENT/BENT

DEPTH | WELL SKETCH | SOIL/ROCK DESCRIPTION

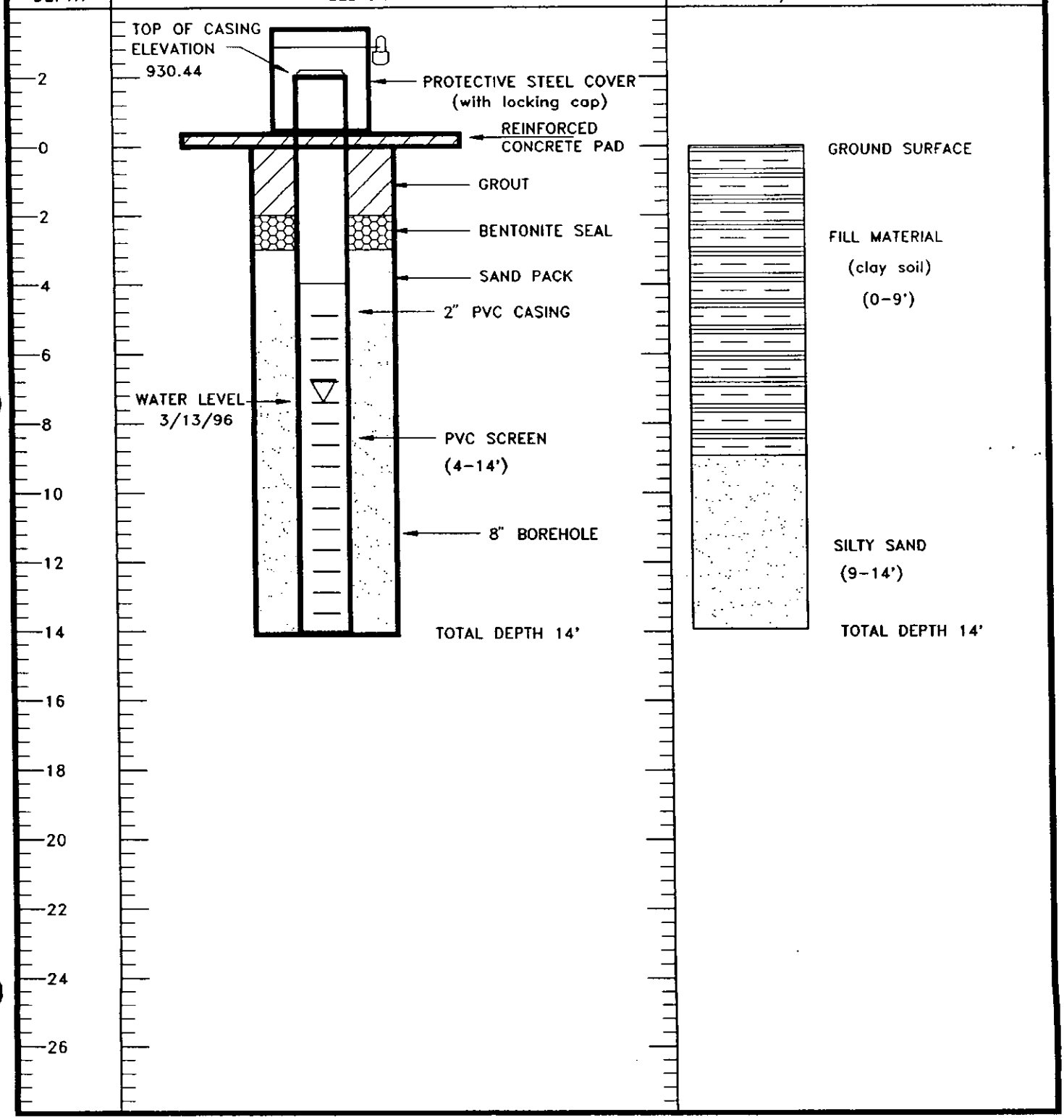

Applied Engineering & Science

WELL INSTALLATION LOG

PREPARED FOR: CSXT JOB NO.: 4365B

LOCATION: VAUGHN LF/DUKE POWER SITE GREENVILLE SC

DATE 3/11/96	PROJECT GW INVESTIGATION	WELL NO. MW6	SHEET 1
GEOLOGIST D.B	DRILLING METHOD AUGER	CONCRETE PAD ELEV. NA	STICK UP 2'
DRILLER GALE DAVIS	DRILLING CO. GPI	TOC ELEV. 933.88	STATIC WL 922.88
WELL CASING: DIAMETER 2"	LENGTH 4'	TYPE PVC	CENTRALIZER NA
WELL SCREEN: DIAMETER 2"	LENGTH 10'	TYPE PVC	SLOT SIZE .020
TYPE OF: DRILLING FLUID NA	FILTER PACK #2 SAND	SEALS BENTONITE	GROUT CEMENT/BENT

DEPTH | WELL SKETCH | SOIL/ROCK DESCRIPTION

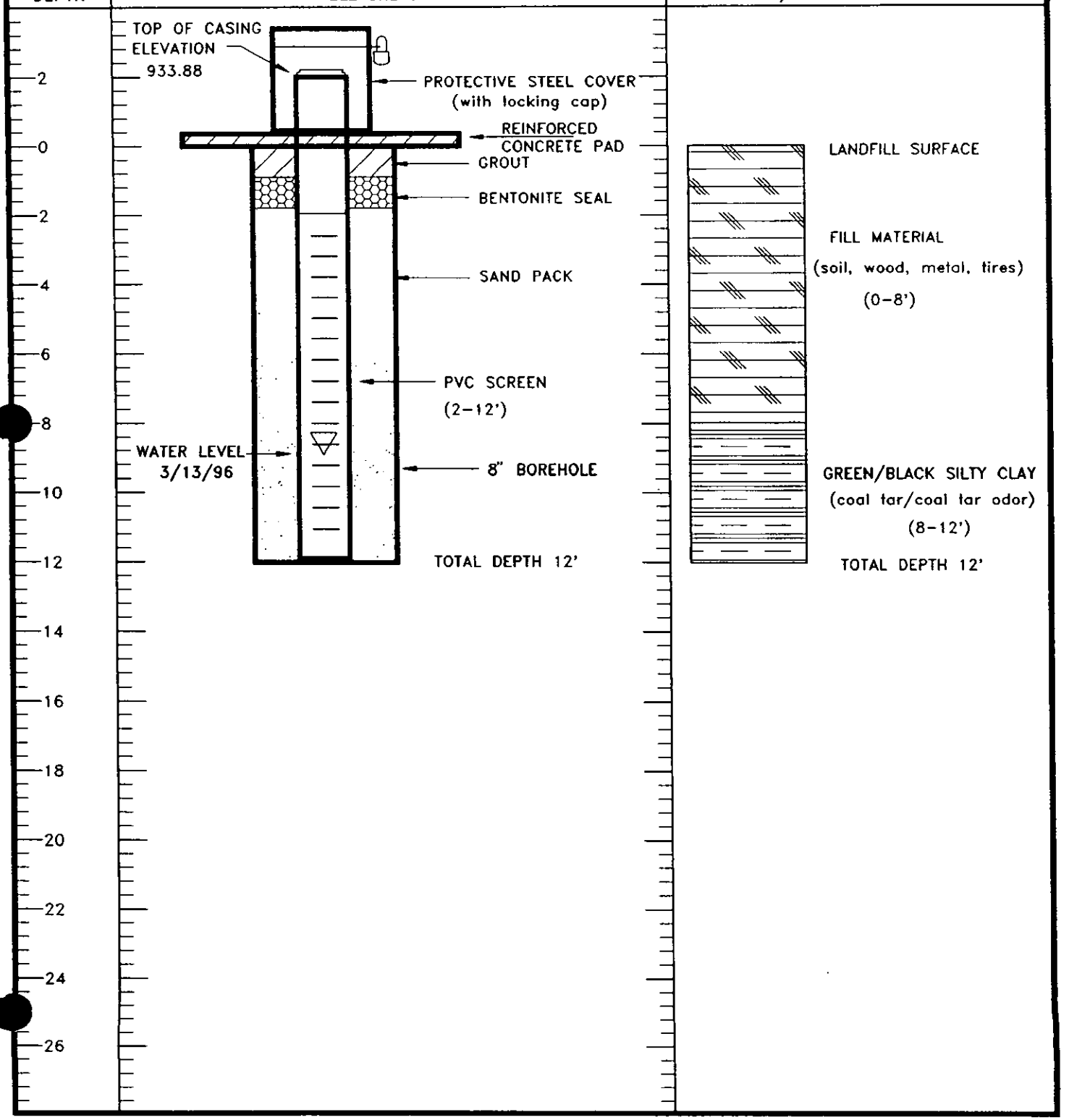

Applied Engineering & Science

WELL INSTALLATION LOG

PREPARED FOR: CSXT JOB NO.: 4365B

LOCATION: VAUGHN LF/DUKE POWER SITE GREENVILLE SC

DATE 3/11/96	PROJECT GW INVESTIGATION	WELL NO. MW7	SHEET 1
GEOLOGIST D.B	DRILLING METHOD AUGER	CONCRETE PAD ELEV. NA	STICK UP 2'
DRILLER GALE DAVIS	DRILLING CO. GPI	TOC ELEV. 935.67	STATIC WL 931.47
WELL CASING: DIAMETER 2"	LENGTH 7'	TYPE PVC	CENTRALIZER NA
WELL SCREEN: DIAMETER 2"	LENGTH 10'	TYPE PVC	SLOT SIZE .020
TYPE OF: DRILLING FLUID NA	FILTER PACK #2 SAND	SEALS BENTONITE	GROUT CEMENT/BENT

DEPTH | WELL SKETCH | SOIL/ROCK DESCRIPTION

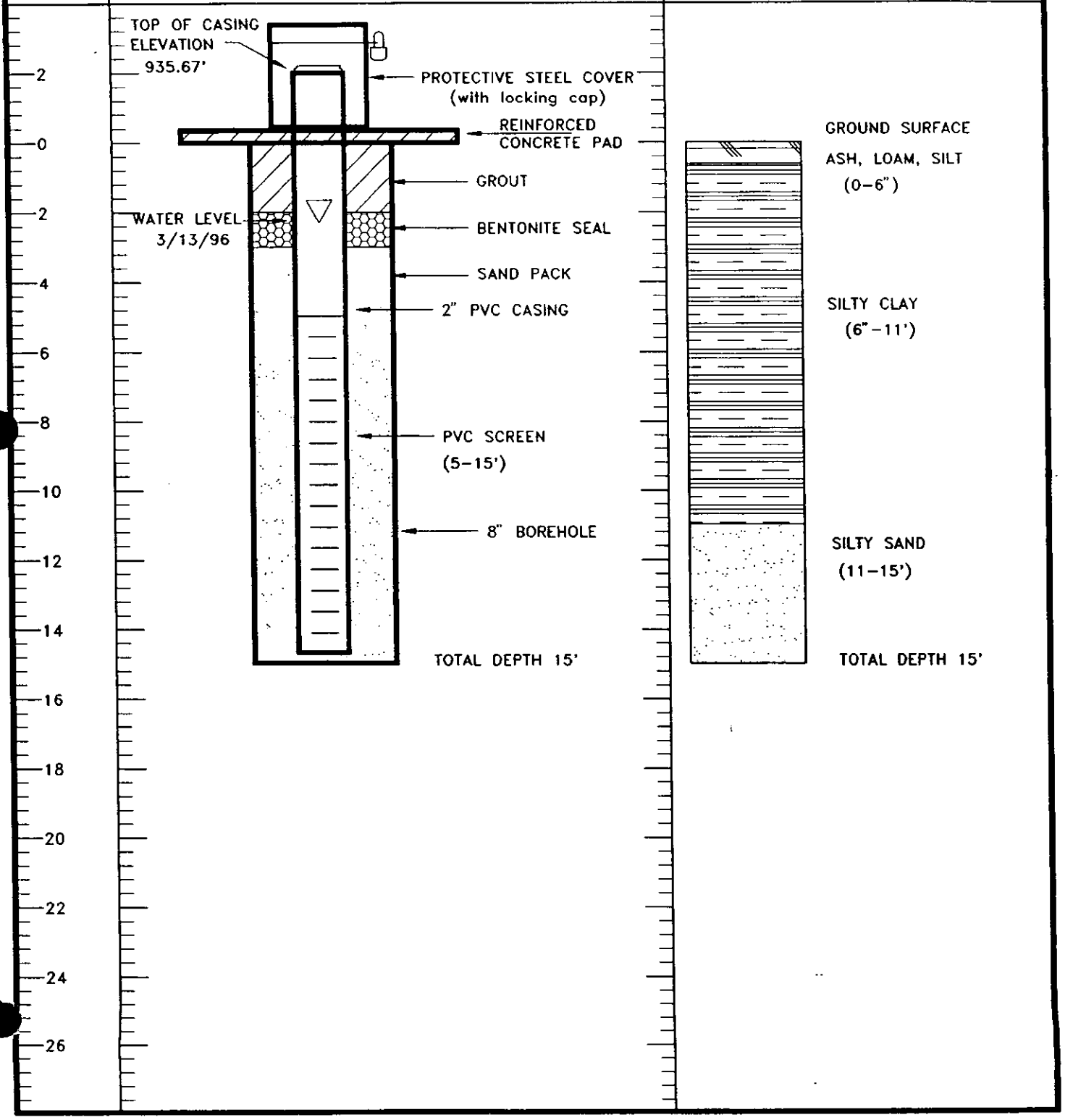

Notes

CSX
VAUGHN LANDFILL
DUKE POWER SITE
GREENVILLE, SC
4365 B

NATIONAL
416
FIELD / TRANSIT BOOK

Property of Applied Engineering and Science

Address 2261 Perimeter Park Dr.
Atlanta, GA 30341

Telephone (770) 454-1810

This Book is manufactured of a High Grade 50% Rag Paper having a Water Resisting Surface, and is sewed with Nylon Waterproof Thread.

INDEX

PHASE II SITE INVESTIGATION
MARCH / APRIL 1996

Monday 3/4/96 Clear 60°

1200 Butler on site
JB Russell (JBR) on site
w/ loader
Richard
Began covering fill material
in back of landfill w/
available soil.
1230 AES off site for lunch
1330 AES on site
Met surveyors (Carolina
Surveying) delineating east
property boundary. Preliminary
survey shows landfill crosses
boundary onto property to
east. Will recheck lines.
1400 Rex Russell (JBR) on
site to discuss heavy equip.
needs for week
Took loader north of Bramlette
to clear path for Geoprobe
along drainage ditch from
Duke Power site
1445. Cut off lock to gate to
Duke Power site to enter

3/4/96
Began clearing brush trees from back of former plant to allow Geoprobe access. Coal tar visible in shallow soil, coal tar odor apparent. Debris from plant including pipes, brick, concrete. Tanker truck rusting on site. Soils bare of vegetation along north central section of property. Appears to drain surface water to back of property.
1600 Off site to buy locks for both gates to Duke Power site
Stopped at CSX office to tell employees of site work.
1700 Off site

NOT USED
DP3

3/5/96
0730 Butler on site
TEG onsite
Danny Patterson
Jason
Butler took photographs of former coal gasification plant
TEG set up on DP 1 to collect continuous soil samples and water sample. Location chosen at suspected rear of former plant

Soil column
0-3' (recovery ~~12~~ 24" DP)
0-6" dark ash, loamy soil
6"-10" brown clay
10"-18" brown gray sandy clay
18"-24" gray silty clay moist
3-6" (recovery 10")
gray silty clay
strong coal tar odor throughout column
Collect DP1 (0840) from gray silty clay 3-6'
Analyses VOC 8260
SVOC 8270

3/5/96
0915 Location DP2
52' S of DP1
50' N of fence

0-3' (recovery 18")
0-12" black ash, loam
12"-3' gray silty sandy clay
faint odor in black material
no odor in clay

DP3 (0940)
50' E of DP2
50' N of fence
0-3' (recovery 18")
gray brown silty sand, some black coal specks, no odor

Richard (JBS) on site. Begins clearing brush trees from DP site to allow Geoprobe access

3/5/96
DP4 (0950) 50' N of DP3
50' E of DP1

0-3' (14" recovery)
silty sandy loam
silty sandy clay; strong coal tar odor

3-6' (32" recovery)
silty sandy clay gray
dark shiny coal tar in silty clay ≈ 5' [PHOTO]
yellowish silty clay ≈ 6'

6-9' (36" recovery)

moist gray silty clay, strong coal tar odor; sheen

9-12' (6" recovery)
water @ ≈ 12'
saprolite; muscovite mica
weathered feldspar
strong odor

3/5/96

DP5 25' East of DP4
(1100) 100' N of fence

0-4' loose concrete near surface
(recovery 22')
tan silty clay w/ black specks
coal tars, strong coal tar odor

DP6 (1125) 25' East of DP5
100' N of fence
0-3' (recovery 16")
dark silty clay w/ black coal
fragments; moderate coal tar
odor; greenish brown silty
clay 2-3' slight odor

1140 AES and TEG off site
for lunch
1245 Back on site.
Laura Morrisson (AES) on site

DP7 (1330) 25' East of DP6
100' N of fence

3/5/96
DP7 0-3' (recovery 30")
0-18" dark ash loam, coal
tar odor slight
18"-3' brown silty clay, no odor

DP8 (1340) 25' S of DP6
75 N of fence

0-3' (16" recovery)
coal tar dripping from shoe
gray/black silty loam
strong coal tar odor

DP1 [1415] collected 2 40ml
VOA using

DP9 1425 25' S of DP8
50' E of DP3

0-3' (28" recovery)
0-6" dark silty loam
6"-10" red brick
10"-18" black silt (coal tar odor)
18-24" tan material (possible fire brick)
24"- reddish brown silty clay no odor

3/5/96

DP10 (1445) 30' N of DP6
at edge of concrete foundation

0-3' (26" recovery)
gray brown silty clay moderate odor
brown black silty clay strong odor

3-6' (36" recovery)
36-42" gray / black silty clay strong odor
42"-72" green / gray silty clay
moderate coal tar odor

DP11 (1530) 50' W of DP2
50' N of fence

0-3' (30" recovery)

black ash, loam no odor
gray brown clay no odor

3/5/96

DP12 50' W of DP1
50' N of DP11

0-3' (20" recovery)
red brick } fill
black ash, loam } material

3-6' (4" recovery)
brick, yellow silty clay
black ash, loam faint odor

6-9' black ash brick fragments
gray silty clay moderate
coal tar odor, water @ 7'

DP13 50' N of DP1
0-3' (22" recovery)
black loam, roots
black ash, slag no odor
3-6' (30" recovery)
gray silty clay; coal tar
in interstices ≈ 5-6'
strong coal tar odor; water
≈ 6'

1730 AES, TEG off site

Wednesday 3/6/96 heavy rain
0700 Called TEG to cancel operation for today. Weather expected to be bad for next two days. Will reschedule for next week.
0900 Butler and Morrison on site. Will attempt to trace surface flow across site and possible contaminant pathways.

0930 Walked DP site
inflow from East gate onto site flows west northwest and ponds in north center of site. Over 2 feet deep in center (Photos, drawing)
No other inflow observed. Surface flow from precipitation at southeast corner flows west and exits at south gate or ponds in southwest central area. No other outflow observed. Ponding due to buildup of debris along west fence

3/6/95
1000 Walked along fence west of DP site. No outflow of water observed from site except in southwest corner. Minor flow from surface runoff from precipitation falling in that area.
Ditch west of DP site appears to be fed from direct precipitation, surface flow from the fill material to the north, and possible discharge of GW. No flow pathway observed for ditch water to be carried from north of Bramlette across to south of Bramlette.

1030 Butler and Morrison searched south of landfill for ditch visible in historic aerial photographs. Ditch is man made structure extending from southwest corner of landfill south to Willard St where it turns 90° to west, flows under rail lines and into Reedy River. Main drainage pathway

3/6/96
for floodplain surrounding landfill. Water level in ditch following heavy rains this morning is at @ 3'.
No other outflow for floodplain observed.
1145 AES offsite
1630 Return to Atlanta

NOT USED
DB

3/11/96 Clear 28°
0730 Butler on site
0810 GW Protection (GWP) on site
Gale Davis
Johnathan Do
Reviewed work plan, health and safety plan and CSX RR safety procedures.
Set up decon area on landfill.
Filled water tank from hose behind CSX office

0900 Set up on MW-7 at former DP site adjacent to DP1.
Collect, split spoon sample at 5-7'
Sample DP1A collected from split spoon at 0950
VOC + SVOC
1015 JBR on site, loader and dump truck. Will resume spreading available fill at LF.
1030 Curt Bennet (GWP) on site. Licensed in SC

3/11/96 MW-7

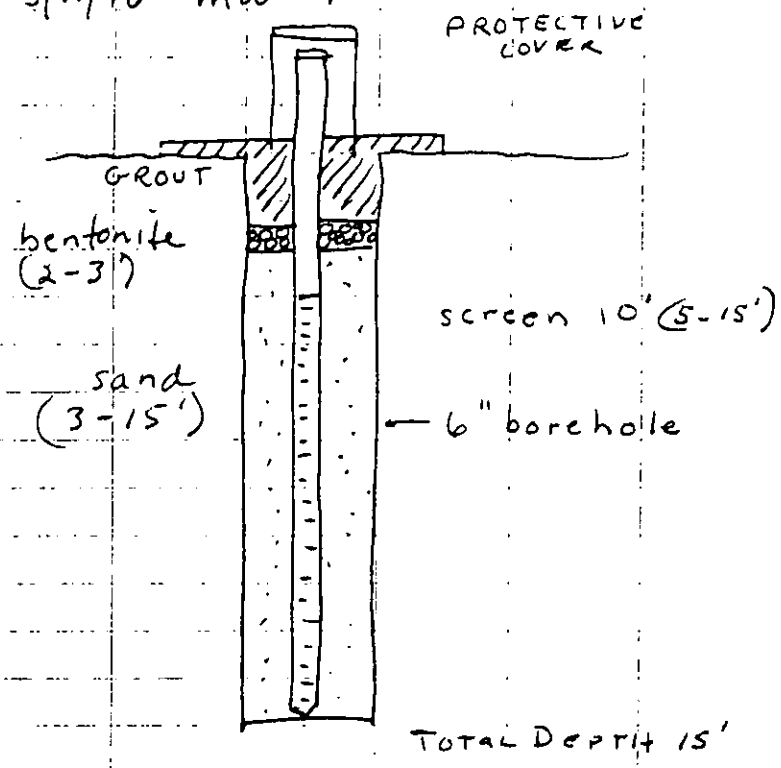

3/11/96
1100 Set up on MW-1 at NE corner of LF.
Auger through fill to native soil 8' begin split spoon sampling
8-10' silty clay 8-8.5'
10-12' 1' recovery silty sand micaceous sand, strong coal tar odor.
Drill to 15' set well

MW-1

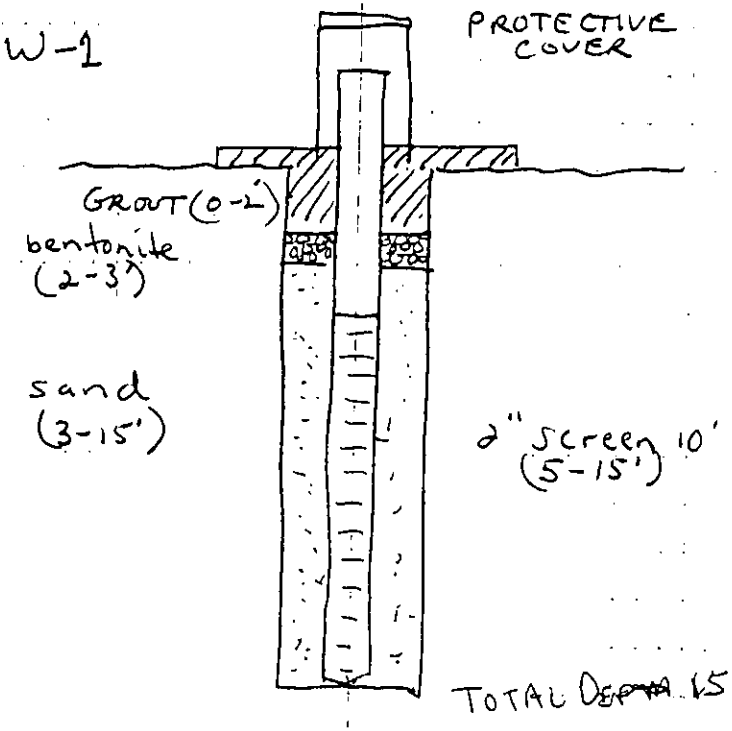

3/11/96
1330 Break for lunch.
1430 Back on site
Set up on MW3D adjacent to LF25. Auger with 14' through fill material. At 8' auger slows. No advancement. Withdraw augers. Tire wrapped around bit. Dirt and debris clogging auger. Clean out and resume augering to 10'
Split spoon samples
10-12' (6" recovery) fill and native clay; strong coal tar odor and visible tars
12-14' (14" recovery) native clay; greenish gray w/ tars
14-16' (6" recovery) dark mica rich sand; strong coal tar odor.

Seal broken on rig: leaking hydraulic fluid.

3/11/96
JBR dump truck broke fuel line
1700 JBR off site. Will return tomorrow and bring 20 loads clean fill to cover remainder of fill.

MW 3D

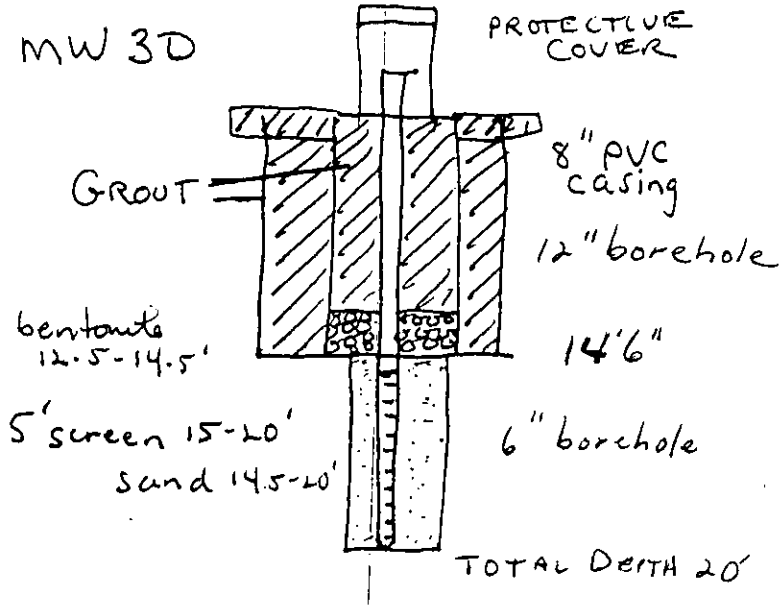

3/11/96
1930 GWP deconning augers and other equipment.
1815 AES + GWP off site

NOT USED
DB

3/12/96 Clear 45°
0730 AES + GWP on site
Dave Butler / AES
Curt Benson
Gale Davis
Johnathan Smith
Shane
GWP completing decon of augers
Begin development of MW-7
Butler notified CSX office of intentions to drill MW 5 along tracks
0845 JBR on site. Expecting clean soil fill to arrive after 9:00. Will continue spreading fill at back of landfill
0945 GWP set up on MW-5 along RR tracks SW of LF
MW-5
Auger to 5' split spoon to determine stratigraphy
5-7' (12" recovery) fill / loamy clay
7-9' (20" recovery) loamy clay no odor
9-11' (5" recovery) quartz mica sand, no odor, wet

3/12/96
1030 Rig dripping hydraulic fluid.

MW5

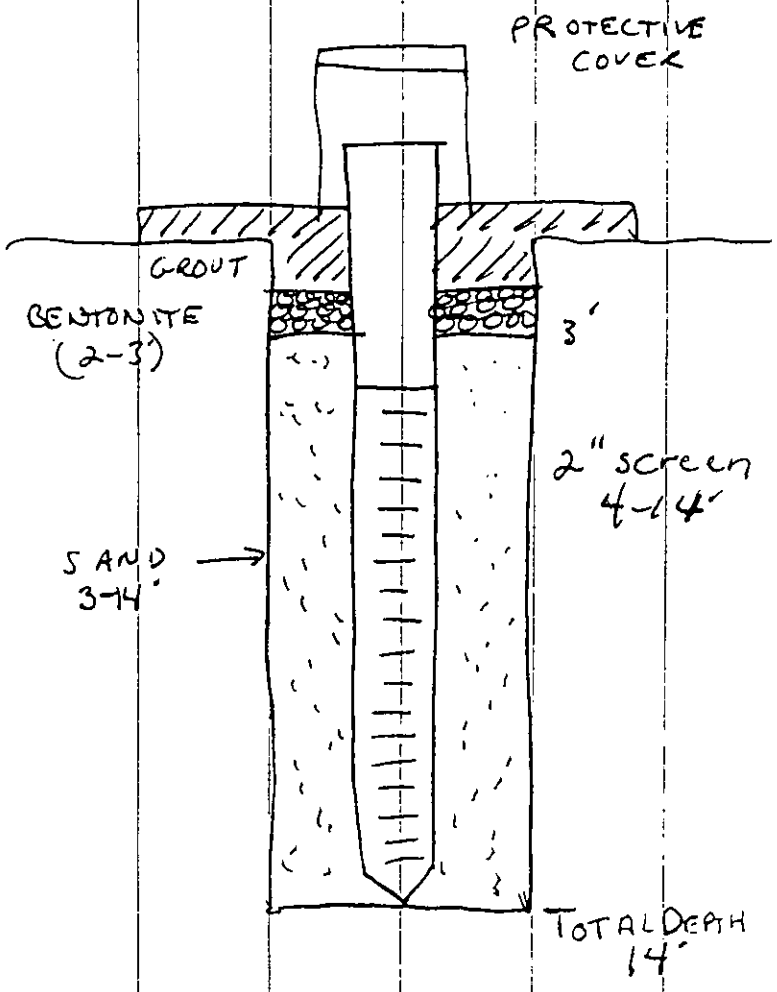

3/12/96
1015 Second GWP crew on site will set up on MW3D using mud rotary to advance to 30' w/ continuous splitspoon sampling.

Drilling mud Super gel-X super high yield

Split Spoons
16-18' (12" recovery) 3" zone dark coal tar; discolored silty sand. Saprolite below mica, garnet gneiss
18-20' (20" recovery) silty sand (oil saturated) followed by schistose saprolite; slightly moist. Appears that tar follows sand and flows above saprolite
Drill out to 20'
Set 5' screen from 15-20'
SAND 20-14.5'
bentonite 12.5-14.5'

3/12/96
WELL DEVELOPMENT

MW-7 1 hour 50 gallons
by whale pump.
MW-1 1 hr 55 min 55 gallons
by whale pump
MW-3D 1 hour 55 gallons
by whale pump
MW-3 1 hour 55 gallons
by whale pump
MW-5 1 hr 15 min 40 gallons
by whale pump
MW-2 1 HR 30 gallons
by whale pump
MW-6 25 min 30 gallons
by whale pump
MW-4

3/12/96
1200 GPW Set up on MW3
Drill to 14' clay below fill
set 5' screen from 14-9'

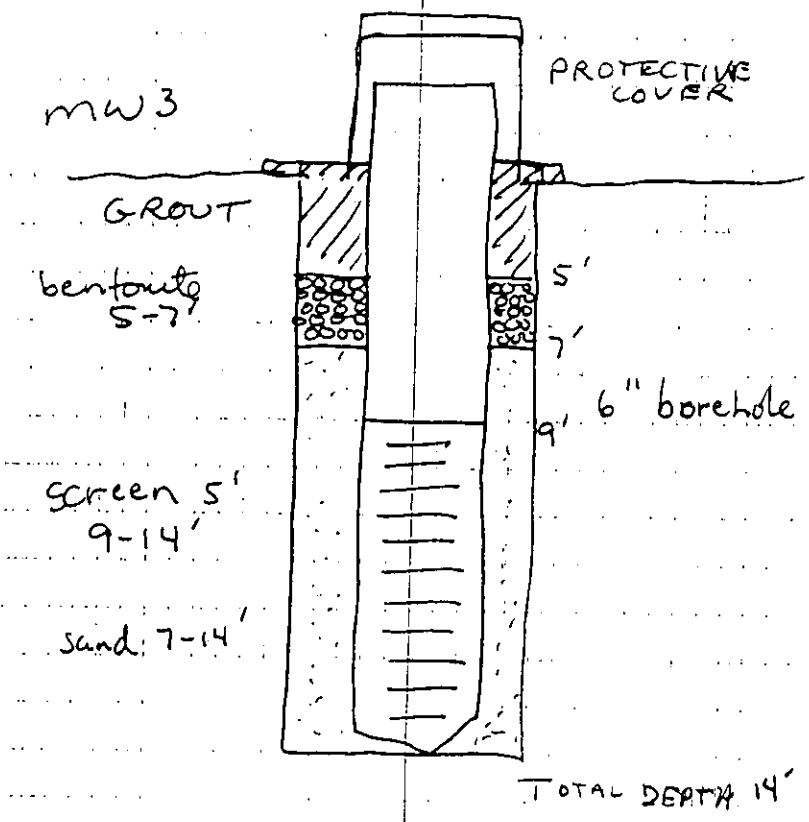

3/12/96
1200 Break for lunch
1315 Back on site
GWP finishing MW 3 to 14
set 5' screen 9-14'
GWP constructing pads on
MW-1, MW-7 and MW-5

1330 GWP set up on MW 2
Auger to 5
Split spoons
5-7' (no recovery)
7-9' (24" recovery) red
silty clay fill / gray green
silty clay, no odor
9-11' gray green silty clay
no odor
11-13' (20" recovery) silty
clay to 11'. Clean silty sand
wet, no odor, no visible
tars.

3/12/96

MW-2

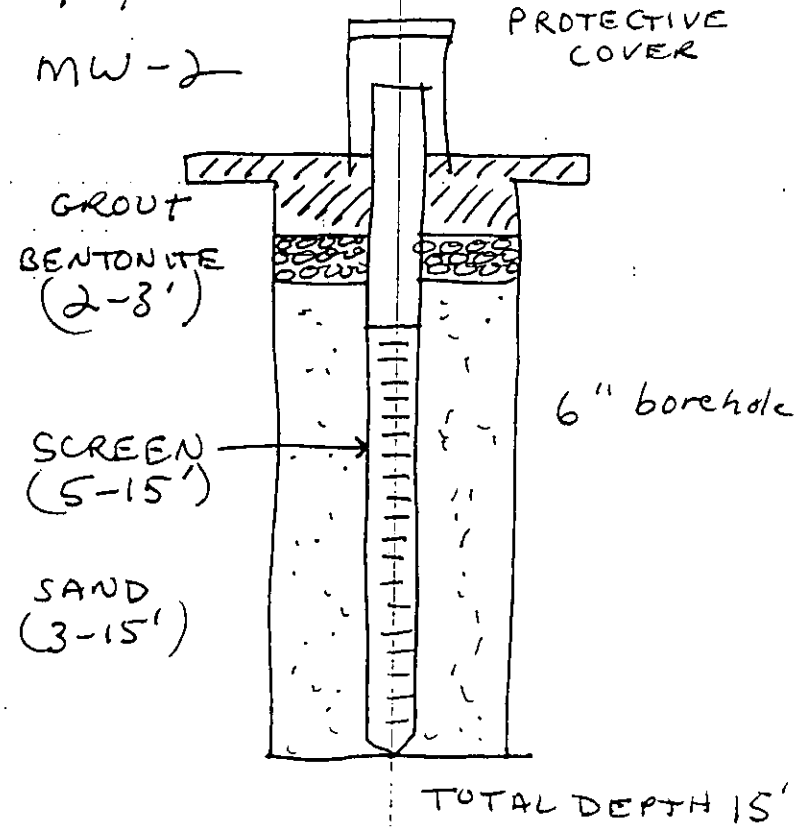

3/12/96
MW-4 1515 Advanced mw-4 to 7 feet by hand auger in the floodplain.

0-12" loamy clay no odor
12"-20" quartz sand no odor
20"-6' gray green silty clay
6-7' gray sandy silt no odor
water in hole within 6" of surface.
Set 5' 2" PVC screen from 2-7' sand pack to 6". Bentonite seal at surface

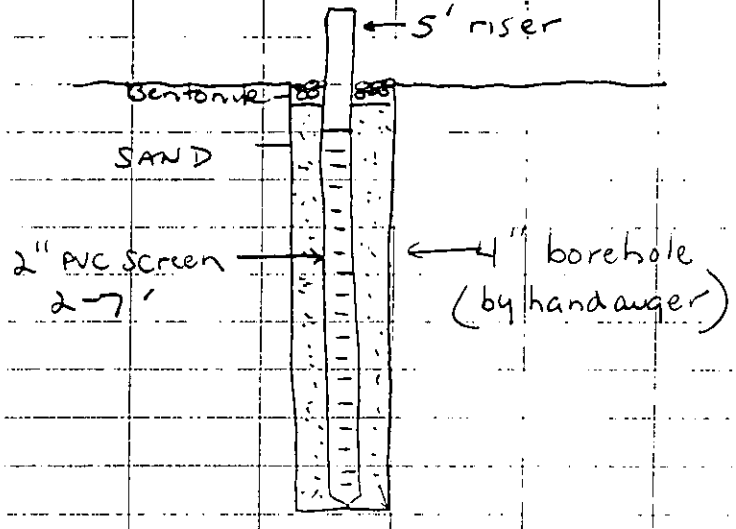

3/12/96
MW-6 1600 Auger through fill material 8'.
Split spoons:
8-10' fill / green black clay coal tars, strong odor
10-12' green black clay coal tars, odor
Auger to 12'

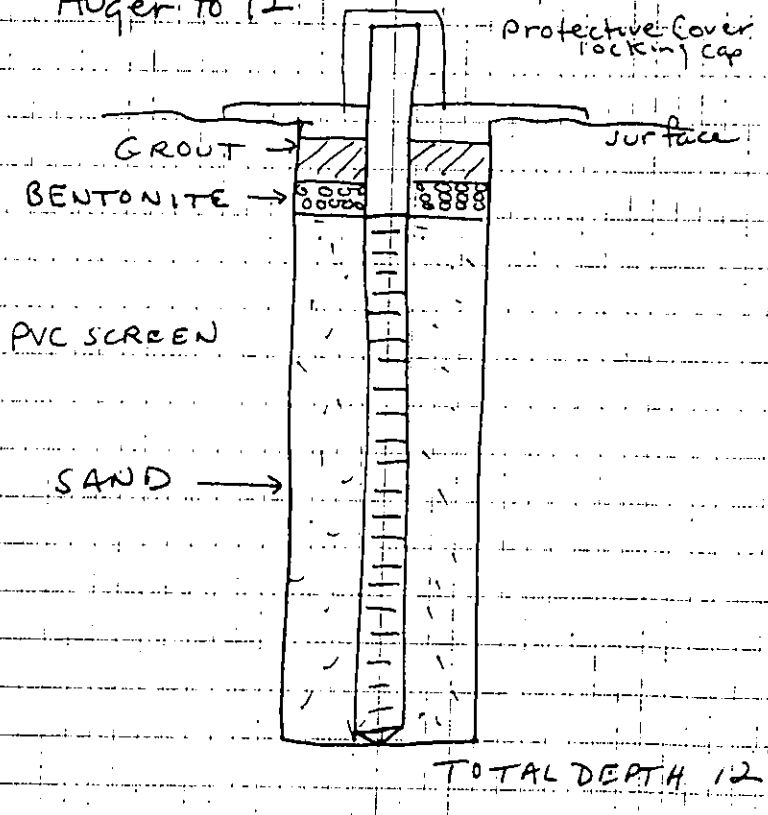

3/12/96
1730 GWP deconning equipment; finishing pad at MW6 and developing MW6
Well labels put on all protective casings.
1900 AES, GWP off site

NOT USED
DB

3/13/96 0715 Clear 30°
AES on site; check water level in MW7.
0800 TEG on site
Dan Patterson
Dan Windham

MW-7 [0815] collect water sample; no free product ~~noted~~ noted at water surface or tars in bottom of well.

Sp. Cond = 0.67 mS/cm
T = 10.8 °C
pH = 6.5
Analysis VOC, SVOC

3/13/96

WATER LEVELS

MW1	[1510]	7.12'	BTOC
MW2	[1700]	10.3'	"
MW3	[1425]	10.65'	"
MW3D	[1450]	10.55'	"
MW4	[1550]	4.65'	"
MW5	[1720]	9.48'	"
MW6	[1615]	11.0'	"
MW7	[0730]	4.20'	btoc

3/13/96

TEG set up on DP14 SE corner
50' W of fence
75' N of fence

0-3' (26" recovery)
coarse gravel at surface followed by coal fragments, red clay; greenish brown clay to 3' slight odor. Collect sample for lab analysis

DP14 [0900] VOC SVOC

DP15 [0920] 100' N of DP14
50' W of fence

0-3' (36" recovery)
greenish brown clay, red mottling; no odor

DP16 (0935) 50' N of DP15
25' W of fence

This area of property clear of vegetation, coal tar visible in surface soils; strong odor
0-3' (36" recovery) reddish brown mottled clay slight odor

3/13/96
JBR breaks hydraulic line on loader; leaks into soil; will drum soil. Will have to take loader for repairs.

DP 17 [0955]
50' N of DP 16
25' W of fence

0-3' (30" recovery)
0-6" red brown clay
6"-20" black loam, ash, tars
20"-30" gray brown clay moderate coal tar odor throughout column.

DP 18 NW corner [1020]
175' S of fence
50' E of fence
0-3' (26" recovery)
0-6" reddish sandy silt fill
6"-26" black gritty coal fragments no odor, no visible tar
DP18 for lab analysis
VOC, SVOC from soil 4-6'

3-6' (24" recovery)
black coal fragments
greenish brown silty clay (native) from ≈ 4-6' no odor

DP19 50' N of DP 13
0-3' (14" recovery)
black coal ash, coal tar, greenish clay, strong odor

1115 TEG off site for lunch
1130 Gordon Brown, former coal gasification plant manager on site. Pointed out details of former operations. Area at north central portion of site w/ extreme coal tar contamination had overhead rail line where coke was loaded for shipment. Said UST existed which held fuel oil to heat plant near south side of property.
1150 Charles Bristow on site DHEC discussed progress.

3/13/96
1215 TEG back on site.
1240 Bristow off site
1300 Set up on NB 1
NB = North of Bramlette
but off Duke Power site.

NB1 [1305] 8' W of fence
≈ 60' N of ditch

Push through fill to 6'
6-9' (12" recovery)
red clay fill, black
coal fragments; no odor
9-12' (36" recovery)
gray silty sandy clay, slight
coal tar odor
→ Sample NB1 VOC, SVOC
NB2 [1410] West of NB1
≈ 10' N from edge of ditch
0-3' (6" recovery) red
clay fill / concrete.
3-6' no recovery
6-9' no recovery
9-12' no recovery
12-14' (12" recovery) quartz sands
wet no odor in soil or water

3/13/96
1415 JBR back on site with
loader. Will clear north end
of landfill and cover debris
w/ soil

[1540] NB3 W of SW corner
of Duke Power site 6' W of fence
10' S of ditch
NB3
0-3' (12" recovery) dark
loamy silty clay, slight coal
tar odor
NB4 25' S of NB3 Coal tar
1600 TEG off site
JBR clearing access to sampling
locations at Duke Power site.
Laura Morrison collecting water
samples from monitoring wells

MW-3 [1425] 1.5' free product in
well
Cond = 1.86 mS/cm
T = 17.3°C
pH = 6.5
sample VOC, SVOC, sulfate

3/13/96

MW-3D [1450] WL 10.55' BTOC
Cond = 0.55 mS/cm
T = 22.1 °C
pH = 6.5
distinct coal tar odor but no free product.
Analysis VOC, SVOC, sulfate

MW-1 [1520] WL 7.12' BTOC
COND = 0.41 mS/cm
T = 18.5°C
pH = 6.0
Analysis; VOC, SVOC, sulfate

MW-4 [1550] WL 4.65'
Cond = 0.19
T = 15.4°C
pH = 6.5
bailed dry for development; 8 bailers
Analysis; VOC, SVOC

NOT USED
DB

3/13/96

MW-6 [1615] WL 11.0'
COND = 0.84 mS/cm
T = 16.9°C
pH = 6.5
product in well
Analysis; VOC, SVOC, sulfate

MW-2 [1700] WL 10.3'
COND = 0.41 mS/cm
T = 13.3°C
pH = 6.0

MW-5 [1720] WL 10.3'
COND = 0.17 mS/cm
T = 14.0°C
pH = 6.0

1735 Pack samples for shipment
1830 AES off site
1915 Drop samples at FEDEX office on Pelham Rd
Airbill # 5822882564

3/14/96 Clear 55°
0800 AES on site (Butler, Morrison)
TEG on site (Patterson, Windham)
Morrison to collect samples from ditch west of DP site

TEG set up on DP 20 in NW corner of site
DP 20
0-3' (32" recovery)
0-1' red brown clay fill
1-2' black coal ash, fragments
2-32" brown silty clay; coal tar odor

DP21 50' S of fence
50' W of DP 20
39' S of DP 23
0-3' (22" recovery)
brown silty clay fill
black coke, coal fragments
slight odor.
3-6' (28" recovery)
black coke, coal fragments
gray silty clay; some coal tar in interstices, slight odor

3/14/96
DP 22 25' S of fence
57' E of DP 23
0-3.5' (16" recovery)
silty clay fill, slight odor
3.5-7' (26" recovery)
silty clay (mica rich) fill (slight odor)
gray green silty clay at 6' w/ coal tar, strong odor
7-10' (10" recovery; wet)
gray green silty clay w/ tar strong odor, assume ground water contaminated.

DP23 14' S of fence
57' W of DP 22
39' N of DP 21
165' E of west fence
0-3' (16" recovery)
brown silty clay fill
black coke, coal fragments
slight odor
3-6' (no recovery; wet)
6-9' (no recovery, wet)
9-14' (12" recovery, wet)
sandy silt; sand slight odor
no visible tar

3/14/96
DP 24 68' S of DP 21
60' W of DP 20
0-3' (18" recovery)
clay fill
black coke, coal fragments
coal tar, strong odor

DP 25 in NE corner of property
7' W of fence
0-3' (30" recovery)
brown - black loam
brown silty clay no odor
gray silty clay no odor

Tanker body in DP site
Identification faint
" A.P.C.
No. 88(?)
much of tanker coated w/ tar
Open port; inside has brick
other debris; no liquid visible

1200 AES off site for lunch
TEG off site
1330 AES on site
Spoke w/ Dixie Metals on

3/14/96
W. Washington St. about taking steel girders from landfill. Will accept steel if we can move it there.

Salvage yard cannot take tanker truck

Sample DP16 field characterized using ENSYS PAH kit Results < 1ppm will send to lab for verification Analysis VOC, SVOC

REEDY 1 [1440] surface water sample collected from the Reedy River north of the Bramlette Road bridge [PHOTO] to be used as background sample. VOC SVOC

REEDY 2 [1500] surface water sample collected from the Reedy River north of the Willard Street bridge and downstream of the outlet which carries surface flow from the floodplain / landfill under the RR tracks and into the river. [PHOTO] Analysis VOC, SVOC

3/14/96
1515 Surface flow in ditch along Willard Street flows west ~~and enters~~ as, turns north, and enters ditch from floodplain) landfill [PHOTO] which then enters Reedy River. Sheen observed in ditch flow along Willard St. this day.

WD1 [1520] collected surface water sample from ditch which flows along Willard and into ditch from floodplain. Sampling point in ditch ≈ 15' before entering Floodplain ditch (Diagram right →)
Analysis VOC, SVOC
WD = Willard Ditch

FD1 [1530] FD = Floodplain Ditch collected surface water sample from floodplain ditch before it joins with Willard Ditch (Diagram →)
Analysis VOC, SVOC

3/14/96

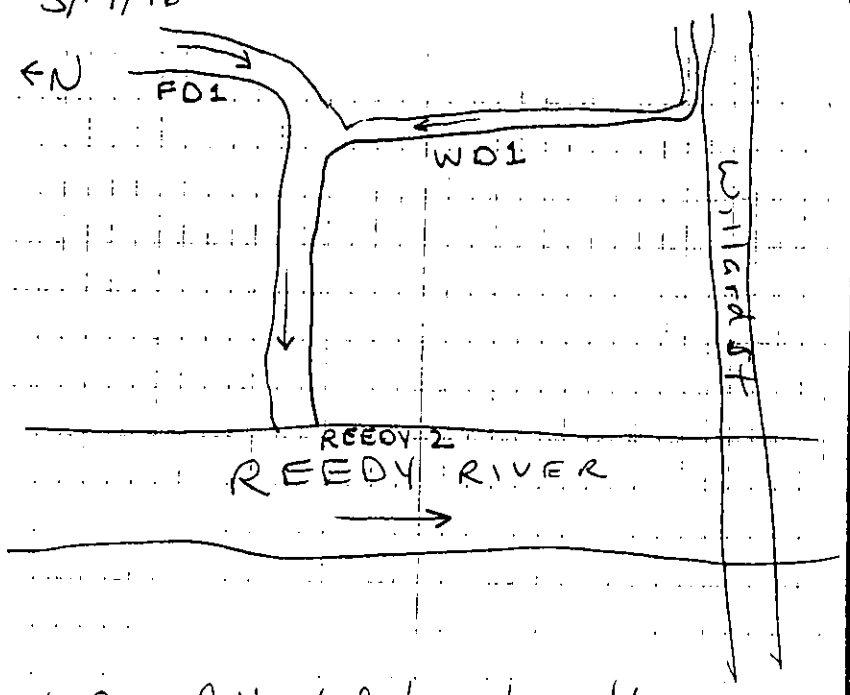

1600. Attached locks to wells labeled all drums.

Bagwell fence on site repairing fence: 1615 Off site

1620 JBR Richard on site; will run loader till 5:00 to clear landfill surface.

3/14/96
Pack samples
Ship FEDEX Airbill #5822882531

1700 AES off site

NOT USED
DB

3/15/96
0815 AES on site Butler Morrison
08.30 JBR on site
Will excavate LF024 to assess fill materials for metals contamination

LF024
Fill; bricks, soil; at ≈ 8' found piping drum (crushed) and intact fuel tank (small < 10 gall) removed from fill; collected soil sample from clays below fill material LF024-2 [0930] Analyses, RCRA metals, VOC, SVOC.

Morrison collecting floodplain samples to delineate coal tar extent west of landfill.

0950 JBR flat bed truck on site to assist in moving drums, soil, steel girders.

1030 Collected water sample from gas tank found at LF024
GTANK1 analysis VOC

3/15/96
1130 Removed steel girders from east floodplain. Transported to Dixie Iron + Metal Co. on W. Washington St.

1115 WW10 : sediment sample from floodplain west of the landfill ; analysis VOC, SVOC

WW12 : [1145] sediment sample in floodplain west
Analyses VOC, SVOC

WW11 [1200] sediment sample in floodplain west
Analyses VOC, SVOC
1210 JBR has completed moving all drummed development water and drill cuttings to staging point on landfill.

1215 Break for lunch
1330 Back on site

1345 JBR moves fuel oil tank

3/15/96
from back (south end) of landfill and staged next to tanker truck.
Fuel oil tank is punctured; material at puncture smells like fuel oil residuals.

JBR continues to clear north end of landfill

1400 Rain begins, lightning.
1430 JBR off site
AES off site
1730 Return to Atlanta

NOT USED
DB

3/26/96 Clear 60°.
0900 Butler on site; to survey well locations and elevations, and sampling point locations.
0905 DP site; JBR has removed plastic and stained soils from hydraulic leak of 3/13.

1000 Kim Kilpatrick/AES on site
1020 Begin survey
1315 Break for lunch
1430 Back on site
Continue survey; wells, sampling points, landfill

3/26/96
Water/product levels

well	time	product	water
MW 1	0935	∅	4.12'
MW 2	0930	∅	10.46'
MW 3	0940	∅	10.65'
MW 3D	0945	23.12'-23.35'	10.40'
MW 4			
MW 5	0920	∅	8.60'
MW 6	0955	∅	11.02'
MW 7	0910	∅	4.20'

Coal tar visible on probe in MW 3D appears to flow over top of rock

Floodplain survey
WW 11
Flag 1 (ditch)
WW 12 (ditch)
Flag 2
Flag 3
Flag 4
Flag 5

1630 AES off site

3/27/96 Overcast 50°
0900 AES on site to sample soils at DP site.

0945 DP 26 25' W of fence
72' S of fence
Hand auger to 12"; no visible tar, no odor, water in hole at 10"
→ VOC, SVOC

1000 DP27 50' W of DP26
72' S of fence
hand auger to 12"; water just below surface (1") soil loam, clay, sand, faint odor.

1015 DP28 50' W of DP27
72' S of fence
Hand auger to 14", water at (1") loam, clayey sand, sand. faint odor
→ VOC, SVOC

3/27/96
1045 DP29 collected surface sample from area of no vegetation, strong coal tar odor, visible coal tar in soil at NE central sector 90' W of DP17 57' S of DP27
→ VOC, SVOC

1105 DP 9; returned to DP9 site to collect hand auger sample for verification
→ SVOC, VOC

Collect samples DP23

1210 DP 23 hand auger to 6 in sandy clay, no odor
→ VOC, SVOC

Ditch in NE corner of DP site, starts at W. Washington St. 43' South of fence corner flows West into DP site to center, low area; no exit
[PHOTOS]

3/27
1230 3 Tanks AST or UST on DP site
8' x 3.5'. Slightly crushed w/ holes; no liquids visible; no odors [PHOTOS]

Tanker truck; name visible on side.
"ASSOCIATED PETROLEUM CARRIERS, SPARTANBURG SC."

1300 AES off site

NOT USED
DB

4/17/96 Clear 65°
0945 Butler on site.
Met w/ Marvin Webster / ECA to discuss biological survey in wetland. Examined proposed sample locations. Use existing sample data where possible. One additional location needs sample collected. Will return to collect sample within 2 weeks.

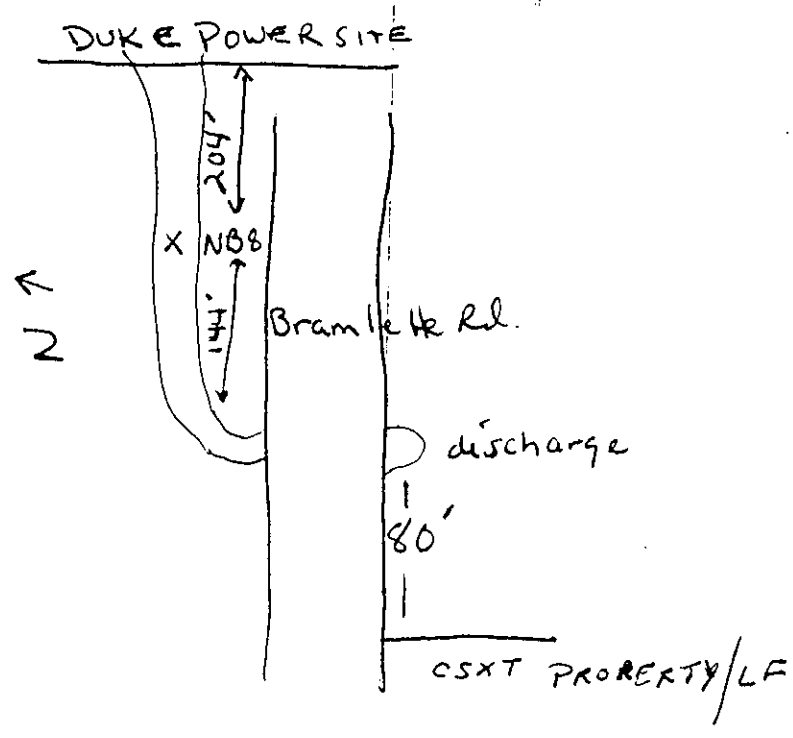

NOT USED
DS

4/24/96
1030 AES on site, Butler + McFadden: to sample floodplain soil at biological survey plot WW13

WW13 collected at 1115 by hand auger within sample plot boundaries.
Coal tar visible and odor present in clay soil 0-12".

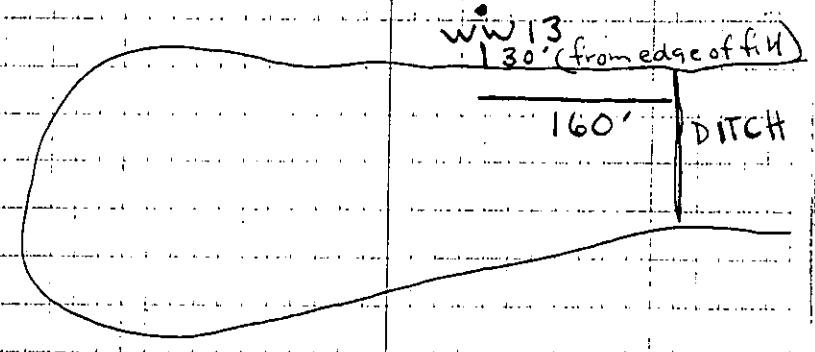

MW3D
WL = 10.52'
Product 23.22